Secure Solutions® Storage

SIN: 426-4G

General Services Administration

Federal Supply Service

Authorized Federal Supply List

Total Solutions for Law Enforcement FSC 84

Contract Number: GS-07F-0124Y Contract Period: December 1, 2011 through November 30, *2021*

For more information on ordering click on the FSS Schedules button at fss-gsa.gov.

Contractor's Information: Marvel Group, Inc., 3843 W. 43rd St., Chicago, IL 60632

Phone: 800-621-8846 Fax: 800-237-0358 Business size: Small TIN#06-1706435 Cage Code: 30216

www.marvelgroup.com

Prices Shown Herein are Net (discount deducted). See page WR2 for ordering information.

ON-LINE ACCESS to ordering information, terms and conditions, up-to-date pricing and the option to create an electronic delivery order through GSA ADVANTAGE!, a menu driven database system. The internet address for GSA ADVANTAGE is: http://GSAAdvantage.gov

GSA Federal Supply Schedule

Weapon Racks Customer Information

How to place an order

Toll Free Fax

1 (800) 237-0358

Mail

Marvel®
Attn. Customer Service
3843 W. 43rd St.
Chicago, IL 60632

1 (800) 621-8846
1 (773) 843-2900

Provide the following information

1. Purchase order number
2. "Bill to" and "ship to" name and address
3. Description
4. Quantity

Confirm all phone orders in writing within 3 days. It is the purchaser's responsibility to check the *Marvel®* acknowledgment document for accuracy.

The following terms and conditions are hereby incorporated into this contract:
1A. SPECIAL ITEM NUMBERS: 426-4G
BASIC DISCOUNT : 61.5% excluding MFGL-RSS.
1B. LOWEST NET PRICES: Item number 426.4G: WRBS: $5.82
1C. NOT APPLICABLE
2. MAXIMUM ORDER: $200,000.00 Net Product
3. MINIMUM ORDER: None
4. GEOGRAPHIC COVERAGE: 48 contiguous states and District of Columbia
5. POINT OF PRODUCTION: Chicago, Cook, Illinois
6. DISCOUNT FROM LIST PRICE ARE SHOWN: (as net, with discounts already deducted)
7. QUANTITY DISCOUNTS: None
8. PROMPT PAYMENT TERMS: 1% 15(fifteen) Days, Net 30
9A. GOVERNMENT COMMERCIAL CREDIT CARD IS ACCEPTED
9B. ADDITIONAL DISCOUNT FOR PAYMENT BY GOVERNMENT COMMERCIAL CREDIT CARD IS NOT APPLICABLE
10. FOREIGN ITEMS: None
11A.TIME OF DELIVERY: 30 days A.R.O.
11B. EXPEDITED DELIVERY: Most items are available for Quick Ship in Five Days in limited quantities and finishes. See page 6 & 7 of contractor contract for details.
11C. OVERNIGHT AND 2 DAY DELIVERY AVAILABLE FOR SOME ITEMS: Contact Contractor
11D. URGENT REQUIREMENTS: Contact Contractor
12. F.O.B. POINT: Destination to receiving point within 48 contiguous states and District of Columbia (street or dock). Inside delivery is available at an additional charge.
13A. ORDERING ADDRESS: The Marvel Group, Inc., 3843 West 43rd Street, Chicago, IL 60632-3479
13B. ORDERING PROCEDURES: For supplies and services, the ordering Procedures, information on Blanket Purchasing Agreements (BPA's) are found in Federal Acquisition Regulation (FAR) 8.405-3
14. PAYMENT ADDRESS: The Marvel Group, Inc., 3267 Paysphere Circle, Chicago, IL 60674
15. WARRANTY PROVISIONS: Lifetime Warranty as shown
16. EXPORT PACKAGING CHARGES: Write or call for quotation
17. GOVERNMENT COMMERCIAL CREDIT CARD HOLDERS ARE INVOICED AT THE TIME OF SHIPMENT
18. TERMS AND CONDITIONS OF RENTAL, MAINTENANCE AND REPAIR: not applicable
19. TERMS AND CONDITIONS OF INSTALLATION: QUOTED ON INDIVIDUAL CASE BASIS
20. TERMS AND CONDITIONS OF REPAIR PARTS indicating date of parts price lists and any discounts from list prices (if applicable)
20A. TERMS AND CONDITIONS FOR ANY OTHER SERVICES: not applicable.
21. LIST OF SERVICE AND DISTRIBUTION POINTS: not applicable
22. LIST OF DEALERS: contact contractor
23. PREVENTATIVE MAINTENANCE: not applicable
24A: ENVIRONMENTAL ATTRIBUTES: Steel components contains 15% post consumer recycled steel.
24B. NOT APPLICABLE
25. DATA UNIVERSAL NUMBER SYSTEM: (DUNS) number: 005120050
26. CENTRAL CONTRACTOR REGISTRATION: Marvel® is registered in CCR

Gear Rapid Sanitizing System (RSS)

Kill up to 99.99% of pathogens and viruses on Masks and other PPE equipment utilizing a chemical-free, dry ozone process.

Sanitizing capacity (Military/ First Responders):

- 33 cubic feet *(60% greater than nearest competitor)*
- 32-35 tactical helmets, 21-24 tactical vests
- Processing capacity: 96-128 helmets/Masks per hour, 42-63 vests/hour
- Capacity will vary based on size of equipment.

Other features and benefits:

- *Proprietary ozone destruction technology enables optimum ozone levels and greatest bacteria kill rates.*
- Optional Ozone Distribution Piping for fabrics and other clothing or apparel.
- Ozone generator provides consistent ozone levels, even in high humidity or with damp gear.
- LCD touch screen display with Variable Timing Cycles and Data Collection Display. No need to download statistics to a flash card. View right on machine.
- Password authentication feature enables authorization codes for machine utilization.
- Select sanitizing cycles from 10 minutes, up to 60 minutes depending on sanitizing needs.

Safety features:

- Safety Approval: In addition to internal quality assurance procedures, each unit is individually inspected and approved by CSA designated agency to achieve CSA Standard SPE-1000-09 for electrical products.
- Industrial strength PLC controls ozone generation, distribution, destruction and monitors components. No failure-prone circuit boards utilized.
- Advanced ozone destruct technology: Ensures that ozone has reverted back to oxygen before the doors can be opened by the operator. Meets OSHA and MOL requirements.
- Electronic door lock: Door automatically locks during operation. Unit won't operate without door sealed.
- Circuit verification: Machine will not operate if safety component failure is detected.
- Stainless Steel chamber: Ozone resistant stainless steel leaves no room for leakage or corrosion.
- Ozone-resistant door seal: EPDM seals around the single-sheet solid steel door.

Specifications:

Dimensions: Fits through standard 32" door
Exterior: 48" width x 34" depth x 64" height;
Interior: 47.5" x 29" x 46.5"
Weight: Approximately 500 lbs.
Casters: 4" Industrial Grade Casters enable mobility. Two casters lock for stability
Electrical: Std. 110/120 volt, 8 amps, GFCI Plug, ESA approved
Cabinet: Solid, 14 gauge, single-sheet, Stainless Steel (leak proof, rust proof)
Maintenance: Replace 2 UV bulbs every 12-18 months. Replacement bulbs sold separately

Model: MFGL-RSS
Rapid Ozone Sanitizing System
48"W x 34"D x 64"H
GSA Price: $19,137.46

Weapon Racks

Secure Solutions® Weapons Storage — SIN: 426-4G

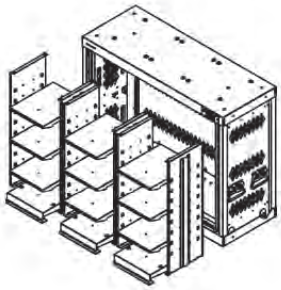

Model: MWR34BN
34” tall with 21 bins for optics/NVG
42”W x 16.25”D x 34”H

Price: $963.27

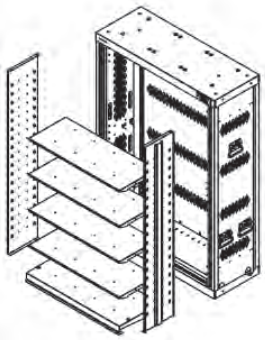

Model: MWR61SH
61” tall rack with 4 full shelves
42”W x 16.25”D x 61”H

Price: $961.54

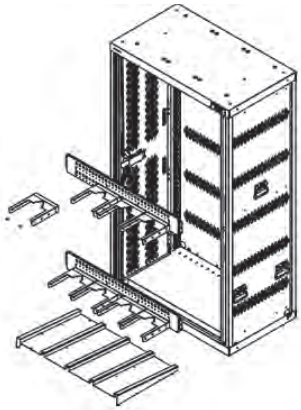

Model: MWR120MM
4 120MM Mortars
42”W x 24”D x 76”H

Price: $1,656.25

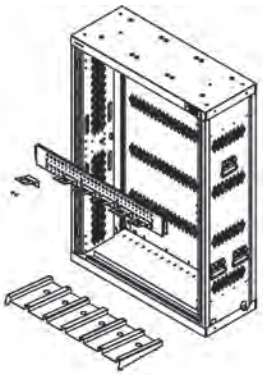

Model: MWR240B
6 M240B’s
42”W x 16.25”D x 61”H

Price: $938.40

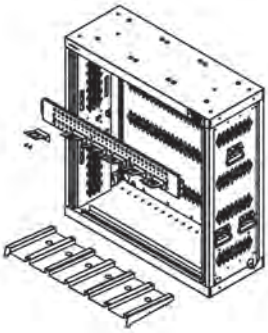

Model: MWR249
6 M249’s
42”W x 16.25”D x 45”H

Price: $787.71

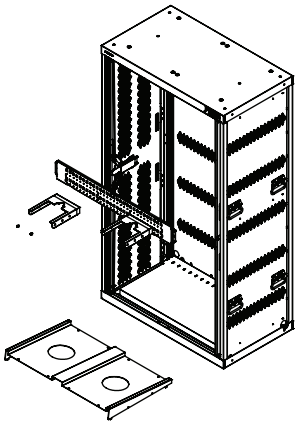

Model: MWRTOW
2 TOW’s
42”W x 24”D x 76”H

Price: $1,848.00

Weapon Racks

Secure Solutions® Weapons Storage — SIN: 426-4G

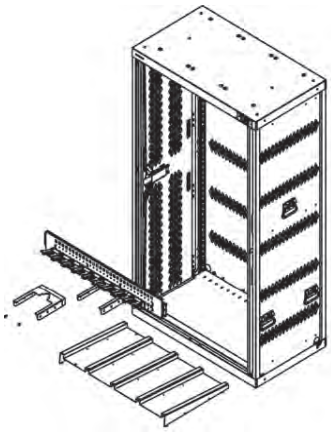

Model: MWRCLU
2 CLU Javelins
42”W x 24”D x76”H

Price: $1,539.11

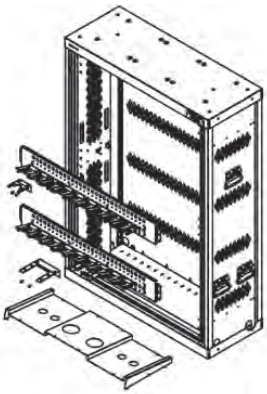

Model: MWRM2
2 M2’s plus 4 spare barrels
42”W x 16.25”D x 61”H

Price: $941.90

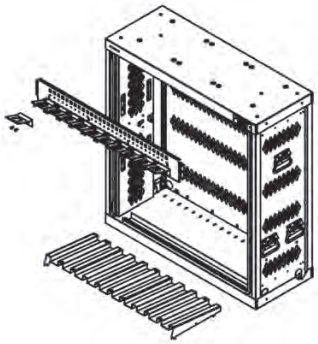

Model: MWRM4-16-500
10 M4’s/M16’s/M500’s
42”W x 16.25”D x 45”H

Price: $810.81

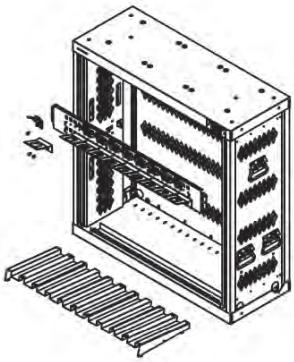

Model: MWRM4-16-500M9
10 M4’s and 9 M9’s on pegs
42”W x 16.25”D x45”H

Price: $870.58

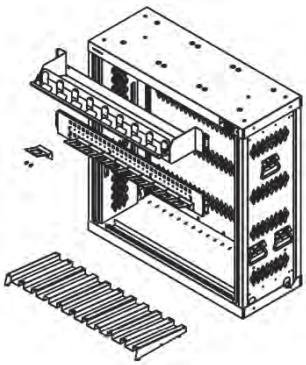

Model: MWRM4-16-500M9T
10 M4’s and 9 M9’s in a tray
42”W x 16.25”D x 45”H

Price: $908.99

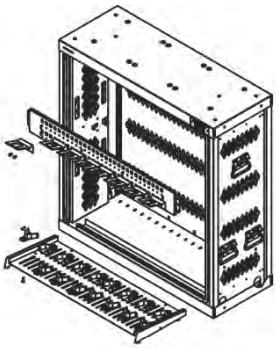

Model: MWRM4-16-500M249
Combination M4’s and M249’s
42”W x 16.25”D x 45”H

Price: $836.22

Weapon Racks

Secure Solutions® Weapons Storage — SIN: 426-4G

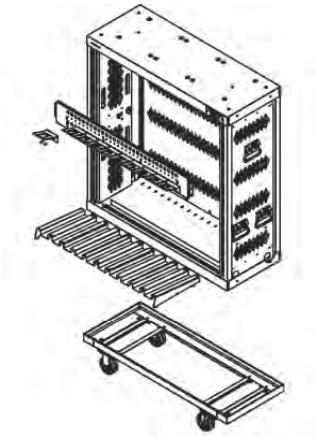

Model: MWRM4-16-500MOBILE
10 M4'S on a caster cart
42"W x 16.25"D x 45"H

Price: $984.06

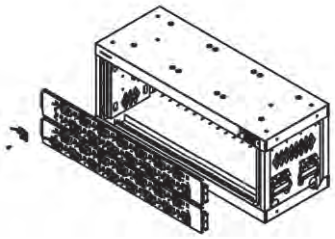

Model: MWRM930
30 M9'S on pegs
42"W x 16.25"D x 18"H

Price: $802.15

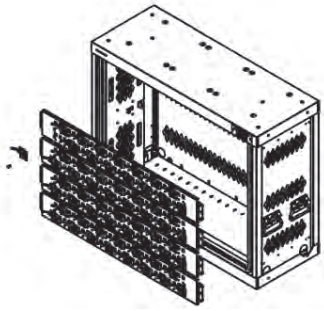

Model: MWRM960
60 M9's on pegs
42"W x 16.25"D x 634"H

Price: $1,113.42

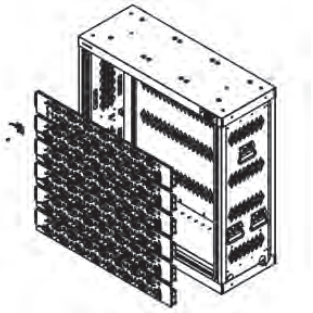

Model: MWRM990
90 M9's on pegs
42"W x 16.25"D x 45"H

Price: $1,410.25

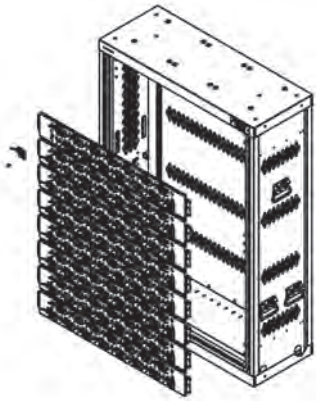

Model: MWR9120
120 M9's on pegs
42"W x 16.25"D x 61"H

Price: $1,779.28

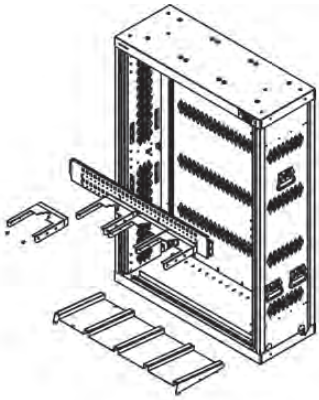

Model: MWRMK19
4 MK19's
42"W x 16.25"D x 45"H

Price: $926.31

Weapon Racks

Secure Solutions® Weapons Storage — SIN: 426-4G

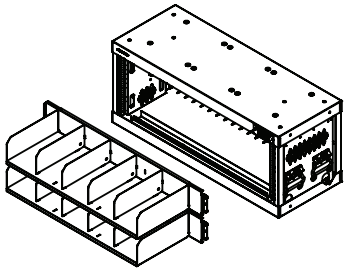

Model: MWR18BN
18” tall with 10 bins for optics/NVG
42”W x 16.25”D x 18”H

Price: $754.60

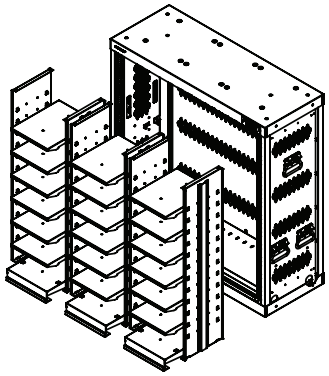

Model: MWR45BN
45” tall with 21 bins for optics/NVG
42”W x 16.25”D x 45”H

Price: $1,159.04

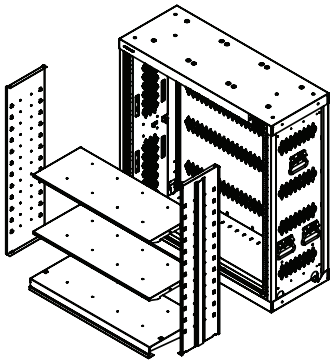

Model: MWR45SH
45” tall rack with 2 full shelves.
42”W x 16.25”D x 45”H

Price: $768.65

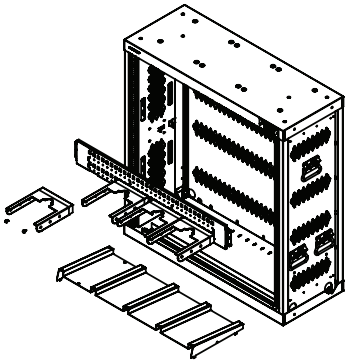

Model: MWR60MM
4 60MM Mortars
42”W x 16.25”D x 61”H

Price: $810.81

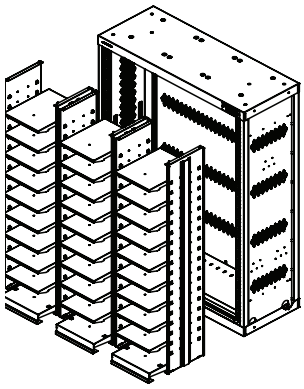

Model: MWR61BN
30 bins for optics
42”W x 16.25”D x 61”H

Price: $1,433.93

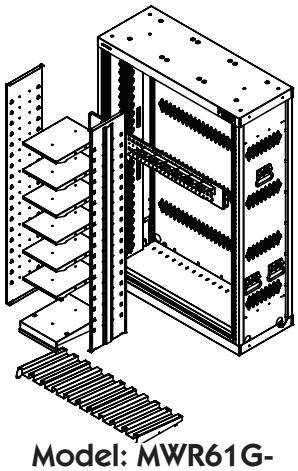

Model: MWR61G-6BN6
6 guns with bin storage
42”W x 16.25”D x 61”H

Price: $1,079.93

Weapon Racks

Secure Solutions® Weapons Storage — SIN: 426-4G

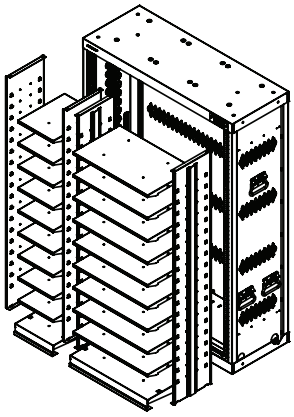

Model: MWR61S-23BN13
Cabinet with 10 bins and shelves
42”W x 16.25”D x 61”H
Price: $1,262.42

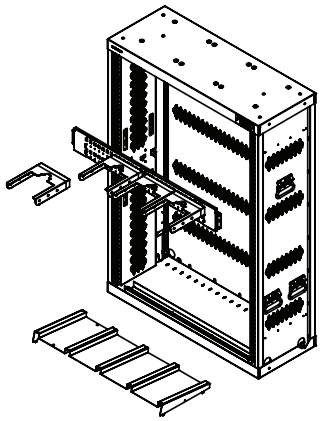

Model: MWR81MM
4 81MM Mortars
42”W x 16.25”D x 61”H
Price: $926.31

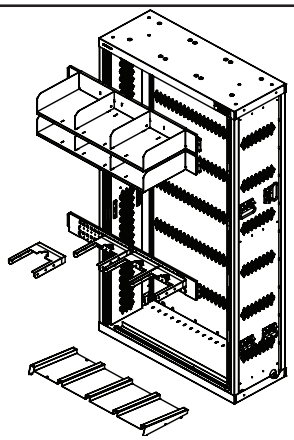

Model: MWR81MM SH
4 81MM Mortars
42”W x 16.25”D x 84”H
Price: $1,732.50

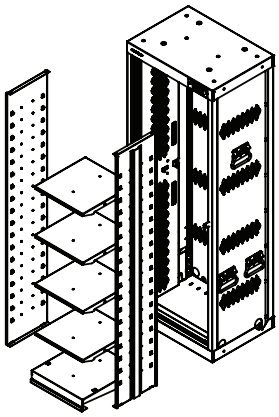

Model: MWR6122SH
Locker type cabinet
22.5”W x 16.25”D x 61”H
Price: $962.50

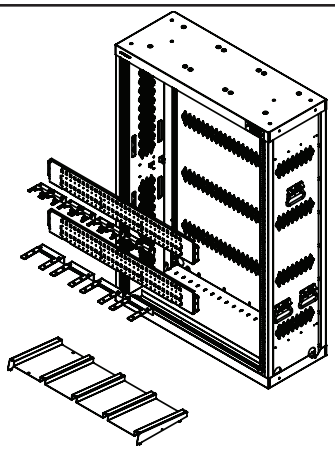

Model: MWRM2(4)
4 M2’s plus spare barrels
42”W x 16.25”D x 61”H
Price: $995.03

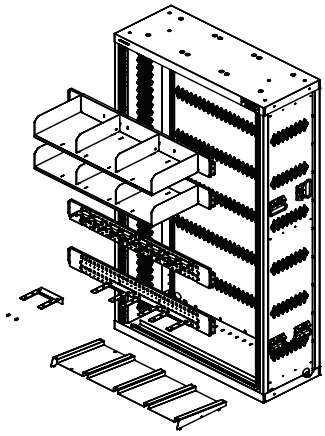

Model: MWRM2(4) SH
4 M2’s in rack with bins
42”W x 16.25”D x 84”H
Price: $1,636.25

Weapon Racks

Secure Solutions® Weapons Storage — SIN: 426-4G

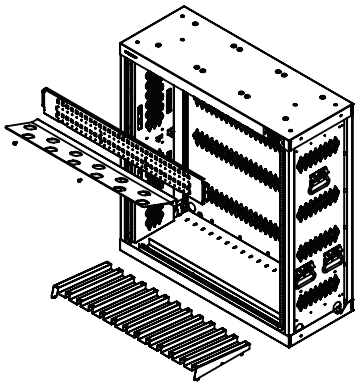

Model: MWRM4-12
12 M4's/M16's
42"W x 16.25"D x 45"H

Price: $868.56

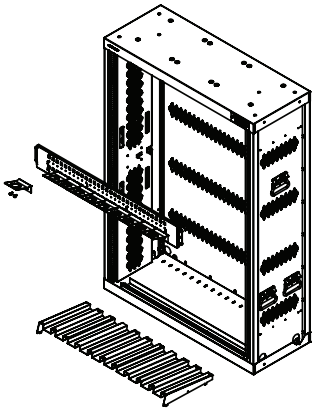

Model: MWRM14/ M110/M24
10 each in any combination
42"W x 16.25"D x 61"H

Price: $965.58

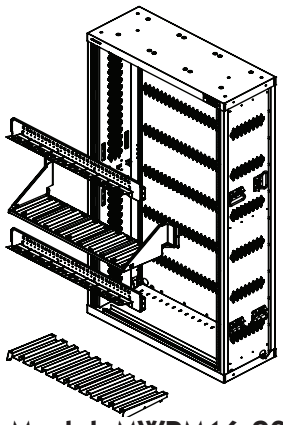

Model: MWRM16-20
20 M4's
42"W x 16.25"D x 61"H

Price: $1,636.25

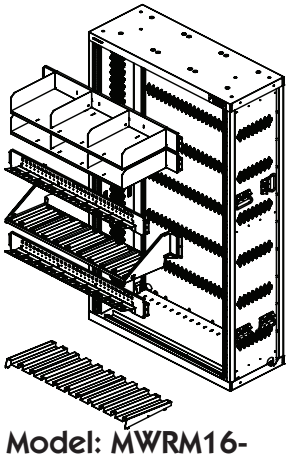

Model: MWRM16-20SH
20 M4's in rack with bin
42"W x 16.25"D x 84"H

Price: $1,636.25

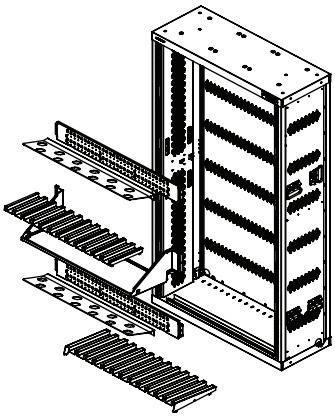

Model: MWRM16-24
24 M4's
42"W x 16.25"D x 84"H

Price: $1,636.25

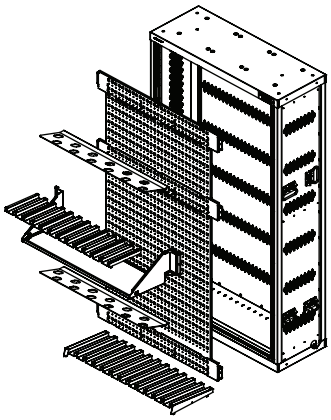

Model: MWRM16-24BP
24 M4's with back for M9 placement
42"W x 16.25"D x 84"H

Price: $1,780.63

Weapon Racks

Secure Solutions® Weapons Storage — SIN: 426-4G

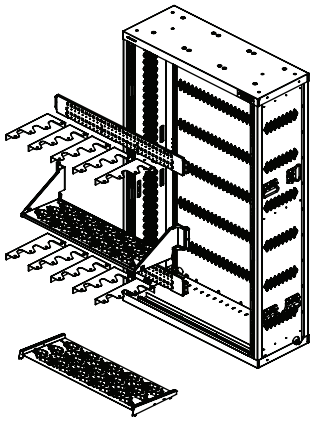

Model: MWRM16-30SC
30 M4/M16
42”W x 16.25”D x 84”H

Price: $1,828.75

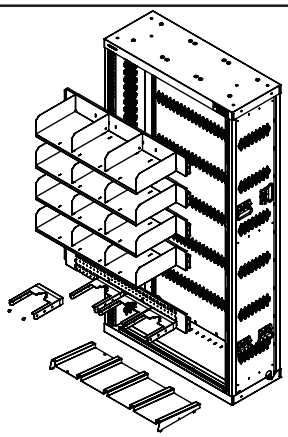

Model: MWRM-60MMSH
4 60MM Mortars
42”W x 16.25”D x 84”H

Price: $1,732.50

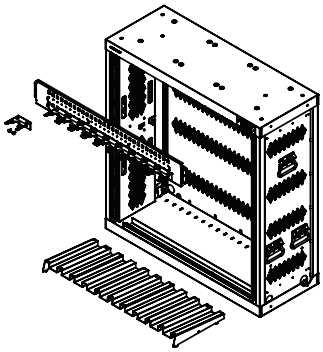

Model: MWRM203/M500
10 M203 or shotguns
42”W x 16.25”D x 45”H

Price: $799.26

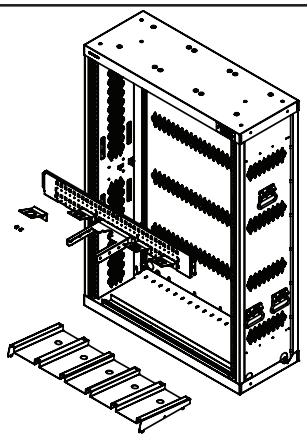

Model: MWRM240-MK19
1 MK19’s and 4 M240B’s
42”W x 16.25”D x 84”H

Price: $932.09

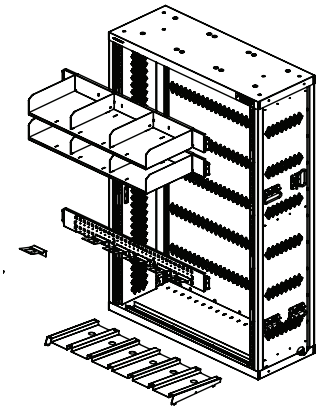

Model: MWRM240SH
6 M280B’s
42”W x 16.25”D x 84”H

Price: $1,636.25

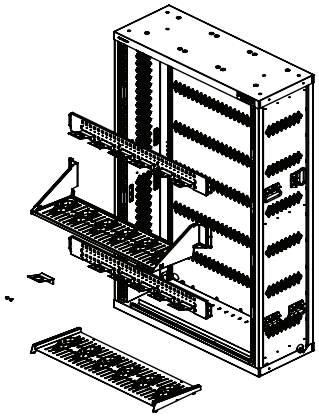

Model: MWRM249-12SC
12 M49’s
42”W x 16.25”D x 84”H

Price: $1.636.25

Weapon Racks

Secure Solutions® Weapons Storage — SIN: 426-4G

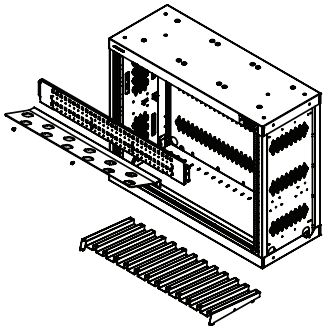

Model: MWRM434-12
12 M4's
42"W x 16.25"D x 34"H

Price: $825.25

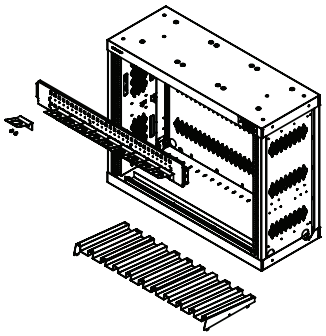

Model: MWRM434
10 M4's
42"W x 16.25"D x 34"H

Price: $767.50

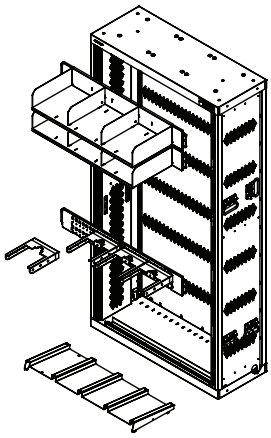

Model: MWRMK19SH
4 MK19's
42"W x 16.25"D x 84"H

Price: $1,636.25

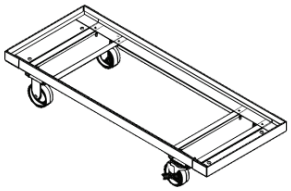

Model: WRC42GN
43"W x17"D x 7.5"H

Price: $176.25

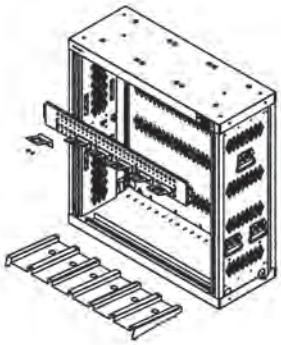

Build Your Own Weapon Rack
Designed specially for your equipment.
Call: 800-862-7835
Ask for Ken Wesolowski