OLYMPIA
STEEL BUILDINGS®

Quality, Strength, & Service

Factory Direct

Factory Direct **Huge Savings**

Our buildings are manufactured entirely in the United States with a 25-year steel mill backed warranty.

Olympia is recognized as one of the industry leaders in providing superior quality, service and durability at low prices.

If you need to build a simple garage or workshop, a warehouse, an industrial or commercial complex, a shelter for grain and livestock, an airplane hanger, a horse riding arena or even a worship space or family center, the skilled professionals at Olympia can make it happen at the best available price.

Olympia Steel Buildings are used in a variety of ways. View our most popular building designs on the following pages. Call today and have our expert building consultants design your custom building, suitable for almost any application you can dream of.

AS SEEN ON TV

Commercial 4
Churches 5
Steel Horse Barns 6
Farming 7
Trucking 8
Industry 9
Aviation 10
Warehousing 11
Garages & Workshops 12
The Factory 13
Framing 14
Color Chart & Panels 16

- **Direct Delivery Coast to Coast**
- **Factory In-House Engineering and Drafting Services**
- **Courteous Building Professionals Will Help You Bring in Your Building on Budget and on Time!**
- **Galvanized Secondary Framing (Girts and Purlins)**
- **Save 50% to 60% Over Traditional Construction Costs**
- **Totally Integrated Manufacturing Facility Produces a Complete Pre-engineered Steel Building**
- **25-Year, Steel Mill Backed, Rust-Through Perforation Warranty on AZ55 Galvalume® Roof**
- **Lifetime Warranty Against Rust on Stainless Steel Capped Roof Fasteners**
- **As Seen on National TV**

Call Today!

1-888-841-4508

Call today! Our expert building consultants are standing by **24 HOURS A DAY** - to answer your questions - get you **THE LOWEST POSSIBLE PRICE** - and help you choose the Olympia building that suits your needs!

Commercial

Olympia's expert building consultants will recommend the perfect building for your needs. It doesn't matter if you need a building for a small retail store or a giant office complex for a Fortune 500 Company.

The factory's engineers can design a building of any size suitable for any need imaginable. These buildings are virtually maintenance-free and built to withstand the worst that Mother Nature has to offer.

AS SEEN ON TV

Churches

If your congregation needs a new worship space, family center, gymnasium or classrooms, Olympia can custom design the building to meet your needs. In addition, Olympia's strict quality control department ensures that all buildings meet or surpass local building codes.

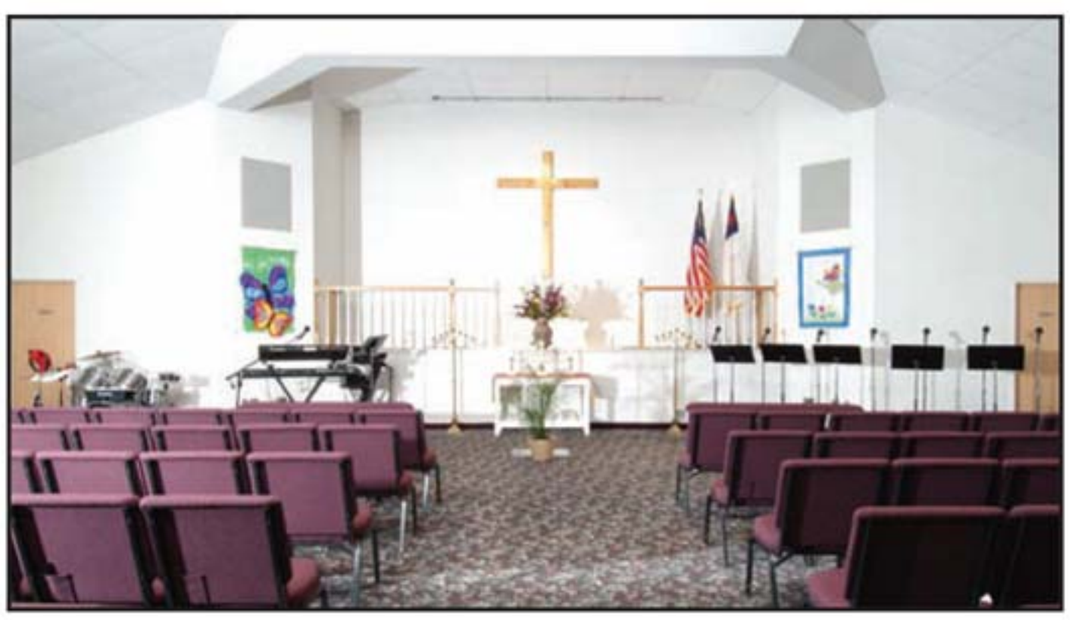

Call Today!

1-888-841-4508

Call today! Our expert building consultants are standing by **24 HOURS A DAY** - to answer your questions - get you **THE LOWEST POSSIBLE PRICE** - and help you choose the Olympia building that suits your needs!

Horse Barns & Arenas

Olympia buildings make good horse sense! Olympia can design a custom arena or stall complex to your exact specifications. With a 25-year warranty, easy bolt-up rigid frame construction and plenty of room for workshops and offices, you've got Olympia's TRIPLE CROWN guarantee.

AS SEEN ON TV

25 year warranty

Farming

Your equipment, grain, livestock and other valuable investments are safe, even from the harshest weather conditions, with an Olympia steel building. Our buildings give you that sense of security because they are engineered and built to the highest standards of quality.

Call Today!

1-888-841-4508

Call today! Our expert building consultants are standing by **24 HOURS A DAY** - to answer your questions - get you **THE LOWEST POSSIBLE PRICE** - and help you choose the Olympia building that suits your needs!

Trucking

Need some big steel for that big rig? When a single truck costs thousands of dollars, it makes sense to keep it protected. Olympia buildings are built super-tough to withstand years of heavy use. As your fleet grows, you can expand these buildings to virtually any length making your investment extremely cost effective.

AS SEEN ON TV

Call Today!

1-888-841-4508

Call today! Our expert building consultants are standing by **24 HOURS A DAY** - to answer your questions - get you **THE LOWEST POSSIBLE PRICE** - and help you choose the Olympia building that suits your needs!

Industry

Olympia is committed to serving United States industry. Our buildings are constructed entirely of the highest grade US steel available today. No factory is too large, no requirement is too complex for the factory's engineers. Speak with an expert building consultant today to get a great price for your custom-built industrial use building.

AS SEEN ON TV

Aviation

No need to clip your wings after you've earned them! The factory's engineers can design your new hangar with column-free interiors up to 200 feet wide with unlimited lengths.

Combined with easy construction, extreme durability and the ability to expand your building any time, Olympia buildings can make your wild blue yonders brighter than ever before.

Warehousing

Olympia is the solution to your warehousing woes. Our buildings save you time and money by reducing traditional construction time associated with brick, wood or block structures. Each building is fully customizable with a variety of ceiling lights, windows, insulation, doors and more.

AS SEEN ON TV

Garages & Workshops

Keeping your car or truck sheltered from damaging rain, snow and sun has never been so easy and cost effective.

Our residential steel garages go up faster than traditional brick or wood frame garages. With eleven vivid colors and four matching trim colors, it's easy to match your home's exterior.

If you have always dreamed of having your own garage or backyard workshop, let us help you today.

AS SEEN ON TV

The Factory

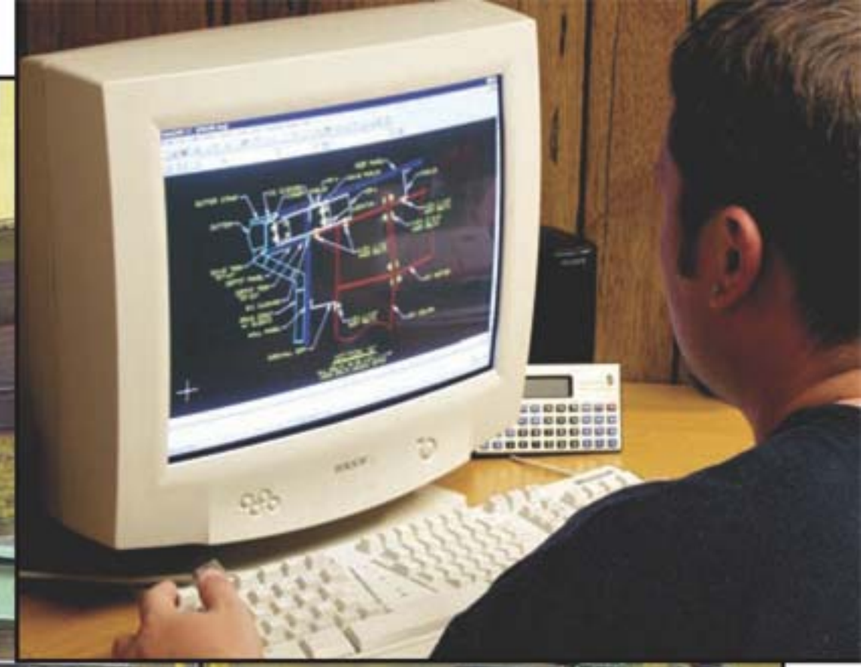

The factory's manufacturing facility is one of the most sophisticated in the steel building industry. The engineers, advanced computer technologies and precise machinery exemplify the commitment to quality.

Because the factory is automated using CNC technology, they are able to produce higher quality components in less time than competitors, which allows us to pass substantial savings to you.

Framing

Olympia's buildings come with a 25-year warranty on AZ55 Galvalume® roof panels, a lifetime warranty on stainless steel roof fasteners and the siliconized polyester colored coating on the walls and trim carries a 40-year warranty from the paint manufacturer.

All metal buildings come standard with galvanized secondary framing and extended weather-tight PBR roof panels.

PURLIN

EAVE STRUT

ENDWALL RAFTER

ENDWALL GIRT

DOOR HEADER

DOOR JAMB

WINDOW JAMB

WINDOW HEADER

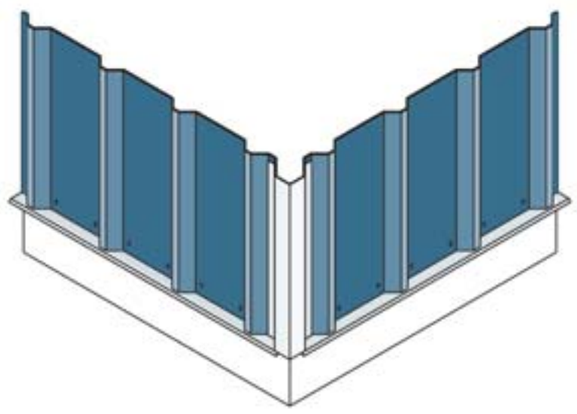

Corner Trim
1 1/4" deep rigid-rib design construction results in beauty and strength.

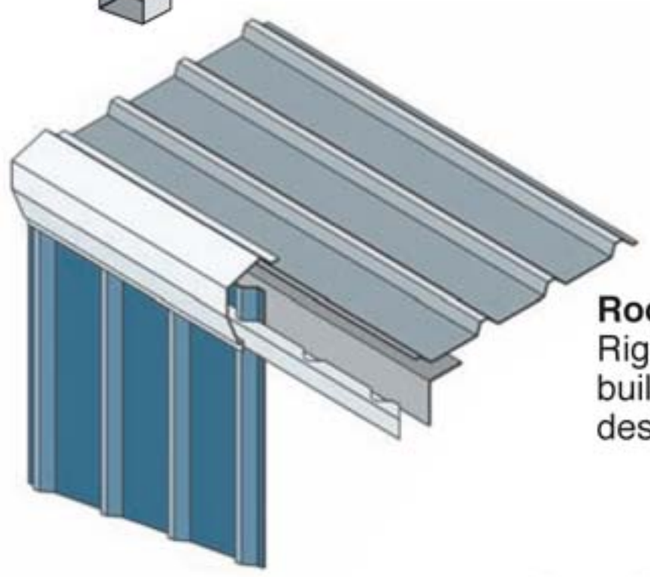

Roof Panels
Rigid-rib panels pre-cut to building dimensions and designed for long life.

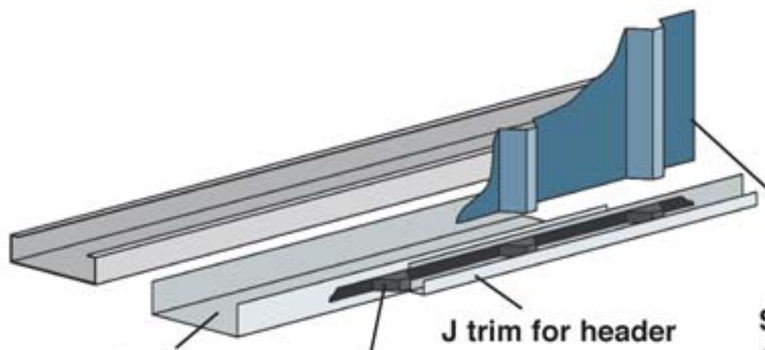

header cover

foam closure

J trim for header

Sheeting in J trim over foam closure

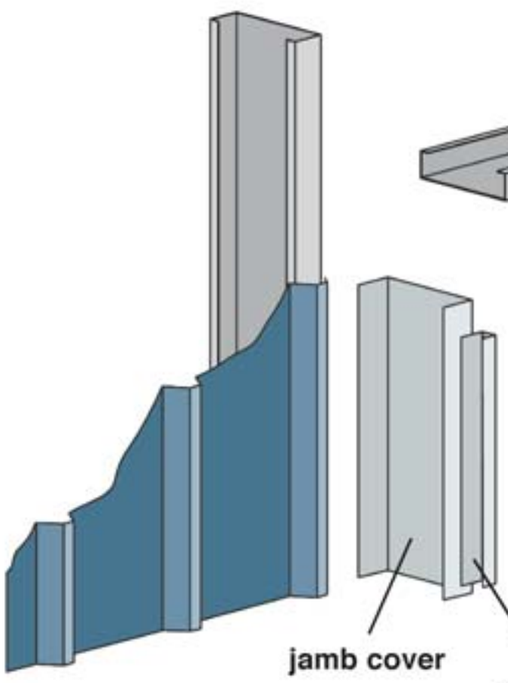

jamb cover

J trim for jamb

Framed Openings
Overhead doors can be mounted without the need for additional steel or hardware.

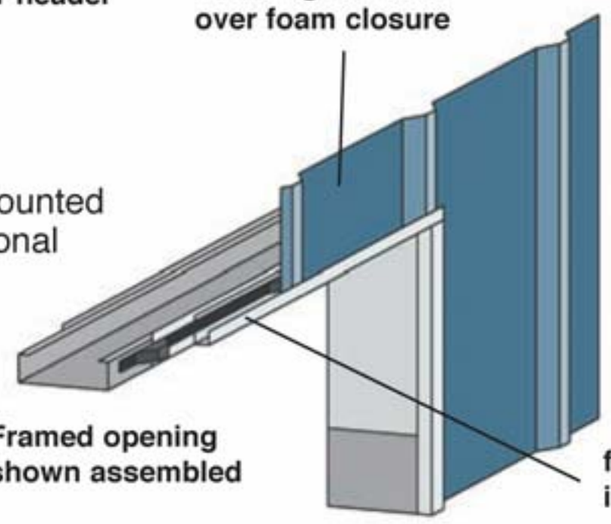

Framed opening shown assembled

foam closure in J trim

Base Trim
Provides maximum weather protection, an attractive finished appearance and long life due to a Galvalume base angle and unique design.

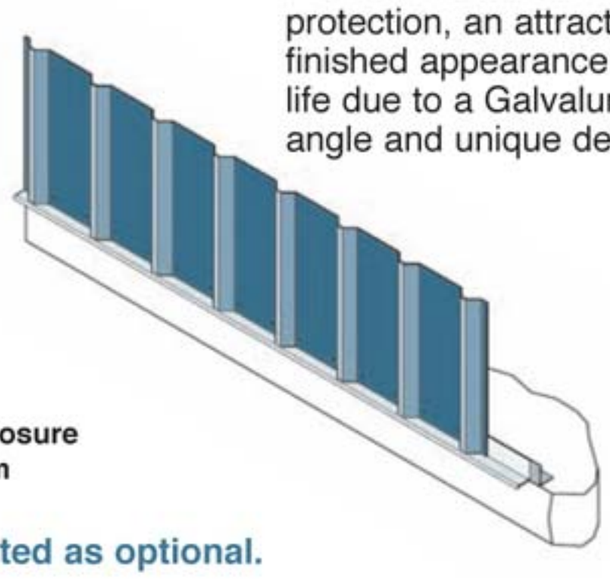

Every Olympia building comes standard with all items shown, unless noted as optional.

Panel Colors

SAND GOLD

BRITE RED

POLAR WHITE

LIGHTSTONE

PEARL GRAY

SLATE GRAY

HAWAIIAN BLUE

SAHARA TAN

RUSTIC RED

BURNISHED SLATE

FERN GREEN

Olympia buildings are precision coated with paint from Akzo Nobel, a leading producer of paint, finishes and synthetic resins for industrial applications. Choose from **eleven panel and trim colors** (above). Some other non-standard colors may be available depending on inventory.

Panels

"PBR" PANEL

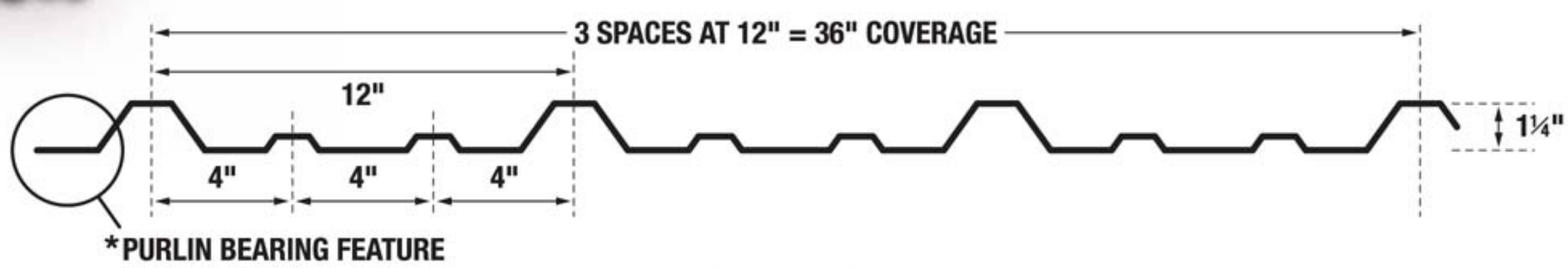

"R" PANEL

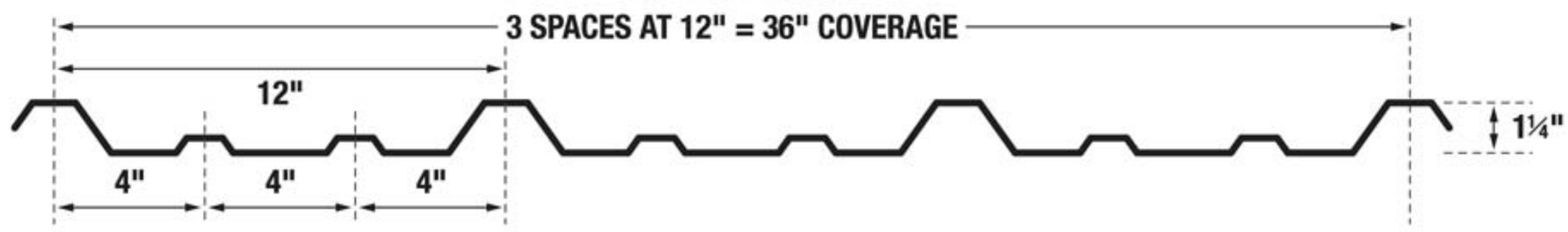

"REVERSE R" PANEL

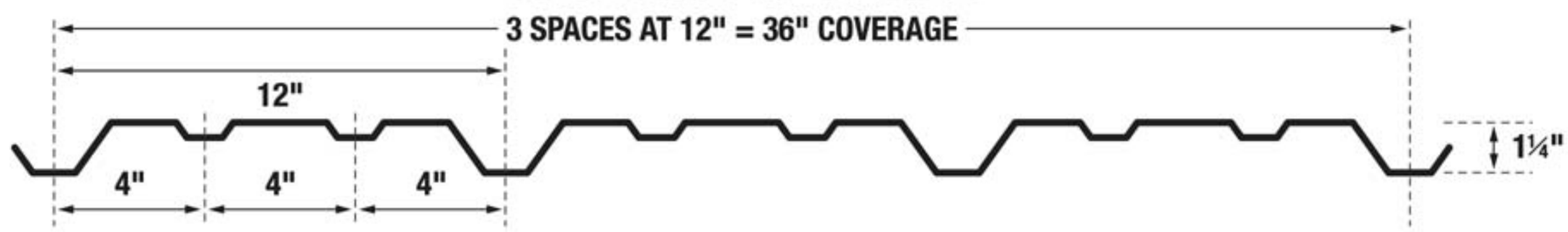

Our 26 gauge Purlin Bearing Rib Panels are far stronger than the commonly used "R" roof panels because they have an extended overlap to provide a leak proof seal. PBR roof panels come standard on all Olympia steel buildings.

OLYMPIA STEEL BUILDINGS®

1-888-841-4508

©2006 Olympia Steel Buildings® All Rights Reserved.

OLYMPIA STEEL BUILDINGS®

-vs-

The Competition

The Olympia Difference

Valued Customer,

Thank you for choosing Olympia Steel Buildings as the solution to your building needs. You can be confident that the Olympia team of professionals will provide you the very best products and service at the lowest competitive price in the market today. You, our valued customer, are number one on our list of priorities.

We know our business. For many years Olympia has provided quality pre-engineered steel building systems to commercial, industrial and agricultural customers. As an Olympia customer, you will receive prompt, accurate technical advice and superior customer service from our trained team of specialists. Your building package will include engineered computer drawings and a comprehensive erection manual. The factory design and detailed engineering of an Olympia building ensures that it will last a lifetime.

The service you receive after the initial sale is the true measure of your building provider's performance. Our team of experts is dedicated to customer service and making your building project the satisfying experience you deserve. Our goal at Olympia is to serve you, our customer. Our motto: "Made of Steel, Built on Service"

What We Do For You

Personalized Service

- There is no waiting. Our technicians will respond to your inquiry, discuss your needs and have your building priced to your specifications within 24 hours.
- Your experienced service representative will guide you through the entire project from purchase to completion.
- Do it yourself and save. Simple, easy erection procedures and our technical assistance will have your building up in no time.

Precision Manufacturing and Design

- State-of-the-art computerized drafting and design meet or exceed all industry standards.
- You will receive a complete building package that assembles with ease.
- Engineered permit plans, erection drawings and an easy to understand building manual are provided with every building.

Efficient Scheduling and Delivery

- Service representatives will monitor your progress to properly coordinate the arrival of your building.
- Community freight and share loading greatly reduce delivery cost.

Quality Control and Communication

- Olympia pledges to provide the best quality material and workmanship available in the industry.
- Our speed track communication system will always have a technician available to assist you.

All buildings are not created equal. Let us show you why.

Best regards,

The Service Department

OLYMPIA STEEL BUILDINGS.

400 Island Avenue • McKees Rocks, PA 15136
www.olympiabuildings.com
1-888-449-7756

©2008 King David Interactive Corp. All Rights Reserved.

Olympia's Rigid Frame Options

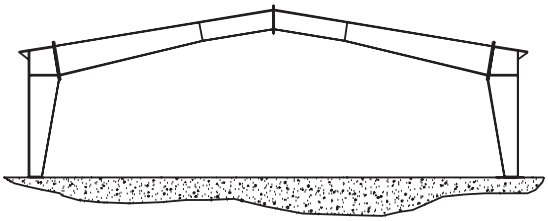

Clear Span

Floor areas that must be free of all columns and supports require clear span framing. This design is ideal for gymnasiums, aircraft hangars, riding arenas and showrooms.

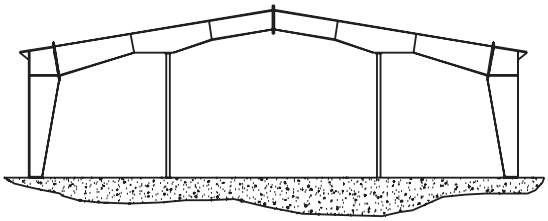

Multi-Span

When columns will not interfere with the function of a building, multi-span framing is used. Multi-span buildings provide a maximum span at a lower cost and are used for manufacturing facilities and warehouses.

With Olympia's multi-span framing, the number of spans may vary from a minimum of two to an unlimited maximum number of spans.

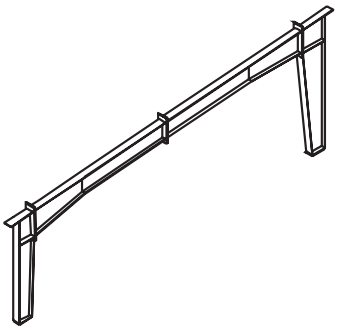

Single Slope

Single slope framing is used when it is advantageous to have one-way roof drainage and column-free floors. This design is appropriate for storage, manufacturing facilities, retail stores, office complexes, and strip malls.

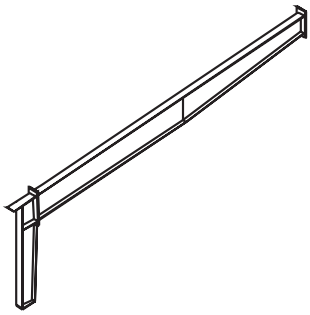

Lean-To

Lean-to construction is an economical way to increase the width of an existing building or add on to a new building. Some common uses of this type of framing include: equipment storage, stalls for animal confinement, open-roof systems, canopies and office space adjacent manufacturing facilities.

Olympia's Roof Coating
(AZ55 Galvalume®)

Olympia's roof coating is AZ55 Galvalume®. The coating requires no maintenance or painting and it retains its original luster. It is comprised of 55% aluminum, 44% zinc and 1% silicone. The greater aluminum content creates a higher resistance to rust.

There is a 25-year perforation warranty backed by the steel mills. If a hole rusts through a panel, the steel mill will replace the panel.

Competition's Roof Coating

Some companies use an AZ50 coating on their roof panels with only has a 50% aluminum content. They offer a 20-year perforation warranty if a hole rusts through a panel, five years less than the warranty offered by Olympia.

Some other companies use a zinc-galvanized coating, which contains no aluminum. Roof panels with this coating will rust and corrode causing holes to form and leaks to develop.

Olympia's Roof Fasteners

If the fastener is not compatible with the roof, the steel mill will void the warranty. Olympia's roof fasteners are surgical stainless steel, supplied with an assembled neoprene washer and carry a lifetime warranty against rust. The fasteners are 18 parts chrome and 8 parts nickel and will not rust, tarnish, turn gray or black.

Competition's Roof Fasteners

Some companies use zinc fasteners, which will rust - voiding the roof warranty. Others also provide a long-life alloy screw that can prevent rust, but will oxidize, turn dark gray or black making the building unattractive.

Olympia's PBR Roof System (Purlin Bearing Rib)

Olympia's PBR roof system provides a full overlap, preventing water from leaking into the building during storms when strong winds force rain against the overlap. Where the sheeting overlaps, the panel runs all the way to the bottom of the corrugation and along the bottom like a reversed "L." The top PBR panel resembles a "Z" and overlaps the bottom panel providing additional strength as well as protection against leakage.

Competition's "R" Panel Roof System

Some of Olympia's competitors use an "R" panel roof system. The overlap only extends 1/3 of the way into the corrugation of the connecting sheet and is not sufficient to give strength to the joint.

Water can build up in the corrugation where the panels overlap. Strong winds can push this built up water through the overlaps and into the building causing tremendous leaks.

Olympia's Roof Panels

Olympia's roof panels are made of 26-gauge steel with a yield of 80,000 PSI and a huge corrugation depth of $1\frac{1}{4}$". The strength of the steel together with the high PSI yield and deep corrugation create tremendous protection against strong winds and heavy snow loads.

The roof panels are wind rated to meet Florida code. The Florida code number is FL-3722-R1.

Competition's Roof Panels

The thickness of the steel panels on the sidewalls and roof of some competitors' buildings is 29-gauge steel. These buildings are not as strong and are less durable since the steel is 32% lighter than the 26-gauge steel utilized by Olympia. The competition's corrugation is $\frac{5}{8}$" in depth, half the depth of Olympia's $1\frac{1}{4}$" corrugation. Therefore, the Olympia steel panel has twice the strength.

Some companies are not wind rated and do not have a Florida approval number.

Olympia's Roof Mastic (sealant)

Olympia uses a mastic tape as a sealant on its panels. The side overlaps have a 1" wide flat mastic strip and the end panels have a 1" wide double bead sealant strip that create a watertight seal.

During drilling, the large 1" width enables the roof fasteners not to miss the mastic. Fasteners can easily perforate the sealant creating the necessary seal.

Competition's Roof Mastic

The mastic used on the competition's roof panels is only $^3/_8$" or $^1/_2$" in width and cannot ensure a watertight seal. Strong winds can force rain against the panels and through the overlap into the building causing leaks.

Fasteners have a greater risk of missing the narrower mastic thus failing to create the necessary watertight seal with the screw.

Olympia's Girt and Purlin Rust Protection

Olympia's girts and purlins have a hot dipped galvanized coating applied at the steel mill. This coating protects against rust and prevents ugly rust streaks from forming on the interior panels.

Competition's Girt and Purlin Rust Protection

Other companies use a red oxide primer, which encourages corrosion. Streaks of rust will form on the interior panels making the building unattractive.

Streaks of rust from red oxide primer on purlins.

Streaks of rust from red oxide primer on girts.

Olympia's Girt and Purlin Connections

Precision computer controlled machinery punches the holes in the flanges of the beams that form the rafters at the factory. You simply bolt the purlins directly to the flange of the rafter beams at the job site.

The same accurate machinery punches the holes in the column flanges used on the sides of the building. Girts are easily bolted to the column flanges. Concern created by misaligned or bent clips is eliminated, since no clips are required.

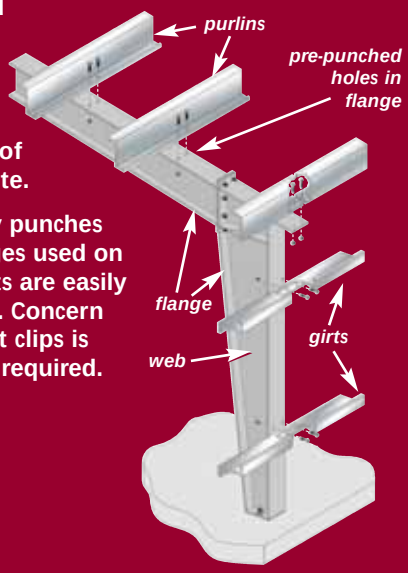

Competition's Connections

Some companies weld clips to rafter beams and columns so that the girts and purlins can be bolted to the clips. This system is used due to a lack of sophisticated equipment needed to precisely punch holes in the rafter beams and columns.

Problems with clips include:

1. Girts and purlins will not fit on the building when clips are often misaligned. When this occurs, the clips must be removed and welded back onto the rafter beams or columns.
2. Because clips are only welded to the beams, they are often bent or the weld is broken during shipment. Welding clips is not structurally sound, lacks quality control and creates problems during erection.

Olympia's Rigid Frame Construction

The web of the rafter beams and columns is a solid steel plate design and the flanges on the sides of the web are made of solid steel bar stock. The frames are manufactured in an "H" configuration using automated continuous welding equipment. An attractive gray oxide primer is applied to the frames.

Olympia uses a minimum of $^{1}/_{4}$" flange thickness. This stops the beam from bowing or the flange from becoming wavy.

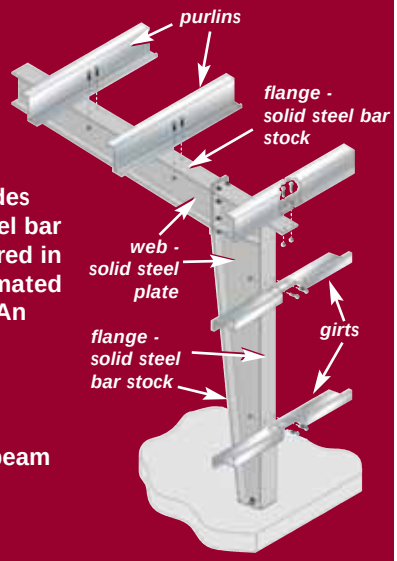

Competition's Rigid Frame Construction

Some competitors use web trusses.

Some companies use a $^{3}/_{16}$" flange thickness. This causes the beam to bow or the flange to become wavy.

Olympia's Quality Control

The entire building, as well as the frames, is designed to meet ASTM International (American Society for Testing and Materials) and AISC (American Institute of Steel Construction) standards by in-house certified professional engineers. The permit drawings are stamped and sealed by the in-house engineers who are licensed in the states where the permits are issued. The engineering software program is not data based but is driven by engines that actually create and design a building. Olympia's drafting detailing software program creates the permit, shop and construction drawings. All of these drawings are detailed by in-house professional draftsmen and all of the factory welders are certified.

Competition's Quality Control

Some companies only make components and have to purchase the frames from a frame maker resulting in poor quality control. Other companies make the frames, but have to purchase the sheeting, girts, purlins and all of the remaining components from another company, which also results in poor quality control. Many of the companies do not have in-house engineers and rely on outside consulting engineers often resulting in time delays and sometimes in poor design. Some companies do not meet ASTM or AISC standards. They do not have licensed welders and must either hand weld or use semi-automatic welding equipment, requiring hand welding, again resulting in poor quality.

Olympia's Wind Bracing

Olympia uses sturdy diagonal bracing consisting of heavy steel cables or steel rods. The diagonal bracing forms an "X" configuration in the brace bay and is attached to the webs of the columns and rafter beams. When diagonal bracing cannot be used because of door openings, heavy portal braces are used that are made of welded H-beams. These bracing methods transfer all the wind force into the building structure, which means there is no stress on the screws that attach the panels to the girts and purlins. These braces stop the building from swaying in any direction from strong winds and prevent the building from collapsing.

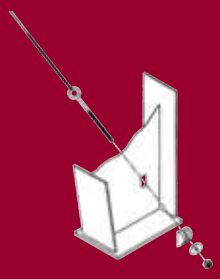

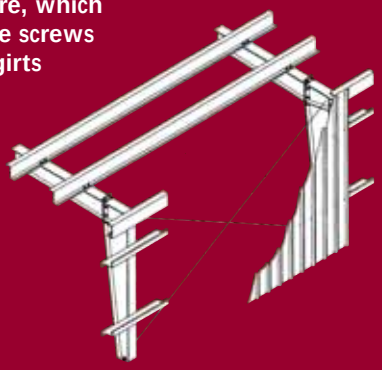

Competition's Wind Bracing

Many competitors use diaphragm bracing (panel shear). The sheeting on the side is supposed to act as bracing putting the entire wind load on the screws that attach the roof and wall panels to the building structure. This stress will eventually cause the screw holes in the panels to become enlarged resulting in leakage. Future door openings cannot be placed on the sides of the building as all the diaphragm action would be lost and the building could collapse. The wall sheeting does not transfer the wind force to the building structure and strong winds could cause the building to sway and/or collapse.

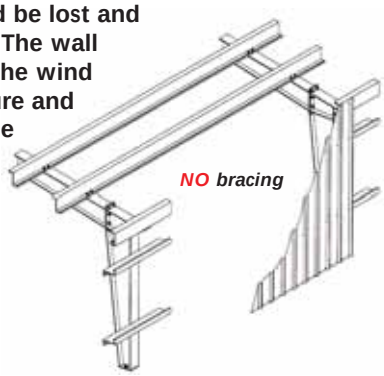

Olympia's Painted Sidewall Panels

The paint on Olympia's sidewall panels has a 40-year warranty against chipping, cracking, peeling or blistering. It is a siliconized polyester coating.

A substrate galvanized coating beneath the paint provides further protection against rusting.

The painted sidewall panels are wind rated to meet Florida code. The Florida approval number is FL-3985-R2.

Competition's Painted Sidewall Panels

Some companies only offer a 10-year paint warranty on the sidewall panels. Few offer a 20-year warranty on the paint.

Some companies' sidewall panels are not wind rated and do not have a Florida approval number.

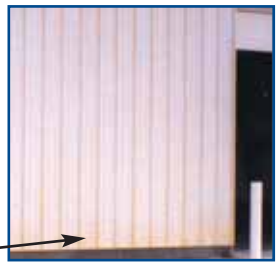

Olympia's Fasteners

All of the sidewall panels utilize screws that come assembled with neoprene washers. The washers eliminate the potential for rust by preventing damage to the sheeting, such as cracking paint, due to over-tightened screws. These washers also prevent the screws from widening the holes causing leaks.

The stainless steel screws are 18 parts chrome and 8 parts nickel and have painted heads that match the color of the sheeting. They will not rust, tarnish, turn dark gray or black.

Competition's Fasteners

The screws for the sidewall panels do not come with washers to prevent over-tightening. Over-tightening causes holes to widen and paint to crack and chip creating a source for leaks and corrosion.

A long-life alloy screw may be provided and can prevent rust, but will oxidize and turn dark gray or black making the building unattractive.

Olympia's Foam Closures and Eave Trim

A foam closure strip is mounted on top of the eave strut. The inside closure is the same profile as the roof sheeting so that when the roof is attached a tight seal is created.

For additional protection against leaks, an outside foam closure is attached to the outside wall panel. To secure the entire assembly a metal eave trim closure is placed over the outside foam closure.

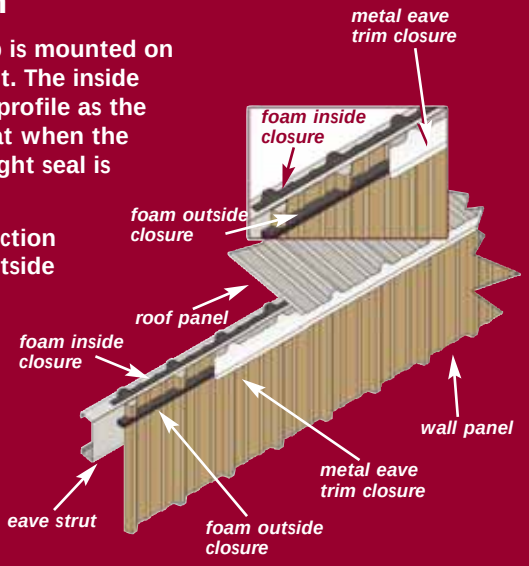

The top of the metal eave closure has the same configuration as the roof sheeting, therefore, when the metal eave closure meets the roof it creates a tight seal preventing leaks.

Competition's Foam Closures

Other building companies only use top foam inside closures. There is no foam outside closure and no metal eave trim closure. This causes the building to leak at the eave and the insulation to become wet causing sagging. Ultimately, the insulation WILL need to be replaced.

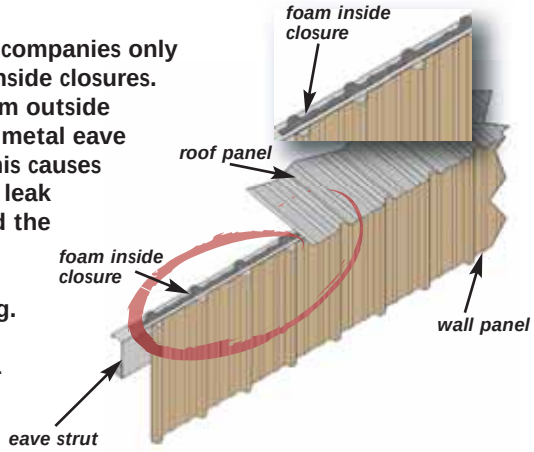

Olympia's J Trim

Olympia not only supplies J trim to cover the cut edges of the wall panels around the door openings, but also includes jamb covers for the galvanized jambs and a header cover for the galvanized header. This complete trim package enhances the beauty of the building.

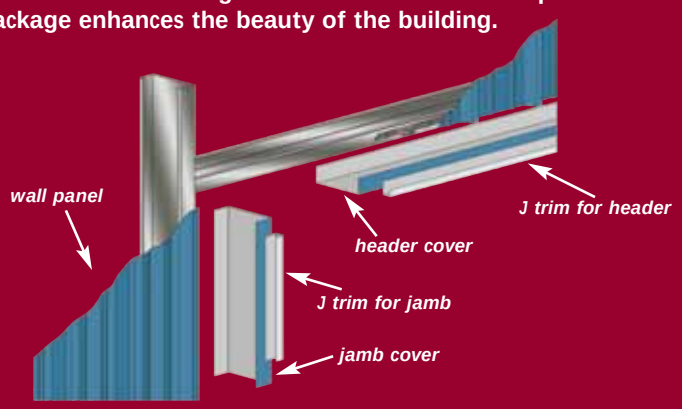

header and jamb cover supplied at NO CHARGE

A foam closure is placed inside the header J trim to prevent leaks from the top of the door opening.

foam closure supplied at NO CHARGE

Competition's J Trim

Other companies supply the J trim for the side and top of the cut-away opening, but do not include the header or jamb covers. The jambs and the header are not galvanized and have only an oxide primer, which will rust detracting from the appearance of the building.

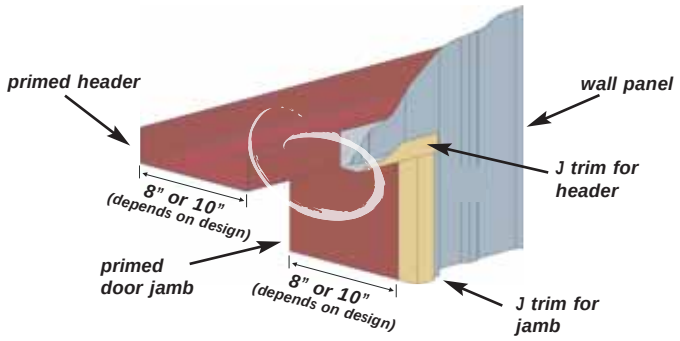

header or jamb cover NOT SUPPLIED

There is no foam closure inside the J trim at the top of the opening beside the header. This encourages leaks at the top of the header.

foam closure NOT SUPPLIED

Olympia's Base Trim Package

The heavy 16-gauge galvanized base angle is attached to the top outer edge of the foundation. The wall panels are cut 1" longer than the building height so they will extend 1" below the top of the foundation. This creates a straight finish seat for the bottom of the wall panels. This completely seals the bottom of the building against all leaks. The trim on the bottom matches the trim on the building creating a beautiful structure and also closes off the bottom of the corrugation of the wall panel. The base trim is included at no additional cost.

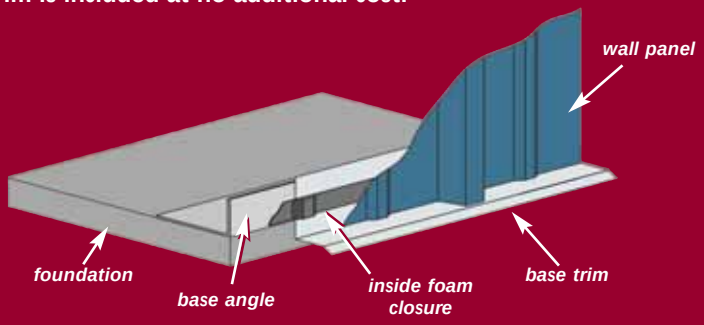

Competition's Base Trim

Other companies do not use a galvanized base angle, but only a base angle painted with a red oxide primer, which will corrode and rust. The base angle in many cases is only 20-gauge which is approximately 32% lighter than 16-gauge and will bend and warp during construction. The base trim is offered as an option at an additional cost.

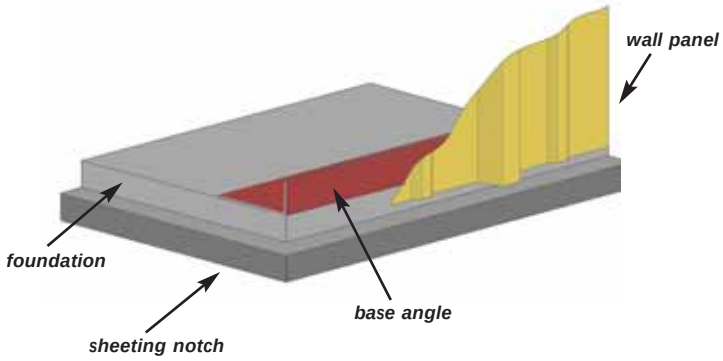

Olympia vs Pole Barns

Olympia's Steel Girts and Purlins

Olympia's steel girts and purlins have a zinc galvanized coating, applied at the mill, to protect against rust. Their girts will not rust, warp or bend and they are not subject to termites. Since Olympia buildings are made of steel, they are also not subject to fire hazards and can result in 35-40% insurance savings.

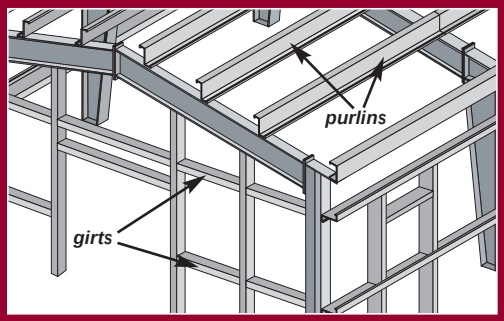

Pole Barns Wooden Girts and Purlins

Pole barns have wooden girts and purlins, which will bow and warp. This causes the screws in the sheeting to loosen and the holes to widen creating leaks. Since the girts and purlins are made of wood, they are subject to fire hazards and termite infestation resulting in 35-40% higher insurance costs.

Olympia's Rigid Frame Design

The web of the rafter beams and columns is a solid steel plate design and the flanges on the sides of the web are made of solid steel bar stock. The frames are manufactured in an "H" configuration using automated continuous welding equipment. Olympia uses a minimum of 1/4" flange thickness. This stops the beam from bowing or the flange from becoming wavy. An attractive gray oxide primer is applied to the frames.

Olympia's construction is not subject to fire hazards or termite infestation. Due to the fact that Olympia buildings do not have a cord tying the rafters together as in a pole barn design, birds are unable to roost in the building. Not only does the rigid frame design eliminate the opportunity for birds to defecate and damage machinery stored in the building, but it also minimizes the prospect of the spread of avian influenza to other animals within the structure through those droppings.

Olympia's building design also eliminates the need for a high pitched roof to shed snow and affords you 100% usable space. Lower pitched roofs equate to higher energy efficiency as there is less area to heat.

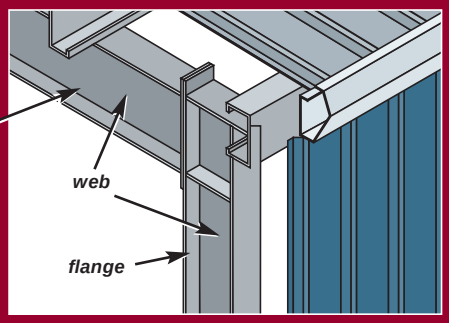

Pole Barns Truss Design

Since a pole barn's trusses and rafters are made of wood they are subject to fire hazards generating higher insurance rates, which can be 35-40% higher than that of a building with a rigid frame design. The wooden construction of a pole barn is also subject to termite infestation.

The rafters in pole barns have a cord at the bottom which goes from one end of the frame to the other end. This allows birds to perch and defecate on machinery causing deterioration of the equipment. Due to the bird droppings, there is tremendous opportunity for avian influenza to spread to other animals housed in riding arenas, poultry barns, cattle shelters or pig barns constructed in the pole barn design.

In addition, this cord also prevents utilization of the area above it, resulting in loss of 20 – 25% of functional space in the building. The dead space also contributes up to a 20-25% increase in heating expense. The end result is low energy efficiency and loss of usable space.

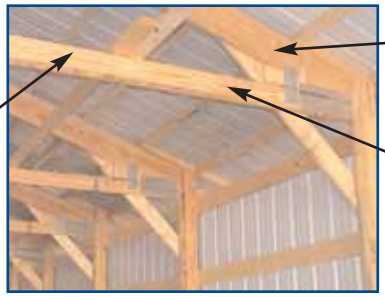

Olympia's Painted Sidewall Panels

The paint on Olympia's sidewall panels has a 40-year warranty against chipping, cracking, peeling or blistering. It is a siliconized polyester coating.

A substrate galvanized coating beneath the paint provides further protection against rusting.

The painted sidewall panels are wind rated to meet Florida code. The Florida approval number is FL-3985-R2.

Pole Barn Painted Sidewall Panels

Some companies only offer a 10-year paint warranty on the sidewall panels. Few offer a 20-year warranty on the paint.

Some companies' sidewall panels are not wind rated and do not have a Florida approval number.

Olympia's PBR Roof System (Purlin Bearing Rib)

Olympia's PBR roof system provides a full overlap preventing water from leaking into the building during storms when strong winds force rain against the overlap. Where the sheeting overlaps, the panel runs all the way to the bottom of the corrugation and along the bottom like a reversed "L." The top PBR panel resembles a "Z" and overlaps the bottom panel providing additional strength as well as protection against leakage.

Pole Barn "R" Panel Roof System

Some of Olympia's competitors use an "R" panel roof system. The overlap only extends 1/3 of the way into the corrugation of the connecting sheet and is not sufficient to give strength to the joint.

Water can build up in the corrugation where the panels overlap. Strong winds can push this built up water through the overlaps and into the building causing tremendous leaks.

Olympia's Roof Panels

Olympia's roof panels are made of 26-gauge steel with a yield of 80,000 PSI and a huge corrugation depth of $1^1/_4$". The strength of the steel together with the high PSI yield and deep corrugation create tremendous protection against strong winds and heavy snow loads.

The roof panels are wind rated to meet Florida code. The Florida approval number is FL-3722-R1.

Pole Barn Roof Panels

The thickness of the steel panels on the sidewalls and roof of some competitors' buildings is 29-gauge steel. These buildings are not as strong and are less durable since the steel is 32% lighter than the 26-gauge steel utilized by Olympia. The competition's corrugation is $^5/_8$" in depth, half the depth of Olympia's $1^1/_4$" corrugation. Therefore, the Olympia steel panel has twice the strength.

Some companies are not wind rated and do not have a Florida approval number.

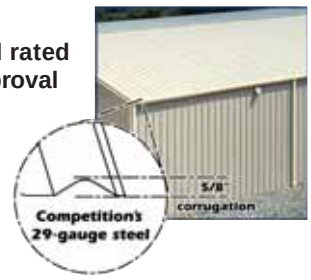

Olympia's Roof Mastic (sealant)

Olympia uses a mastic tape as a sealant on its panels. The overlaps have a 1" wide flat mastic strip and the end panels have a 1" wide double bead sealant strip that create a watertight seal.

During drilling, the large 1" width enables the roof fasteners not to miss the mastic. Fasteners can easily perforate the sealant creating the necessary seal.

Pole Barn Roof Mastic

The mastic used on the competition's roof panels is only 3/8" or 1/2" in width and cannot ensure a watertight seal. Strong winds can force rain against the panels and through the overlap into the building.

Fasteners have a greater risk of missing the narrower mastic thus failing to create the necessary watertight seal with the screw.

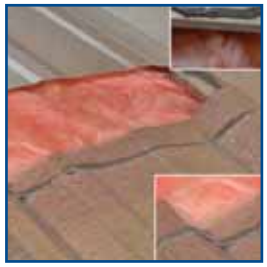

Olympia's Fasteners

All of the roof and sidewall panels utilize screws that come assembled with neoprene washers. The washers eliminate the potential for rust by preventing damage to the sheeting, such as cracking paint, due to over-tightened screws. These washers also prevent the screws from widening the holes causing leaks.

The stainless steel screws are 18 parts chrome and 8 parts nickel and have painted heads that match the color of the sheeting. They will not rust, tarnish, turn dark gray or black.

Pole Barn Fasteners

The screws for the sidewall panels do not come with washers to prevent over-tightening. Over-tightening causes holes to widen and paint to crack and chip creating a source for leaks and corrosion.

A long-life alloy screw may be provided and can prevent rust, but will oxidize and turn dark gray or black making the building unattractive.

Olympia's Roof Coating (AZ55 Galvalume®)

Olympia's roof coating is AZ55 Galvalume®. The coating requires no maintenance or painting and it retains its original luster. It is comprised of 55% aluminum, 44% zinc and 1% silicone. The greater aluminum content creates a higher resistance to rust.

There is a 25-year perforation warranty backed by the steel mills. If a hole rusts through a panel, the steel mill will replace the panel.

Pole Barn Roof Coating

Some companies use an AZ50 coating on their roof panels with only 50% aluminum content. They offer a 20-year perforation warranty if a hole rusts through the panel, five years less than the warranty offered by Olympia.

Some other companies use a zinc-galvanized coating, which contains no aluminum. Roof panels with this coating will rust and corrode causing holes to form and leaks to develop.

Olympia vs Web Truss

Olympia's Painted Sidewall Panels

The paint on Olympia's sidewall panels has a 40-year warranty against chipping, cracking, peeling or blistering. It is a siliconized polyester coating.

The substrate galvanized coating beneath the paint provides further protection against rusting.

The painted sidewall panels are wind rated to meet Florida code. The Florida number is FL-3985-R2

Web Truss Paint

Some companies offer only a 10-year paint warranty on the sidewall panels. Few offer a 20-year warranty on the paint.

Some companies' sidewall panels are not wind rated and do not have a Florida approval number.

Olympia's PBR Roof System (Purlin Bearing Rib)

Olympia's PBR roof system provides a full overlap, preventing water from leaking into the building during storms when strong winds force rain against the overlap. Where the sheeting overlaps, the panel runs all the way to the bottom of the corrugation and along the bottom like a reversed "L." The top PBR panel resembles a "Z" and overlaps the bottom panel providing additional strength as well as protection against leakage.

Web Truss "R" Panel Roof System

Some of Olympia's competitors use an "R" panel roof system. The overlap only extends 1/3 of the way into the corrugation of the connecting sheet and is not sufficient to give strength to the joint.

Water can build up in the corrugation where the panels overlap. Strong winds can push this built up water through the overlaps and into the building causing tremendous leaks.

Olympia's Roof Panels

Olympia's roof panels are made of 26-gauge steel with a yield of 80,000 PSI and a huge corrugation depth of $1^1/_4$". The strength of the steel together with the high PSI yield and deep corrugation create tremendous protection against strong winds and heavy snow loads.

The roof panels are wind rated to meet Florida code. The Florida approval number is FL-3722-R1.

Web Truss Roof Panels

The thickness of the steel panels on the sidewalls and roof of some competitors' buildings is 29-gauge steel. These buildings are not as strong and are less durable since the steel is 32% lighter than the 26-gauge steel utilized by Olympia. The competition's corrugation is $^5/_8$" in depth, half the depth of Olympia's $1^1/_4$" corrugation. Therefore, the Olympia steel panel has twice the strength.

Some companies are not wind rated and do not have a Florida approval number.

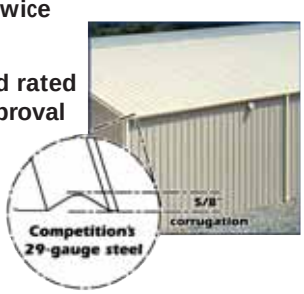

Olympia's Roof Mastic (sealant)

Olympia uses a mastic tape as sealant on its panels. The overlaps have a 1" wide flat mastic strip and the end panels have a 1" wide double bead sealant strip that create a watertight seal.

During drilling, the large 1" width enables the roof fasteners not to miss the mastic. Fasteners can easily perforate the sealant creating the necessary seal.

Web Truss Roof Mastic

The mastic used on the competition's roof panels is only $^3/_8$" or $^1/_2$" in width and cannot ensure a watertight seal. Strong winds can force rain against the panels and through the overlap into the building.

Fasteners have a greater risk of missing the narrower mastic thus failing to create the necessary watertight seal with the screw.

Olympia's Fasteners

All of the roof and sidewall panels utilize screws that come assembled with neoprene washers. The washers eliminate the potential for rust by preventing damage to the sheeting, such as cracking paint, due to over-tightened screws. These washers also prevent the screws from widening the holes causing leaks.

The stainless steel screws are 18 parts chrome and 8 parts nickel and have painted heads that match the color of the sheeting. They will not rust, tarnish, turn dark gray or black.

Web Truss Fasteners

The screws for the sidewall panels do not come with washers to prevent over-tightening. Over-tightening causes holes to widen and paint to crack and chip creating a source for leaks and corrosion.

A long-life alloy screw may be provided and can prevent rust, but will oxidize and turn dark gray or black making the building unattractive.

Olympia's Roof Coating (AZ55 Galvalume®)

Olympia's roof coating is AZ55 Galvalume. The coating requires no maintenance or painting and it retains its original luster. It is comprised of 55% aluminum, 44% zinc and 1% silicone. The greater aluminum content creates a higher resistance to rust.

There is a 25-year perforation warranty backed by the steel mills. If a hole rusts through a panel, the steel mill will replace the panel.

Web Truss Roof Coating

Some companies use an AZ50 coating on their roof panels with only 50% aluminum content. They offer a 20-year perforation warranty if a hole rusts through the panel, five years less than the warranty offered by Olympia.

Some other companies use a zinc-galvanized coating, which contains no aluminum. Roof panels with this coating will rust and corrode causing holes to form and leaks to develop.

Olympia's Steel Girts and Purlins

Olympia's steel girts and purlins have a zinc galvanized coating, which is applied at the mill to protect against rust. Their girts will not rust, warp or bend and they are not subject to termites. Since Olympia buildings are made of steel, they are not subject to fire hazards which can result in a 35-40% insurance savings.

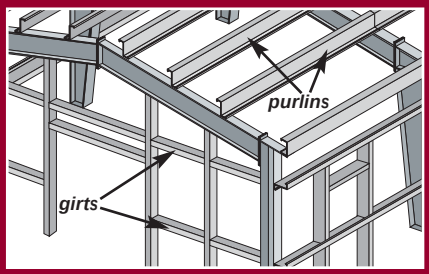

Web Truss Wooden Girts and Purlins

Web Truss designs have wooden girts and purlins, which will bow and warp. This causes the screws in the sheeting to loosen and the holes to widen creating leaks. Since the girts and purlins are made of wood, they are subject to fire hazards and termite infestation resulting in 35-40% higher insurance costs.

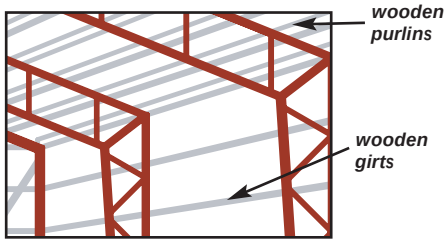

Olympia's Rigid Frame Design

The web of the rafter beams and columns is a solid steel plate design and the flanges on the sides of the web are made of solid steel bar stock. The frames are manufactured in an "H" configuration using automated continuous welding equipment. Olympia uses a minimum of 1/4" flange thickness. This stops the beam from bowing or the flange from becoming wavy. An attractive gray oxide primer is applied to the frames.

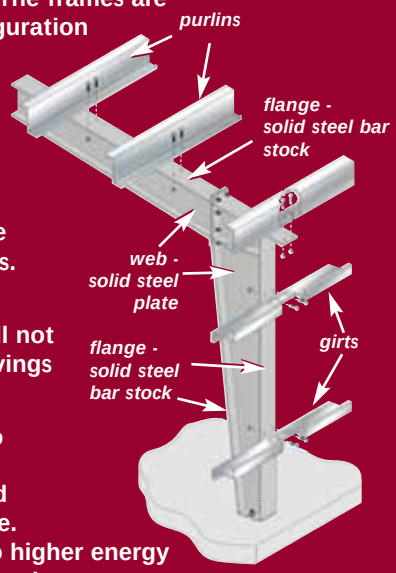

Olympia's construction is not subject to fire hazards and will not burn resulting in a 35-40% savings on insurance costs.

Olympia's building design also eliminates the need for a high pitched roof to shed snow and affords you 100% usable space. Lower pitched roofs equate to higher energy efficiency as there is less area to heat.

Due to the fact that Olympia buildings do not have an open web design, birds are unable to roost in the building. Not only does the rigid frame design eliminate the opportunity for birds to defecate and damage machinery stored in the building, but it also minimizes the prospect of the spread of avian influenza to other animals within the structure through those droppings.

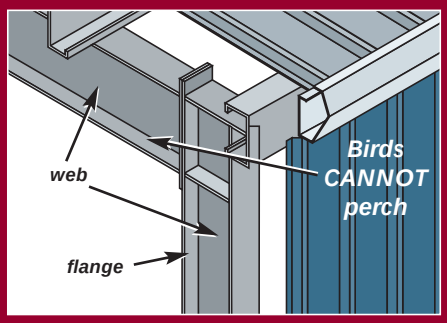

Open Web Truss Frame Design

A web frame design does not have a solid plate web. It is made of angle iron in a lattice or web form. Should a fire occur, it will not withstand high temperatures and will collapse. The web design uses a 4/12 pitch, since it is not strong enough to carry snow loads. The higher pitch enables the building to shed the snow, at the same time creating space that cannot be utilized. For example: an 80' wide building with a 4/12 pitch, 20' to the eave is 33'4" in the center. While a rigid frame design with a 1/12 pitch and an eave length of 20' is 23'4" in the center. The higher pitch creates dead space that is of no value, in fact it generates energy costs that are 20-25% higher than a building with a lower pitch.

The open web framework encourages birds to perch and defecate on machinery causing deterioration of the equipment. Due to the bird droppings, there is tremendous opportunity for avian influenza to spread to other animals housed in riding arenas, poultry barns, cattle shelters or pig barns constructed in the open web truss design.

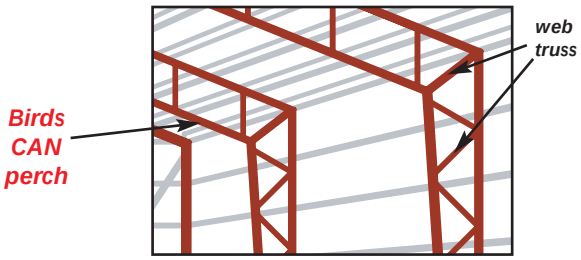

Olympia's High Energy Savings Insulation System

The Olympia High Energy Savings Insulation System uses 12" of insulation on the roof, R38, and 9" of insulation, R30, on the sides. Ten inches of insulation is placed between the 10" high purlin and an additional 2" of insulation is placed on top of the purlins. The total of 12" of insulation gives the R38 value. This system increases energy efficiency by over 60% and includes a vapor barrier, which is installed under the purlins and over the girts. The barrier is held in place by strapping and provides an attractive finish giving the appearance of a false ceiling on the roof and finished walls on the sides. The vapor barrier prevents condensation and sagging since the insulation is sandwiched securely between the vapor barrier and the sheeting.

EASY INSTALLATION

1. Install the vapor barrier under the purlins on the roof and over the girts inside the building.
2. Place the insulation between the purlins on the roof and between the girts on the sides of the building.
3. Screw the wall sheeting into the girts and the roof sheeting into the purlins.

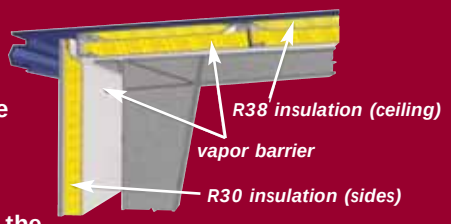

Web Truss Insulation System

The web truss insulation system uses 6" or 8" of insulation, which is placed between the wooden purlins on the roof and the wooden girts on the sides. The purlins can be 2x8's or 2x6's and the girts 2x6's or 2x4's. To hold the insulation in place, the insulation is stapled to each side of the purlin and each side of the girt. The gap between the staples allows moisture to get into the insulation causing sagging as the insulation is filled with water. This ruins the insulation. Eventually the weight of the water in the insulation causes the staples to loosen and the insulation falls down.

The alternative method of holding the insulation in place on the roof and the sides is to line the inside of the roof and the walls with plywood or sheetrock, which is extremely expensive. The Web Truss insulation system is limited to a maximum of 8" of insulation on the roof since the wooden purlins are 2x8's. Therefore, the 8" insulation provides a maximum R22 rating whereas the Olympia Energy System offers a more efficient R38 rating. The R38 yields approximately 60% higher energy efficiency.

Olympia Basic Insulation System (Standard Vinyl Backed)

The Olympia Basic Insulation System (standard vinyl backed) uses 6" of insulation on the roof and sides, R19. Three or 4" of insulation can be used on the roof and on the sides, but this equates to a lower R value rating. A vapor barrier is bonded to the fiberglass.

When installing the insulation on the roof, you place the insulation with the vapor barrier on the purlins. The vapor barrier faces the inside of the building prohibiting any moisture, from the roof, penetrating the insulation. When installing the insulation on the sides, the vapor barrier is placed on the girts facing the inside of the building preventing moisture from penetrating the insulation and ruining it. Again, the vapor barrier prevents the ruinous effects of moisture. The vapor barrier also provides an attractive interior finish.

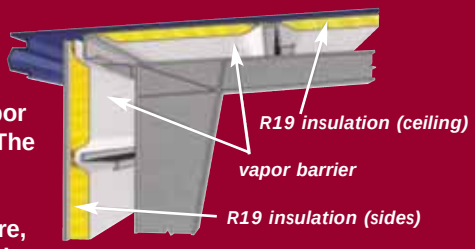

Web Truss Insulation System

The web truss insulation system uses 6" or 8" of insulation, which is placed between the wooden purlins on the roof and the wooden girts on the sides. These purlins are 2x8's or 2x6's. To hold the insulation in place, it must be stapled to the wooden purlins and girts on each side. If this method is used, the gap between the staples allows the moisture to get into the insulation filling it with water. This will cause the insulation to sag, the staples will begin to loosen and the insulation will fall down. The alternative method of holding the insulation in place is to line the inside of the roof and the walls with either plywood or sheetrock, which is extremely expensive.

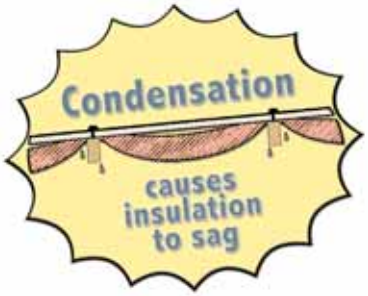

The Olympia Experience

- Superior Customer Service
- Precision Design
- Quality Materials
- Skilled Workmanship
- Prompt Scheduling
- Efficient Delivery
- Continued Support

OLYMPIA
STEEL BUILDINGS®

Universal Steel Buildings

400 Island Avenue · McKees Rocks, PA 15136

www.olympiabuildings.com

1-888-449-7756

©2008 King David Interactive Corp. All Rights Reserved.

OLYMPIA STEEL BUILDINGS®

GSA Contract Holder
Contract GS-07F-0312V

1-888-449-7756

AIRCRAFT HANGARS

OLYMPIA STEEL BUILDINGS®

GSA Contract Holder
Contract GS-07F-0312V

1-888-449-7756

AIRCRAFT HANGARS

OLYMPIA STEEL BUILDINGS®

GSA Contract Holder
Contract GS-07F-0312V

1-888-449-7756

CHURCHES

OLYMPIA STEEL BUILDINGS®

GSA Contract Holder
Contract GS-07F-0312V

1-888-449-7756

CHURCHES

OLYMPIA STEEL BUILDINGS

GSA Contract Holder
Contract GS-07F-0312V

1-888-449-7756

COMMERCIAL BUILDINGS

OLYMPIA STEEL BUILDINGS®

GSA Contract Holder
Contract GS-07F-0312V

1-888-449-7756

COMMERCIAL BUILDINGS

OLYMPIA STEEL BUILDINGS®

GSA Contract Holder
Contract GS-07F-0312V

1-888-449-7756

COMMERCIAL BUILDINGS

OLYMPIA STEEL BUILDINGS®

GSA Contract Holder
Contract GS-07F-0312V

1-888-449-7756

COMMERCIAL BUILDINGS

OLYMPIA STEEL BUILDINGS®

GSA Contract Holder
Contract GS-07F-0312V

1-888-449-7756

EQUIPMENT & VEHICLE GARAGES

OLYMPIA STEEL BUILDINGS®

GSA Contract Holder
Contract GS-07F-0312V

1-888-449-7756

EQUIPMENT & VEHICLE GARAGES

OLYMPIA STEEL BUILDINGS®

GSA Contract Holder
Contract GS-07F-0312V

1-888-449-7756

FIRE STATIONS

OLYMPIA STEEL BUILDINGS®

GSA Contract Holder
Contract GS-07F-0312V

1-888-449-7756

FIRE STATIONS

OLYMPIA STEEL BUILDINGS®

GSA Contract Holder
Contract GS-07F-0312V

1-888-449-7756

INDUSTRIAL / MANUFACTURING

OLYMPIA STEEL BUILDINGS®

GSA Contract Holder
Contract GS-07F-0312V

1-888-449-7756

INDUSTRIAL / MANUFACTURING

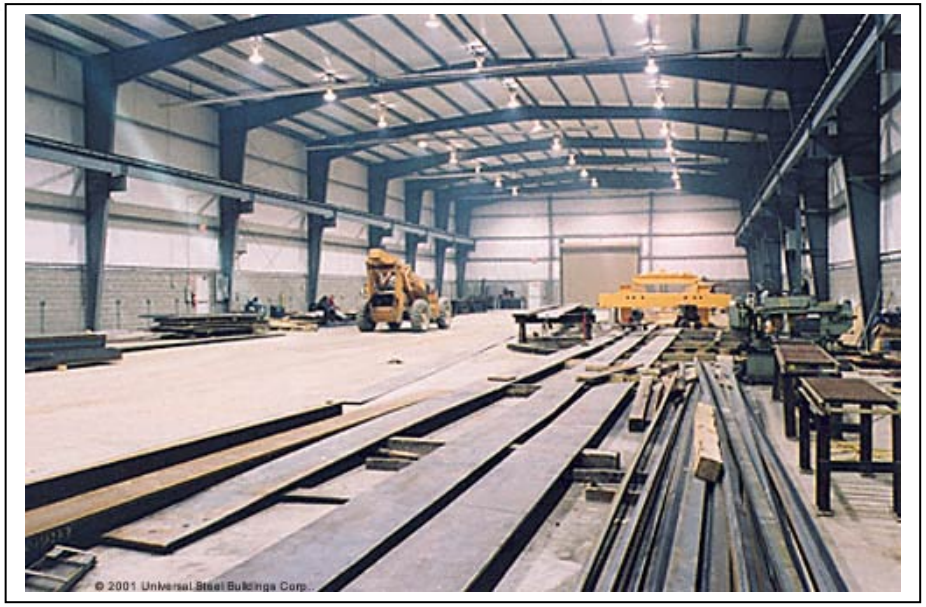

OLYMPIA STEEL BUILDINGS®

GSA Contract Holder
Contract GS-07F-0312V

1-888-449-7756

INDUSTRIAL / MANUFACTURING

OLYMPIA STEEL BUILDINGS®

GSA Contract Holder
Contract GS-07F-0312V

1-888-449-7756

INDUSTRIAL / MANUFACTURING

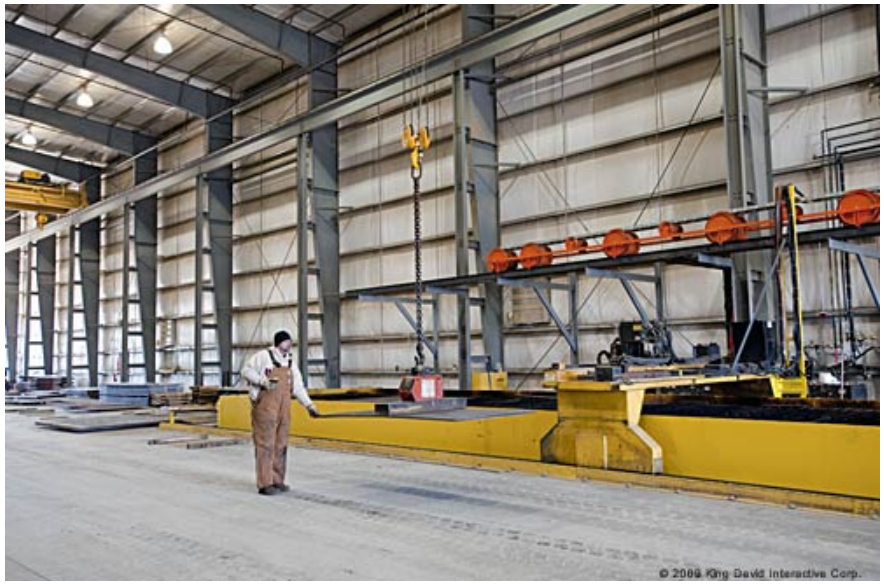

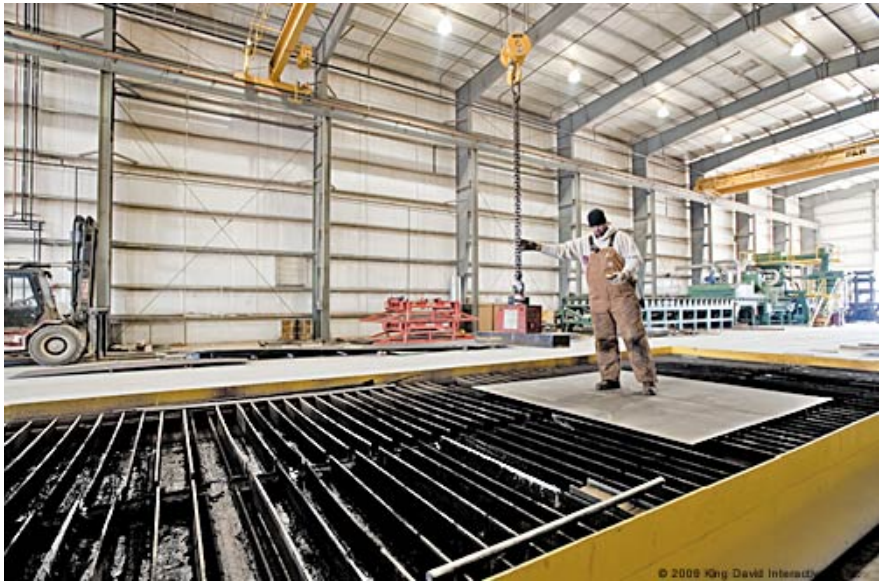

OLYMPIA STEEL BUILDINGS®

GSA Contract Holder
Contract GS-07F-0312V

1-888-449-7756

MINI STORAGE BUILDINGS

OLYMPIA STEEL BUILDINGS®

GSA Contract Holder
Contract GS-07F-0312V

1-888-449-7756

MINI STORAGE BUILDINGS

OLYMPIA STEEL BUILDINGS®

GSA Contract Holder
Contract GS-07F-0312V

1-888-449-7756

MINI STORAGE BUILDINGS

OLYMPIA STEEL BUILDINGS®

GSA Contract Holder
Contract GS-07F-0312V

1-888-449-7756

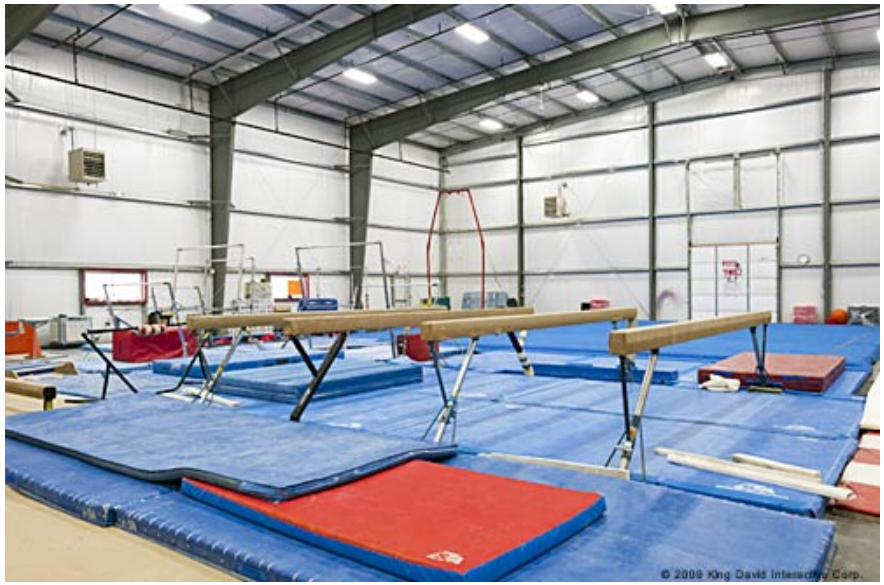

OLYMPIA STEEL BUILDINGS®

GSA Contract Holder
Contract GS-07F-0312V

1-888-449-7756

OLYMPIA STEEL BUILDINGS®

GSA Contract Holder
Contract GS-07F-0312V

1-888-449-7756

OLYMPIA STEEL BUILDINGS®

GSA Contract Holder
Contract GS-07F-0312V

1-888-449-7756

SMALL SHOPS & STORAGE BUILDINGS

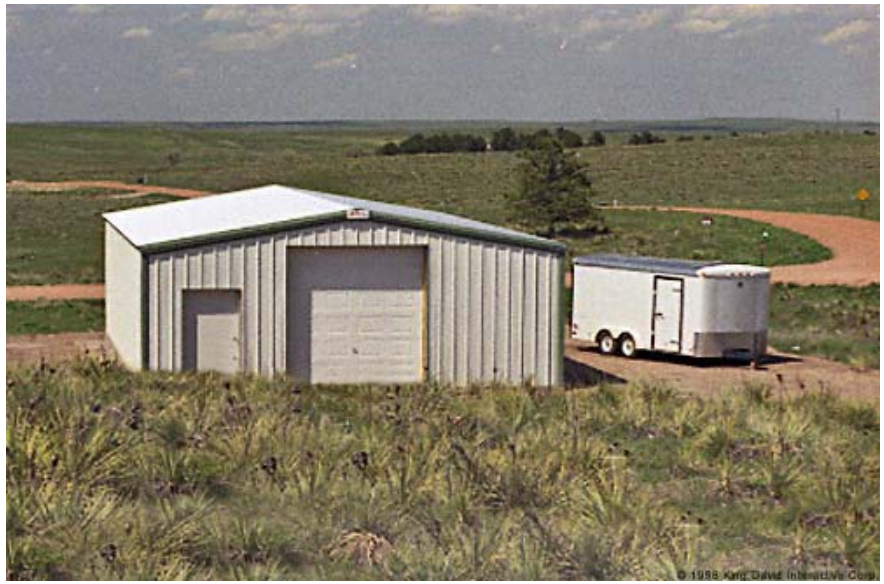

OLYMPIA STEEL BUILDINGS®

GSA Contract Holder
Contract GS-07F-0312V

1-888-449-7756

SMALL SHOPS & STORAGE BUILDINGS

OLYMPIA STEEL BUILDINGS®

GSA Contract Holder
Contract GS-07F-0312V

1-888-449-7756

SMALL SHOPS & STORAGE BUILDINGS

OLYMPIA STEEL BUILDINGS®

GSA Contract Holder
Contract GS-07F-0312V

1-888-449-7756

STORAGE WAREHOUSES

OLYMPIA STEEL BUILDINGS®

GSA Contract Holder
Contract GS-07F-0312V

1-888-449-7756

STORAGE WAREHOUSES

OLYMPIA STEEL BUILDINGS®

GSA Contract Holder
Contract GS-07F-0312V

1-888-449-7756

STORAGE WAREHOUSES

OLYMPIA STEEL BUILDINGS®

GSA Contract Holder
Contract GS-07F-0312V

1-888-449-7756

STORAGE WAREHOUSES

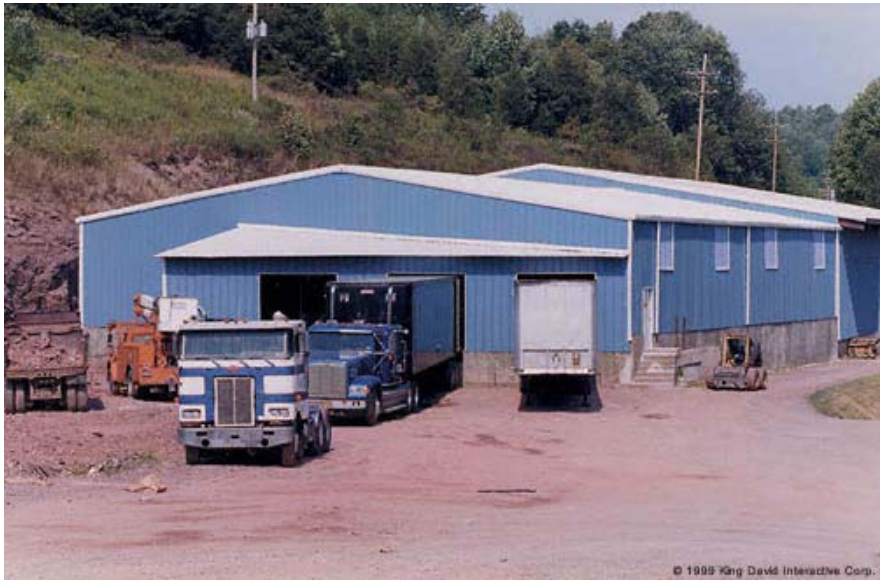

OLYMPIA STEEL BUILDINGS®

GSA Contract Holder
Contract GS-07F-0312V

1-888-449-7756

STORAGE WAREHOUSES

OLYMPIA STEEL BUILDINGS®

GSA Contract Holder
Contract GS-07F-0312V

1-888-449-7756

EQUIPMENT & VEHICLE GARAGES

OLYMPIA STEEL BUILDINGS®

GSA Contract Holder
Contract GS-07F-0312V

1-888-449-7756

EQUIPMENT & VEHICLE GARAGES

Superior coatings coupled with reliable product engineering provide excellence in building system construction solutions.

Ceram-A-Star®1050 Panel Colors

The next generation silicone-polyester Cool Chemistry® coating system is here! Engineered by Akzo Nobel Coatings Inc.* to provide a 40-year film integrity warranty against peeling, flaking or loss of adhesion, these coatings also offer high solar reflectivity in medium and dark colors. The CERAM-A-STAR1050 coatings dramatically reduce energy consumption and associated costs especially in hot, sunny climates.

CERAM-A-STAR1050 outperforms similar coatings based on real-world exposure testing in South Florida. Its use of proprietary resin technology and ceramic pigments provide exceptional exterior durability as well as energy savings. It is available in a full spectrum of colors with a 30-year performance warranty covering chalking and fading. Coatings accommodate "cool" technology and "green building" compliance.

* Akzo Nobel Coatings Inc. produces coatings recognized as the highest quality in the industry. Adhering to tight quality control procedures, they meet and exceed specifications and standards set forth by the American Society for Testing and Material (ASTM) and ISO 9001 certification.

PBR PANEL

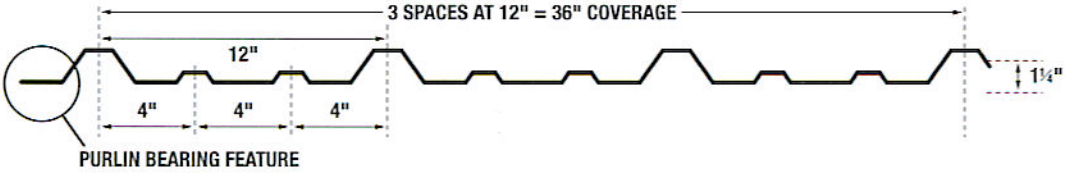

REVERSE PANEL

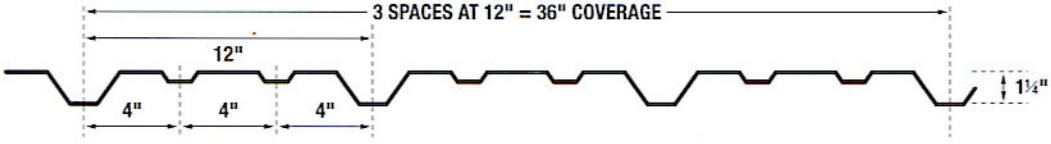

26 Gauge Stock Colors with Trim Available in all Colors

Standing seam available in two colors – White and Galvalume®

Actual color may vary slightly from color samples shown. If color choice is critical, request a color sample. Because of changing trends in color popularity, the colors illustrated are subject to change without notice.

POLAR WHITE TSR 0.64

PEARL GRAY TSR 0.37

SLATE GRAY TSR 0.25

BURNISHED SLATE TSR 0.32

BRITE RED TSR 0.34

RUSTIC RED TSR 0.27

SAHARA TAN TSR 0.51

LIGHTSTONE TSR 0.60

COLONY GREEN TSR 0.35

FERN GREEN TSR 0.30

HAWAIIAN BLUE TSR 0.33

GALLERY BLUE TSR 0.25

© 2007 Interactive Enterprises Corporation

Film Properties	Test Methods & Descriptions	CERAM-A-STAR®1050	
SUBSTRATE		Hot Dipped Galvanized Galfan & Galvalume®	Aluminum
Dry Film Thickness:	ASTM[1] D1400, D1005, D4138 (NCCA[2] II-13,14,15)	0.20 - 0.25 Mils Primer 0.70 - 0.90 Mils Topcoat	0.20 - 0.25 Mils Primer 0.70 - 0.90 Mils Topcoat
PHYSICAL PROPERTIES			
60° Specular Gloss:	ASTM D523	35%	35%
Pencil Hardness:	ASTM D3363 (NCCA II - 12) Eagle Turquoise Pencil	"F" - Minimum	"F" - Minimum
Flexibility: T-Bend	NCCA II - 9	2T - No Tape-Off	2T - No Tape-Off
Mandrel Bend	ASTM D522 180° bend around 1/8" mandrel	No Tape Off	No Tape Off
Adhesion:	ASTM D3359 (NCCA II - 5) Reverse Impact Cross Hatch	No Adhesion Loss	No Adhesion Loss
Reverse Impact:	ASTM D2794 (NCCA II - 6) 80 inch-pound impact with a 5/8" steel ball or, = 2000 x decimal steel thickness in inches	No Adhesion Loss	No Adhesion Loss
ABUSE TOLERANCE			
Abrasion Resistance: Falling Sand Transit	ASTM D968, Liters to expose 5/32" area of substrate Based on topside to backer contact in transit after painting	30 Liters Per Mil of Film Acceptable	30 Liters Per Mil of Film Acceptable
Mortar Resistance:	AAMA[8] 605.2 (24 Hour Pat Test)	No Effect	No Effect
Detergent Resistance:	ASTM D2248 3%@ 100°F, 72 Hours	No Effect	No Effect
RESISTANCE TO CORROSION, CHEMICALS & POLLUTION			
Acid Pollutants:	Per ASTM D1308, Proc.6.2 :		
10% Muriatic Acid	24 Hours	No Effect	No Effect
20% Sulfuric Acid	24 Hours	No Effect	No Effect
70% Nitric Acid Vapors	AAMA 605.2,ASTM G87 (30 Minutes)	< 5 dE Color Change[6]	< 5 dE Color Change[6]
Kesternich Test	SO_2 CyclicTest, 2 Liters	10 cycles[5]	10 cycles[5]
Alkali Resistance: Sodium Hydroxide	ASTM D1308 10%, 25% (1 Hour)	Minimal Effect	Minimal Effect
Salt Fog:	ASTM B117 5% Salt Fog @ 95 °F	1000 Hours[4]	3000 Hours[4]
Humidity:	ASTM D2247 100% Relative Humidity @ 100 °F	1500 Hours[7]	1500 Hours[7]
WEATHERING PROPERTIES			
Accelerated Weathering:	ASTM D822, G152, G153 Weatherometer	2000 Hours	2000 Hours
	ASTM D2244 Color	< 5 dE Color Change[6]	< 5 dE Color Change[6]
	ASTM D4214 Chalk	Maximum #8	Maximum #8
EMMAQUA Testing:	Per ASTM D4141	Superior Results	Superior Results
Exterior Weathering :		Superior: Maximum	Superior: Maximum
Florida Exposure	ASTM D2244 Color	< 5 dE Color Change[6]	< 5 dE Color Change[6]
10 Years @ 45° South	ASTM D659 Chalk	Maximum #8	Maximum #8
Film Erosion	AAMA 605.2	Less than 20% film loss	Less than 20% film loss

1 American Society Testing and Materials
2 National Coil Coaters Association
3 Higher and lower glosses available upon request.
4 Less than 1/8" creep from scribe. No more than few #8 blisters.
5 No objectionable color change.
6 Hunter d (delta) E color difference units.
7 No more than few #8 blisters.
8 American Architectural Manufacturers Association

• CERAM-A-STAR® 1050 is a trademark of Akzo Nobel Coatings, Inc.

AKZO NOBEL
For more information contact: Akzo Nobel Coatings Inc. • 1313 Windsor Avenue
Columbus, OH 43216-0147 • (614)294-3361 • FAX (614)294-0436
www.akzonobel-ccna.com

STANDING SEAM PANEL COOL COLORS SELECTION

35-YEAR LIMITED WARRANTY TRINAR® (KYNAR 500®/HYLAR 5000®) COLORS

SR & SRI Ratings · Low Gloss Colors

Snow White
SR .67 SRI 81

Battleship Gray
SR .37 SRI 40

Sagebrush
SR .55 SRI 64

Hunter Green
SR .27 SRI 25

Flint Gray
SR .39 SRI 43

Autumn Red
SR .31 SRI 42

Wedgewood Blue
SR .31 SRI 32

Medium Bronze
SR .28 SRI 28

Cardinal Red
SR .40 SRI 44

SOLAR REFLECTIVITY (SR)

Solar reflectivity or reflectance is the ability of a material to reflect solar energy from its surface back into the atmosphere. The SR value is a number from 0 to 1.0. A value of 0 indicates that the material absorbs all solar energy and a value of 1.0 indicates total reflectance. Energy Star requires an SR value of 0.25 or higher for steep slope (above 2:12) roofing and an SR value of 0.65 or higher for low slope (2:12 or less) roofing. For more information, please go to www.energystar.gov.

SOLAR REFLECTANCE (SRI)

The SRI is used to determine compliance with LEED requirements and is calculated according to ASTM E 1980 using values for reflectance and emissivity. Emissivity is a material's ability to release absorbed energy. To meet LEED requirements, a roofing material must have an SRI of 29 or higher for steep slope (above 2:12) roofing and an SRI of 78 or higher for low slope (2:12 or less) roofing. For more information, please go to www.usgbc.org.

OLYMPIA STEEL BUILDINGS®

Olympia Steel Buildings®
400 Island Avenue • McKees Rocks, PA 15136
888-449-7756

ZEUS-SHIELD™

"The Seam Makes the Roof"

©2009 Interactive Enterprises Corpora

Cool Metal Roofing - Energy Efficient and Sustainable

The roof can have the greatest impact on the energy use of a building. Cool Metal Roofing is a family of sustainable, energy efficient roofing products comprised of unpainted and pre-painted metal finishes. It is available in a wide variety of finishes, colors, textures and profiles for steep-slope and low-slope roofing applications.

Generally, metal roofing's relative "coolness" is determined by its reflectivity and emissivity. As the diagram demonstrates, when solar radiation strikes a roof surface, some of that radiation - up to 70% - is reflected to the sky. Therefore, a roof surface with high reflectivity, as well as high emittance value, remains cooler and less heat is transferred into the building or convected into ambient air.

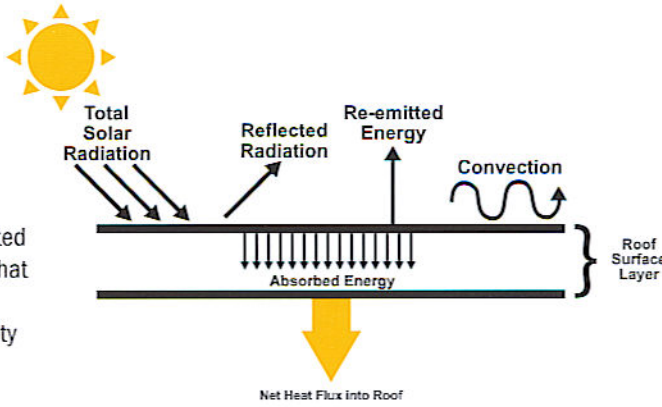

Mill-finish metal roof systems have very high solar reflectance but limited emittance. Metal roofs with oven-cured, pre-painted organic coatings that incorporate new "cool pigment" technology offer high total solar reflectance and high infrared emittance even with dark colors. Emissivity as high as 90% can be achieved for painted metal roofs.

Energy Savings up to 40%

The Cool roofs help reduce energy consumption by lowering cooling loads. Reflective roofs directly save up to 40% in heating and cooling energy costs, as reported by Lawrence Berkeley National Laboratory.

ZEUS-SHIELD™ roof panels are available with TRINAR® COOL CHEMISTRY® Series coatings which contain ceramic infrared reflective pigments. These special pigments are designed to reflect infrared energy while still absorbing visible light energy, thus appearing as the same color yet staying much cooler. Painted metal roofs retain 95% of their initial reflectance and emittance over time.

End Result

The end result is sustainable building material that can reduce peak energy demand and help to mitigate urban heat island effects.

AkzoNobel TRINAR® (KYNAR 500®/HYLAR 5000®) Limited Warranty

AkzoNobel's TRINAR (KYNAR 500/HYLAR 5000) is warranted, subject to limitations in the limited warranty, to conform to the following performance standards:

1. For 35 years, TRINAR (KYNAR 500/HYLAR 5000) will not peel, flake or otherwise lose adhesion to an extent that is apparent on ordinary outdoor visual observation.
2. For 35 years, roof panels of TRINAR (KYNAR 500/HYLAR 5000) will not chalk more than a number eight (8) rating when measured per ASTM D 4214, Method A.
3. For 35 years, roof panels of TRINAR (KYNAR 500/HYLAR 5000) will not change color more than five (5) ΔE (delta E) Hunter units when measured per ASTM D 2244 on clean surfaces after removing dirt, other surface deposits and chalk per ASTM 3964.

ZEUS-SHIELD FILM PROPERTIES/SPECIFICATIONS

SUBSTRATES – Hot-dipped galvanized steel (Galvalume®)
COMPOSITION and MATERIALS - 70% KYNAR 500 or HYLAR 5000 PVDF fluoropolymer resin

Technical Data/Physical Properties

PROPERTY	VALUE	ASTM TEST
Gloss @ 60˚	8-10	D523P
Pencil Hardness	HB-Min.	D3363-05
Post-Formability, 180˚ bend around .125˚ mandrel	(1) Acceptable	D5ests22-93a
Adhesion	(2) Acceptable	D3359-02
Abrasion Resistance, Falling Sand	60 +/- 5 liters/mil	D968-93
ACCELERATED TESTS:	**VALUE**	**ASTM TEST**
Weatherometer: 1,000 hour exposure	(3) Acceptable	D3361
Humidity: 2,000 hour exposure	(4) Acceptable	D2247-92
Salt Spray: 1,000 hours in 5% salt fog @ 95˚	(5) Acceptable	D714-02
Cyclic Salt Fog/UV exposure:	(6) Acceptable	D5894
Chemical Spot Test:	(7) Acceptable	D1308

©2009 Interactive Enterprises Corporation

GSA Contract Holder
Contract GS-07F-0312V

1-888-449-7756

SPECIAL ATTRIBUTES / ENVIRONMENTAL ATTRIBUTES:

- FEMP Energy Efficiency Item – Meets Federal Energy MGMT Program energy efficient levels as required by EO 13123 and 13221
- Comprehensive Procurement Guidelines (CPG) compliant – meets/exceeds EPA Recovered Material Advisory Notice (RMAN) standard
- Recycled Content – 70-72%
- Low Volatile Organic Compounds (VOC – paints)
- Lead-Free Item According to ASTM/EPA test methods
- Chlorine Free
- Ozone Safe
- CFC-Free
- ODS-Free
- Chromate-Free Item According to ASTM/EPA test methods
- Mercury-Free Item According to ASTM/EPA test methods
- Benzene-Free Item According to ASTM/EPA test methods
- NESHAP Compliant Item as established by National Emission Standard for Hazardous Air Pollutant (NESHAP) regulation
- GreenSeal Item – Certified to meet or exceed voluntary standards for environmental preferable as established by GreenSeal

LEED®, "Leadership in Energy and Environmental Design" is a program that promotes Green Building values of sustainability, energy efficiency, and environmental responsibility. Developed by the U.S. Green Building Council (USGBC), "LEED is an internationally recognized certification system that measures how well a building or community performs across all the metrics that matter most: energy savings, water efficiency, CO2 emissions reduction, improved indoor environmental quality, and stewardship of resources and sensitivity to their impacts." http://www.usgbc.org

Five of six LEED categories are applicable to Olympia Steel pre-engineered buildings:

- Sustainable Site
- Energy and Atmosphere
- Materials and Resources
- Indoor Environmental Quality
- Innovation and Design Process

Building with Olympia Steel Buildings can earn your building points toward LEED® certification in the following areas:

- Sustainable Sites 7.2 – Heat Island Effect – Roof
- Materials and Resources 5.1 – Recycled Content
- Materials and Resources 5.2 – Recycled Content
- Exemplary Performance - Recycled Content 70-72%

Consult with your LEED-Accredited consultant about all the ways your building project may achieve LEED points.

OLYMPIA STEEL BUILDINGS

GSA Contract Holder
Contract GS-07F-0312V

1-888-449-7756

MILITARY, FEDERAL AND STATE GOVERNMENT CUSTOMERS

US ARMY
US MARINE CORPS LOGISTICS COMMAND
US COAST GUARD, STATEN ISLAND, NY
ARMY CORP. OF ENGINEERS
F7U3MB-MD AIR NATIONAL GUARD
COLD REGIONS TEST CENTER, FT. GREELEY , AK
MCGREGOR TRAINING COMPLEX, FT. BLISS, TX
BUREAU OF RECLAMATION, GREEN RIVER, WY

US NAVY
US COAST GUARD, SEWICKLEY, PA
MARYLAND AIR NATIONAL GUARD
DEPT OF NATIONAL DEFENSE #1
FDA
NATIONAL WEATHER SERVICE
USDA NATURAL RESOURCES CONVENTION CENTER, MD
NASA

ADAMS TOWNSHIP
BANNER COUNTY SCHOOLS
BELLE VERNON SCHOOL DISTRICT ,PA
BIG SEWICKLEY CREEK VFD
BOROUGH OF CALIFORNIA
BOROUGH OF DALTON
BOROUGH OF MAGNOLIA
CENTRAL FALLS FIRE DEPT.
CITY OF AMSTERDAM
CITY OF BRENTWOOD, MISSOURI
CITY OF DEERFIELD FIRE DEPT
CITY OF GARY
CITY OF HORNELL
CITY OF LONG BRANCH
CITY OF LYKENS BORO.
CITY OF MESQUITE, NEVADA
CITY OF OMAHA PLANNING DEPT
CITY OF YUCAIPA
COACHELLA VALLEY WATER DIST
COOK COUNTY SHERIFF'S DEPT.
COUSINO HIGH SCHOOL
DELAWARE CITY MARINA
DENISON MUNICIPAL AIRPORT
DOWNY UNIFIED SCHOOL DISTRIC
ELLSWORTH/SOMERSET V.F.D.
FALLSBURG VOLUNTEER FIRE
GEORGIA DEPARTMENT OF TRANSP
HOMESTEAD BOROUGH FIRE DEPAR
IOWA CORRECTIONAL INSTITUTION FOR WOMEN
KNOTT COUNTY FISCAL COURT
LA DEPT OF WATER & POWER
LEE COUNTY
LUMBERTON TWP
MACHIAS FIRE DEPT.
MCMAHAN VOL. FIRE DEPT.
MERCER COUNTY, NJ PARKS COMMISSION
MICHIUGAN CITY FIRE DEPARTME
MANTAGUE MICHIGAN SCHOOL DISTRICT
MORRIS CO.DEPT.OF PUBLIC WOR
N. SMITHFIELD WATER DEPT.
NORTH SHENANGO FIRE DEPT.
NOTTOWAY COUNTY SCHOOLBOARD
PAW-PAW VOLUNTEER FIRE DEPT.
POUGHKEEPSIE HIGHWAY DEPT.
QUINAULT HOUSING AUTHORITY
RED MESA SCHOOL DISTRICT
RICHLAND HIGH SCHOOL
SCIOTO TWP.
SNOWBIRD FIRE DEPARTMENT
ST JOHNS COUNTY REC & PARK 1
TAOS COUNTY PUBLIC WORKS
TORONTO CITY SCHOOL DISTRICT
TOWNSHIP OF WASHINGTON
UPPER TWP.RESCUE SQUAD
WAUKOMIS HIGH SCHOOL
YORK TOWNSHIP FDP

ALLEGHENY COUNTY ROADS DEPT.
BELL TOWNSHIP
BERKS FIRE WATER RESTORATION
BLAIRSVILLE MUNICIPAL AUTHORITY.
BOROUGH OF COLLINSWOOD FIRE DEPT.
BOROUGH OF EATONTOWN
BRIDGE CITY
CITY OF ALMAGORDO
CITY OF BARROW
CITY OF CAPE MAY, NEW JERSEY
CITY OF EDGEWATER, FL
CITY OF HORNELL
CITY OF IOLA
CITY OF LORAIN
CITY OF MARTINSVILLE
CITY OF OAK GROVE HEIGHTS
CITY OF PLEASANT HILL, MISSOURI
CITY OF WHITE PLAINS, NEW YORK
COLORADO SPRINGS POLICE DEPT
COLUMBIA COUNTY BOARD OF ED.
COUNTY OF LA PITCHNESS DETEN
CROOKED LAKE FIRE DEPT
DELBARTON FIRE DEPT.
DOVER TWP. PARKING AUTHORITY
EAST DERRY FIRE DEPT.
FAIR OAKS F.V.D
FORK TOWNSHIP
HERBER-OVERGAARD FIRE DIST.
HOOSAC WATER QUALITY DIST.
IRVONA VOLUNTEER FIRE CO.
LA COUNTY FIRE DEPARTMENT
LEBANON HIGH SCHOOL
LORDSBURG MUNICIPAL SCHOOLS
LUZERNE TOWNSHIP VFC
MALABAR FIRE DEPARTMENT
MENDOCINO COUNTY
METROPOLITAN WATER DISTRICT
MISSION VIEJO, CA SCHOOL DISTRICT
MONROE TOWNSHIP VOLUNTEER
MT. PLEASANT VFD
NEW CASTLE COUNTY
NORWOOD FIRE CO #1
ORLANDO COUNTY AVIATION
PIOCHE FIRE DISTRICT
PRINCE GEORGES COUNTY F.D.
RAASS BROS FOR ARMY RESERVE
REGIONAL DIST FRASER FT GEOR
SANTA CLARA COUNTY, CALIFORNIA
SHADY GROVE VALLEY FIRE
STATE OF PENNSYLVANIA
SUGARCREEK TOWNSHIP
TAOS MUNICIPAL SCHOOLS
TOWN OF COEBURN, VIRGINIA
TRIUNE-HALLECK FIRE DEPT.
WASHOE COUNTY
YELLOW SPRINGS SCHOOLS

OLYMPIA STEEL BUILDINGS.

SELF-STORAGE BUILDINGS

Olympia Self-Storage Buildings

Are you getting started or getting bigger?

QUALITY and RELIABILITY

The self-storage business has grown into a multi-billion dollar industry. Current businesses are expanding and new companies are starting up every day. The industry operates in all parts of the economy from residential neighborhoods to industrial parks, in urban areas and rural settings. Owners and managers require that their facilities meet and exceed industry standards for quality, reliability, convenience and accessibility and that's why they choose Olympia steel buildings for all their self-storage needs.

CONFIDENCE and ASSURANCE

If customer confidence is important to you, you must first have the assurance that your building is the best that money can buy. Olympia self-storage buildings and warehouses have confidence built into every unit. Your customers will be able to lockup their belongings and lockout their worries with an Olympia self-storage steel building. It is as easy as stow, go and know… that their property is safe and secure.

Factory Direct Pricing • 25 Year Warranty • Virtually Maintenance-Free
Factory In-House Engineering and Drafting Services

SELECTION and CUSTOMER SERVICE

As the owner of a self-storage facility you will love the features and benefits that an Olympia building offers. From a variety of options including eleven panel colors and four matching trim colors to the virtually maintenance-free, durable materials used in every Olympia building, you will be pleased with Olympia's quality, selection and unsurpassed customer service.

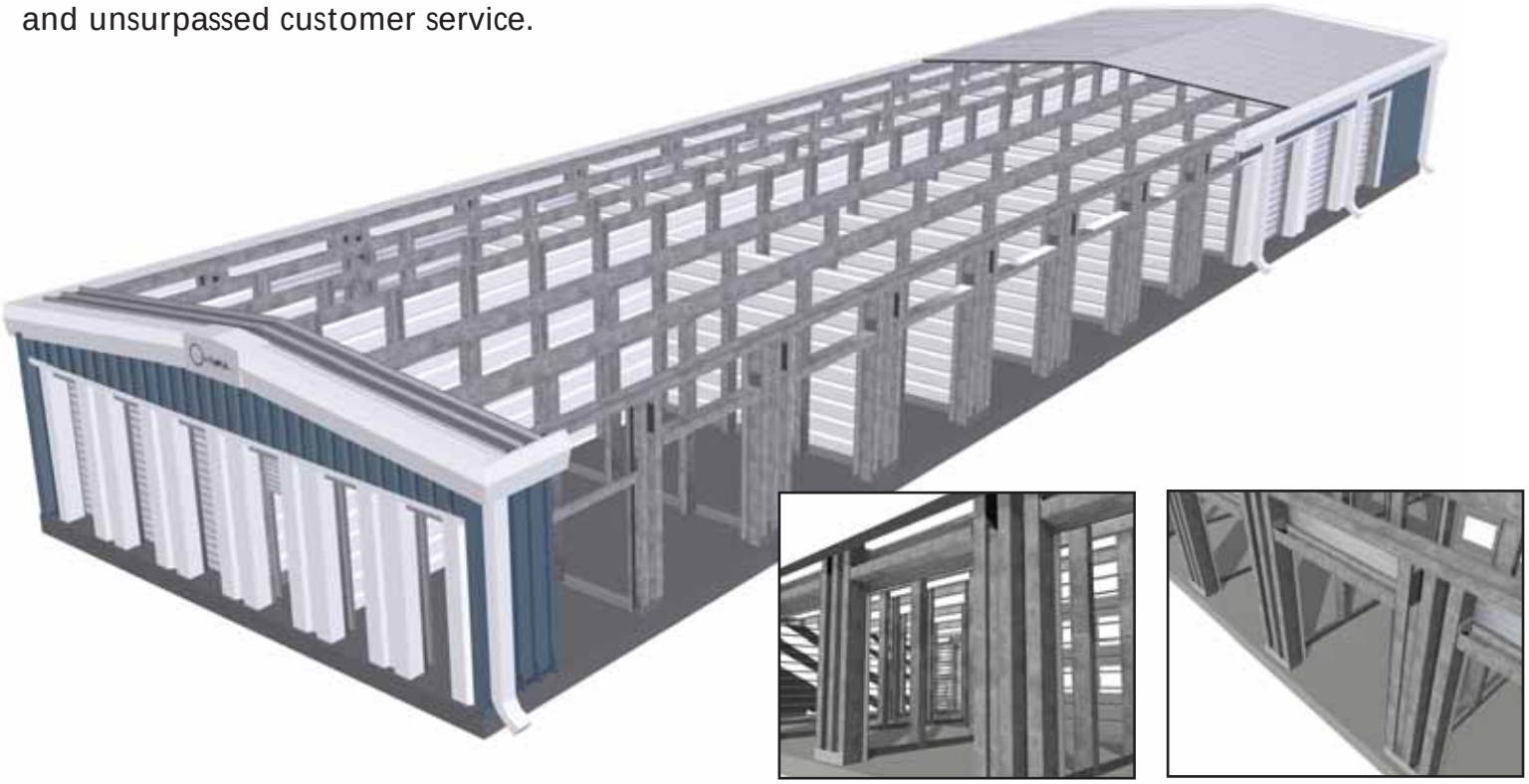

Save 50% to 60% Over Traditional Construction Costs • Made in USA
Galvanized Girts and Purlins • Simple and Economical to Erect

BENEFITS

- Knowledgable building consultants help you develop your plans cost effectively and efficiently by carefully guiding you through the purchase and design process.
- Experienced factory in-house engineers and drafting experts will design the facility that meets your every requirement.
- The highest quality standards are met and exceeded including all local building code requirements.
- Factory direct pricing ensures you of huge savings.
- Savings of 50% to 60% over traditional construction costs can be realized.
- A **25 year rust-performance warranty** covering all roof, wall and partition panels is standard with every building.
- A **35 year paint warranty** on all colored panels and trim guarantees you the best protection in the industry.
- Precision fabrication and concise assembly drawings mean simple and economical construction.
- All framing **hot-dip galvanized** - protects against rust.

ECONOMICAL and REMARKABLY AFFORDABLE

Olympia wants to be your self-storage partner, working with you to provide a secure, flexible and cost-effective storage alternative for your customers. Call our expert building consultants today to get the lowest possible price on the building that best suits your self-storage requirements. You'll find that an Olympia steel building is a very economical solution to your self-storage facility needs and remarkably affordable.

Highest Quality Standards • Expandable • Fully Customizable
Moveable Longitudinal Partitions • Eleven Panel Colors, Four Trim Colors

Panel Colors

SAND GOLD | BRITE RED | POLAR WHITE

LIGHTSTONE | PEARL GRAY | SLATE GRAY | HAWAIIAN BLUE

SAHARA TAN | RUSTIC RED | BURNISHED SLATE | FERN GREEN

Olympia buildings are precision coated with Akzo Nobel paints, a leading producer of paints, finishes and synthetic resins for industrial applications. Choose from **eleven panel colors** (above) and **four trim colors** (below).

POLAR WHITE | LIGHTSTONE | BURNISHED SLATE | FERN GREEN

FEATURES

- Eleven panel colors and four trim colors help you to create an esthetically pleasing appearance for your building.
- Precision fabrication allows the building to be erected quickly minimizing labor costs.
- All structrual and secondary framing is **hot-dip galvanized** making your Olympia self-storage building the best choice for maintenance-free operation
- Unlimited sizes accommodate the needs of many different customers.
- Units are fully customizable with a variety of ceiling lights and doors available.
- Two insulation systems are available.
- Buildings remain virtually maintenance-free for the life of the facility.
- Units can be easily expanded to accommodate future growth
- Steel panels and steel framing provide excellent fire resistance.

ALL STRUCTURAL AND SECONDARY FRAMING HOT-DIP GALVANIZED

- PROTECTS AGAINST RUST -

QUICK and EASY ASSEMBLY

After the foundation has been poured and the framing materials laid out for the entire building, the hardware is attached and the framing is connected. The sheeting for the interior walls is attached to the framing and each sidewall is raised into place and connected to the previous wall with the overhead girts.

The purlins connect the framing of the sidewalls and the overhead girts connect the sidewalls to the interior walls. Leveling occurs throughout this process to insure that the building remains square and temporary bracing is attached for stability and later removed once all of the framing has been erected.

All framing is secured to the foundation and additional framing is added to secure the door openings.

Sheeting is first fastened to the end walls. Then the sheeting between the doors is installed. An “L” shaped trim piece is installed over the door openings and a foam closure is fitted on that trim piece. This is followed by the sheeting along the roof line.

The roof construction begins with another closure piece placed at the edge of the building above the door openings on the framing. This is covered with a mastic adhesive strip and a moisture barrier is rolled into place with a mastic strip on the ridge of the previous piece of sheeting enabling a watertight seal when the roof sheeting is screwed down with the fasteners. This is repeated for the length of the roof.

Finally, the remaining roof trim is attached and the doors are installed.

www.olympiabuildings.com

1-888-449-7756

©2005 Olympia Steel Buildings All Rights Reserved

OLYMPIA

STEEL BUILDING SYSTEMS

guide to building specifications & accessories

OLYMPIA
STEEL BUILDING SYSTEMS

Tapered Rigid Frame

cross section

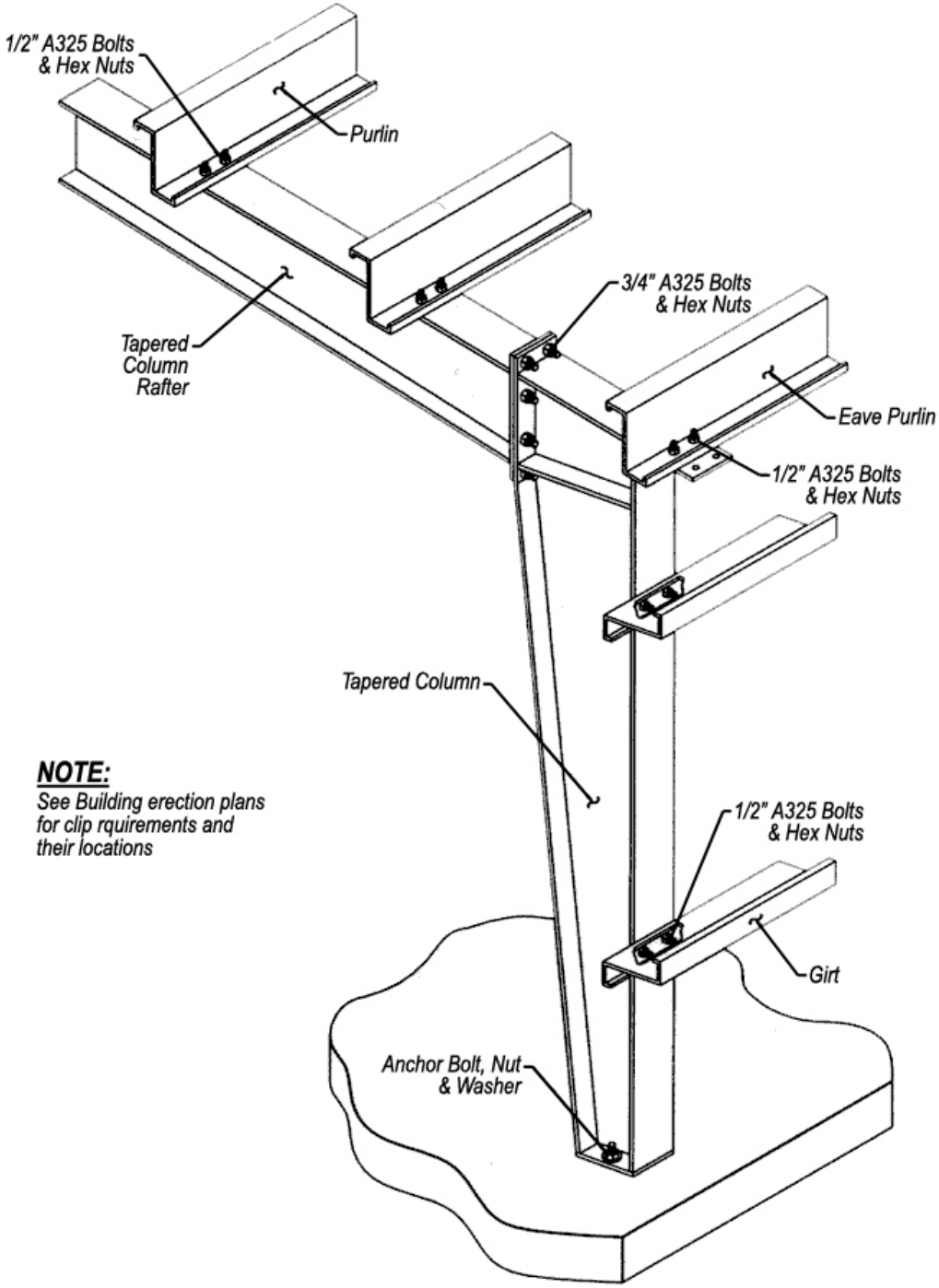

NOTE:
See Building erection plans for clip rquirements and their locations

Typical Framing:
Specific geometry and layout will vary according to design

The Drawings set fourth above are for prototype structures and may not reflect the building to be delivered upon a customer order. Modifications to components may be made based upon wind, snow, or collateral loads.

OLYMPIA
STEEL BUILDING SYSTEMS

Tapered Column

rigid frame system

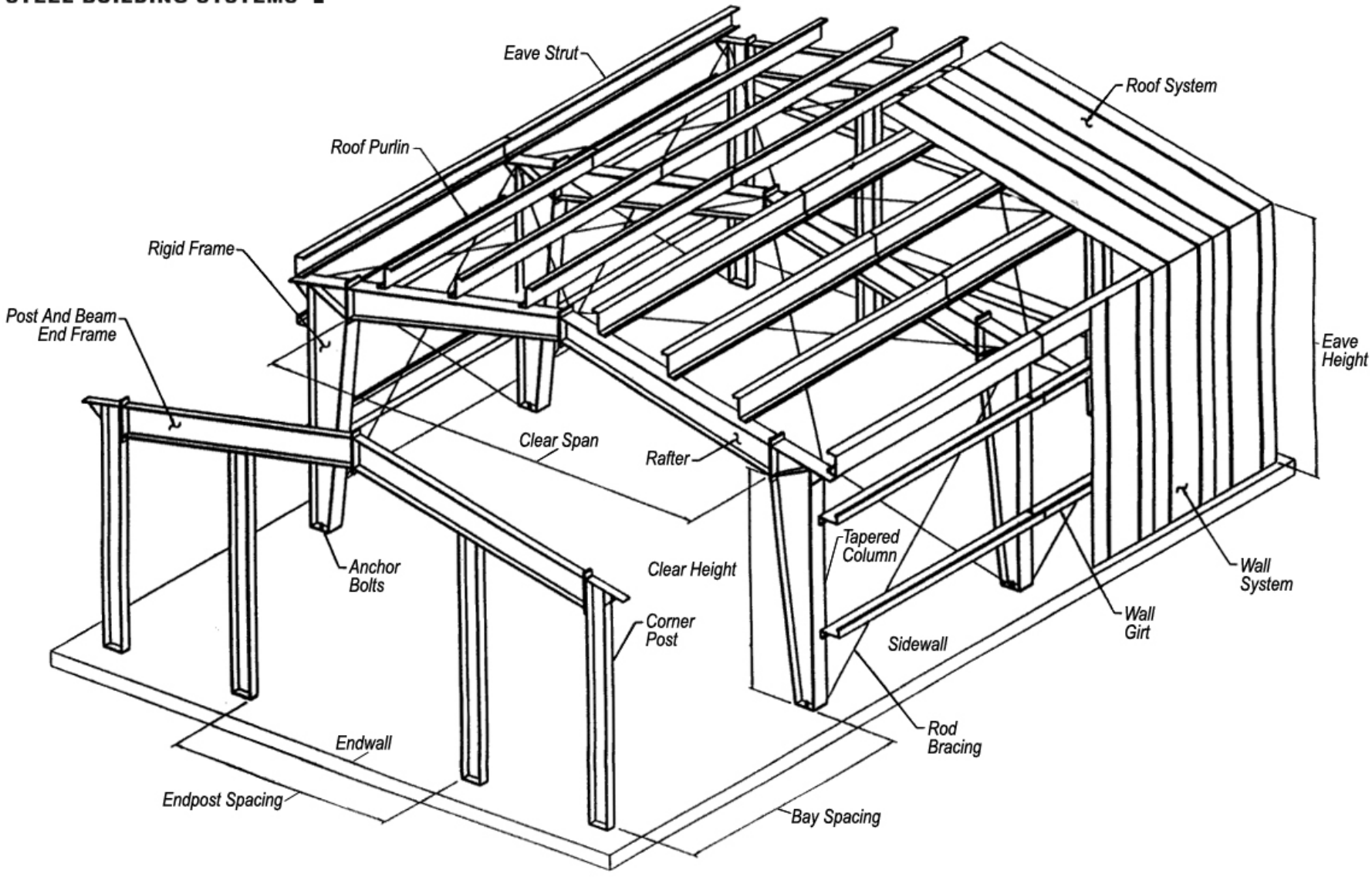

The Drawings set fourth above are for prototype structures and may not reflect the building to be delivered upon a customer order. Modifications to components may be made based upon wind, snow, or collateral loads.

OLYMPIA
STEEL BUILDING SYSTEMS

25 Year Warranty

on our self drilling stainless steel
roof screws with washer

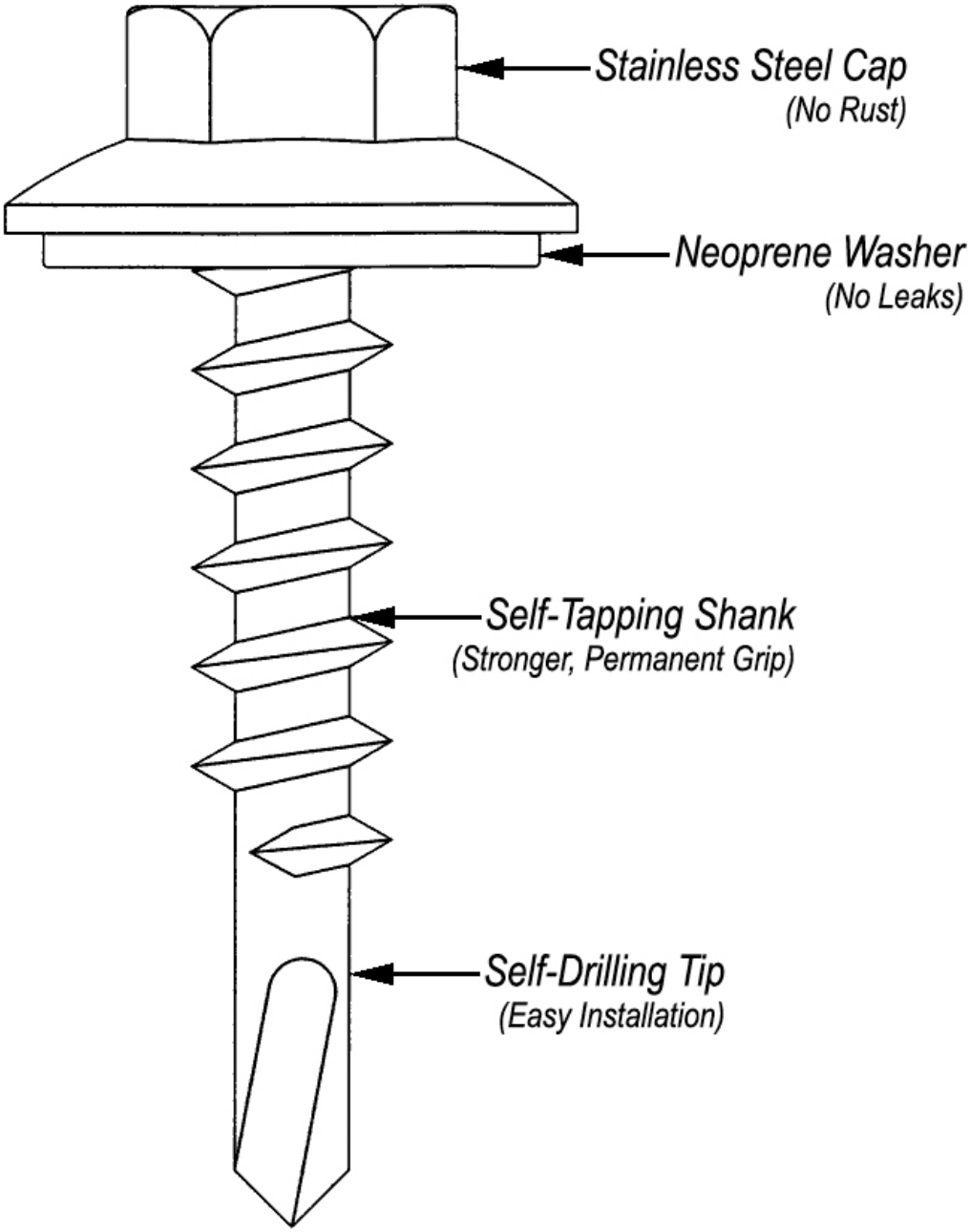

The Drawings set fourth above are for prototype structures and may not reflect the building to be delivered upon a customer order. Modifications to components may be made based upon wind, snow, or collateral loads.

OLYMPIA
STEEL BUILDING SYSTEMS

25 Year Warranty

on our purlin bearing rib roof panel

PBR Roof Panels

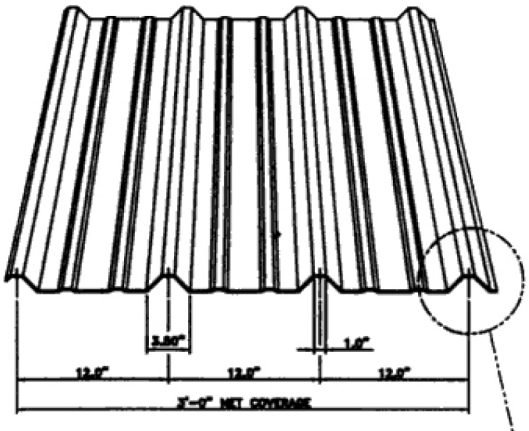

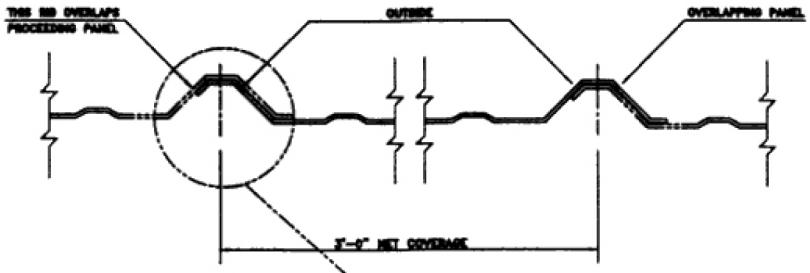

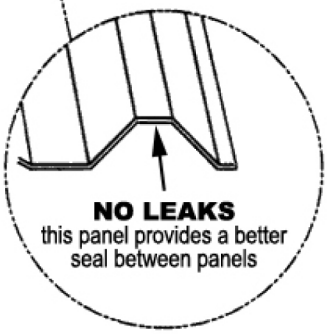

"R" Roof Panels

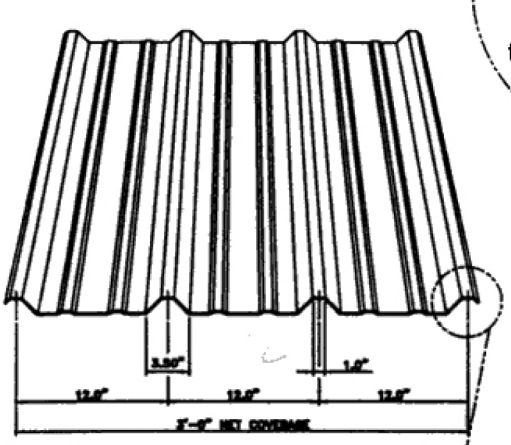

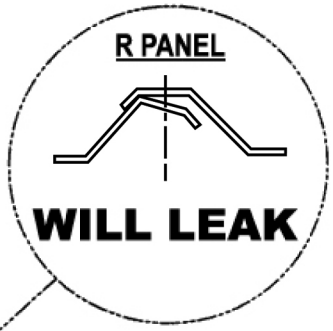

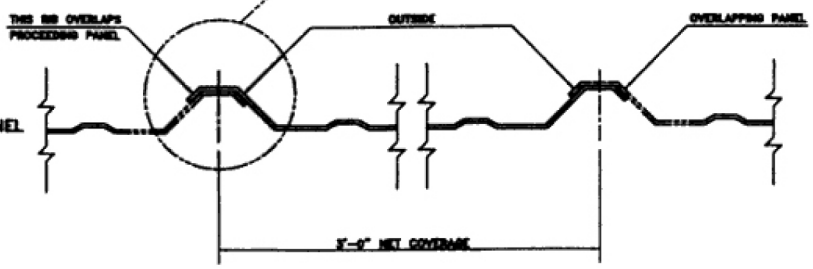

Panel leg on overlap does not return all the way to the bottom of the panel it is covering, allowing water to penetrate

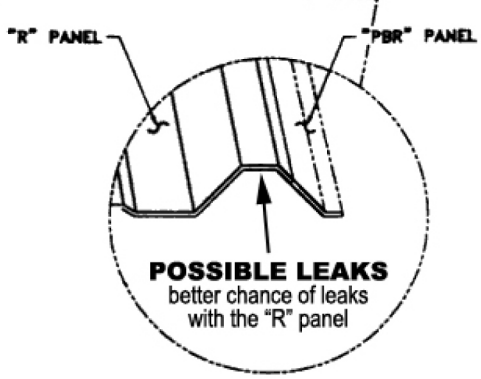

The Drawings set fourth above are for prototype structures and may not reflect the building to be delivered upon a customer order. Modifications to components may be made based upon wind, snow, or collateral loads.

OLYMPIA
STEEL BUILDING SYSTEMS

Building Trim

cross section

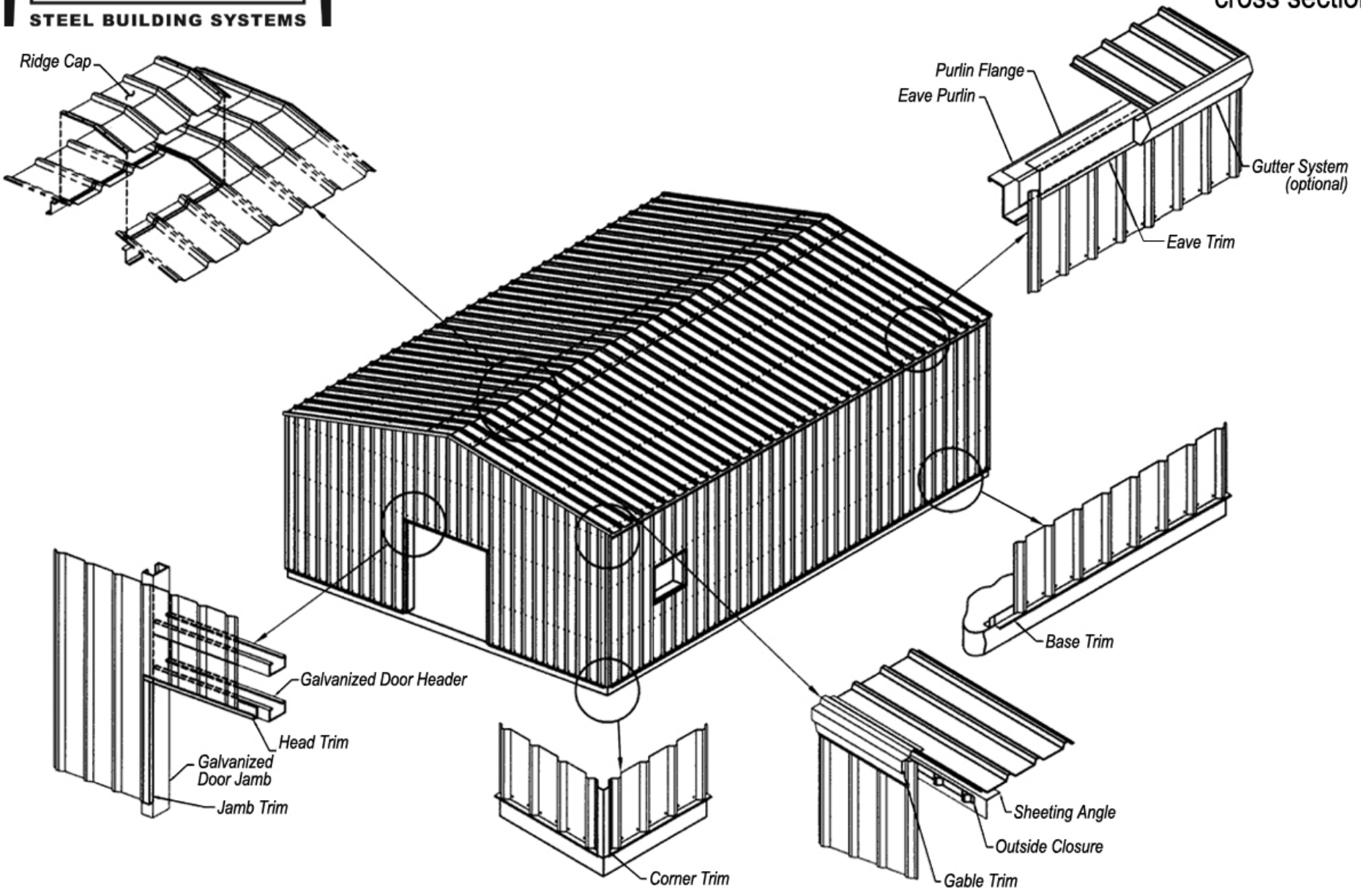

The Drawings set fourth above are for prototype structures and may not reflect the building to be delivered upon a customer order. Modifications to components may be made based upon wind, snow, or collateral loads.

OLYMPIA
STEEL BUILDING SYSTEMS

Accessories

Rubber Roof Jack

This rubber roof jack is designed to expand and contract around vent and exhaust pipes. The base is designed to provide a water tight seal on any panel configuration or roof pitch. Accommodates pipes up to 7" in diameter.

Ridge & Circular Ventilators

Stocked in 10' lengths for singular or continuous use. Our 9" throat ridge ventilators come with standard bird screen. We also have 20" & 24" round ridge vents. Ask a sales associate for more information.

Reinforced Translucent Skylights

These translucent fiber glass panels are a great way of allowing natural light into your new building. The panels have the same shape and contour as our roof and wall panels.Translucent panels are available with a UL class 90 wind code rating.

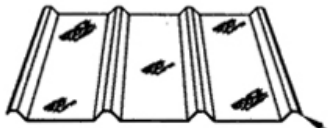

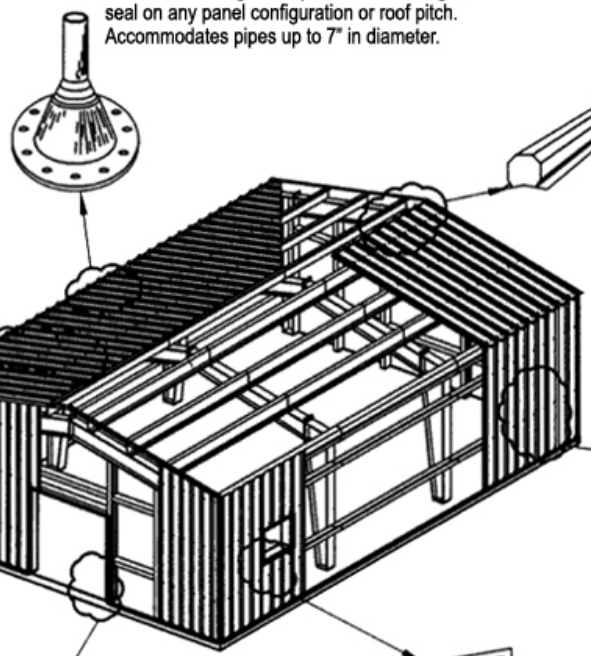

Walk Doors

Walk doors are offered in a 3' X 7' and 4' X 7' single swing door, or a 6' X 7' double swing with1.75" thick door leaves. Doors come complete with all the necessary installation hardware. Doors leaves may solid, or furnished with a narrow - lite of half glass panel.

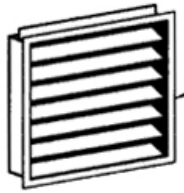

Wall Louvers

Wall louvers are available in 3' X 3', 4' X 3' and 3' X 4' sizes. Ask your sales associate for additional information.

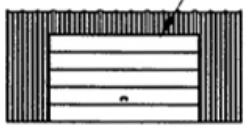

Framed Openings

Steel framed openings are available to provide framing and support for garage doors, and other accessory items we may not carry.

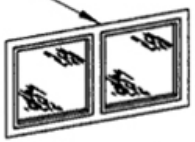

Horizontal Slide Windows

Aluminum horizontal sliding windows provide light and ventilation. HS windows are stocked in 3030, 4030, and 6030 sizes. Available in either insulated or non - insulated clear glass.

The Drawings set fourth above are for prototype structures and may not reflect the building to be delivered upon a customer order. Modifications to components may be made based upon wind, snow, or collateral loads.

GSA Contract Holder
Contract GS-07F-0312V

1-888-449-7756

Olympia Steel Buildings has been a leader in **pre-engineered steel buildings** for more than 40 years, supplying durable high quality pre-engineered rigid frame **steel buildings** for commercial, industrial, agricultural, and residential building construction.

Olympia Steel Buildings uses only Galvalume® steel, the highest quality, heaviest-gauge commercial U.S. steel available in the world and backed with a 25-year rust-through warranty from the steel mill. Each Olympia Steel Buildings **metal building package** includes engineered computer drawings and a comprehensive erection manual. Olympia Steel buildings are engineered to meet US, German, and European building codes. The factory design and detailed engineering of each and every building ensures that it will last a lifetime.

We know our business. For many years, **Olympia Steel Buildings** has provided quality pre-engineered **steel building systems** to commercial, industrial, residential and agricultural customers. As an Olympia customer you will receive prompt, accurate technical advice and superior customer service from our trained team of specialists. Your building package will include engineered computer drawings and a comprehensive erection manual. Olympia Steel Buildings distributes buildings across the United States and in countries all over the world. Our 40 years of metal building design and manufacturing experience produce top quality buildings at low prices.

With Olympia Steel Buildings, you can count on the best customer service, superior buildings, and the **best steel building warranties**.

- 25-year warranty on the roof
- 40-year warranty on the paint
- Lifetime warranty on the stainless steel screws for the roof
- 50-year warranty on the structural frames

We invite you to visit the **metal building manufacturing** plant in Ambridge, Pennsylvania, USA, where our steel buildings are manufactured. It is a sophisticated metal building manufacturing plant, using state-of-the-art machinery and maintaining the highest standards of quality control. The **steel building factory** can make rigid frame column-free steel buildings, completely clear span, with no posts, beams or columns in widths from 20 feet to 300 feet in unlimited lengths and up to 50, 60, even 70 feet high.

Olympia Steel Buildings sets itself apart by using better materials, better quality control, industry-leading warranties, and exceptional customer service.

"Our customers are small to medium sized to very large corporations. We sell to the end-user and to contractors."

"Most customers don't come in with an architectural plan. Sometimes they want masonry, glass, block or steel on the side of the building. Some buildings are more complex than others. We work with the customer to develop the building they require."

More people are turning to pre-engineered steel buildings due to the high cost of skilled labor and the high cost of using large, heavy steel beams. Pre-engineered steel buildings dispense with the trades. Their work is done in the factory and the building arrives as a huge modular kit ready to be bolted together.

Olympia's pre-engineered steel buildings are a popular choice

- Virtually maintenance free and ensure stability, strength, durability and resistance to weather and rust
- Backed by a 25-year steel mill warranty

- Built in a state-of-the-art steel metal building manufacturing facility by an experienced engineered building design team
- Backed by more than 40 years of metal building design experience
- Constructed of the highest-grade commercial U.S. steel
- Delivered with galvanized girts and purlins and extended weather-tight PBR roof panels

Olympia's unique truss-less design provides the greatest amount of clear span open space possible, **ideal for commercial building, industrial building and other applications that require a great deal of open space, such as riding arenas, heavy equipment garages, agricultural storage buildings, metal church buildings, sport arenas and gymnasiums.**

The buildings are completely customizable for applications such as:

- Agricultural buildings
- Commercial buildings
- Fire and EMS stations
- Gymnasiums
- Horse riding arenas
- Manufacturing
- Sport arenas
- Warehousing
- Barns
- Farm buildings
- Garages
- Horse barns
- Industrial buildings
- Mini-storage buildings
- Truck terminals

Olympia's work force continues to drive its growth. "Most of the people we have on staff we have trained and brought in ourselves. We have experienced people. We have a good mix and a lot of people who have been here more ten years or more."

When you choose Olympia Steel Buildings as the solution to your building needs, you can be confident that the Olympia team of professionals will provide you with the very best products and service at the lowest competitive price in the market today.

The service you receive after the initial sale is the true measure of your building provider's performance. Our team of experts is dedicated to customer service and making your building project the satisfying experience you deserve. Our goal at Olympia is to serve you, our valued customer. **Our motto: "Made of Steel, Built on Service".**

GSA Contract Holder
Contract GS-07F-0312V

1-888-449-7756

OLYMPIA STEEL BUILDINGS OUTSTANDING WARRANTIES AND FEATURES

✓ 25-YEAR SIX MONTH STEEL-MILL BACKED RUST THROUGH PERFORATION WARRANTY ON 26 GAUGE AZ55 GALVALUME® PBR ROOFING AND SIDING PANELS – WILL NOT RUPTURE, FAIL STRUCTURALLY OR PERFORATE

✓ PBR ROOF PANELS HAVE 1 ¼" CORRUGATION AND EXTENDED OVERLAP

✓ GALVANIZED SECONDARY FRAMING; ALL GIRTS, PURLINS AND C-CHANNELS – WILL NOT RUST! – HOT-DIPPED MILL-GALVANIZED FOR LONG-LIFE RUST PROTECTION

✓ 50-YEAR WARRANTY ON ALL STRUCTURAL COMPONENTS AGAINST DEFECTS IN MATERIALS AND WORKMANSHIP

✓ 40-YEAR WARRANTY ON AKZO NOBEL CERAM-A-STAR BAKED-ON SILICONIZED POLYESTER PAINT AGAINST PEELING, CHIPPING, CRACKING, BLISTERING

✓ 35-YEAR WARRANTY AGAINST CHALKING OR FADING ON AKZO NOBEL TRINAR PAINT COATING ON STANDING SEAM ROOFS

✓ SURGICAL STAINLESS STEEL CAPPED FASTENERS – LIFETIME WARRANTY AGAINST DEFECTS IN MATERIALS AND WORKMANSHIP, RUST AND DISCOLORATION, AND STRUCTURAL FAILURE

✓ FOAM CLOSURE STRIPS – INSIDE AND OUTSIDE – COMPLETELY SEAL THE BUILDING

✓ DIRECT GIRT-TO-COLUMN AND PURLIN-TO-RAFTER CONNECTIONS – NO WELDED CLIPS REQUIRED

✓ METAL EAVE CLOSURE TRIM – CORRUGATED ROOF PANEL

✓ HEAVY 16 GAUGE BASE ANGLE – GALVANIZED WITH BASE TRIM PACKAGE

✓ NEOPRENE WASHERS ON BOTH ROOF AND SIDING PANELS – PREVENTS OVER-DRILLING

✓1" WIDE MASTIC STRIP – DOUBLE BEADED AT END LAPS

✓ JAMB & HEADER J-TRIM – AROUND ALL FRAMED OPENINGS

✓ HEADER AND JAMB COVERS – OPENINGS COME READY FOR DOOR MOUNTING

✓ STANDARD AT NO EXTRA COST: CABLE X-BRACING PROVIDES ENORMOUS STRENGTH FOR WIND PROTECTION

✓ CERTIFIED AND STAMPED ENGINEER DRAWINGS WITH ANCHOR BOLT PLANS TO MEET YOUR LOCAL BUILDING CODES (2 SETS)

✓ CONSTRUCTION DRAWINGS & BUILDING ERECTION MANUAL

✓ DELIVERY OF THE BUILDING TO YOUR JOB SITE

ZEUS-SHIELD™

"The Seam Makes the Roof"

SERIOUS PERFORMANCE

THROUGH SUPERIOR DESIGN

INTRODUCING A REVOLUTIONARY STANDING SEAM ROOF THAT SUCCESSFULLY COMBINES GREAT LOOKS WITH THE HIGHEST WIND AND WATER RESISTANCE AVAILABLE.

DURABLE - SUSTAINABLE - LIFELONG

ZEUS-SHIELD STANDING SEAM ROOF SYSTEM

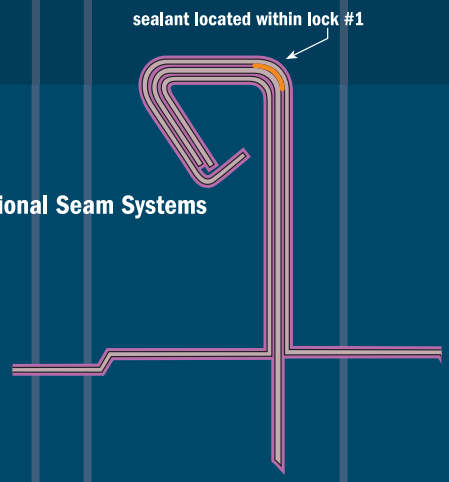

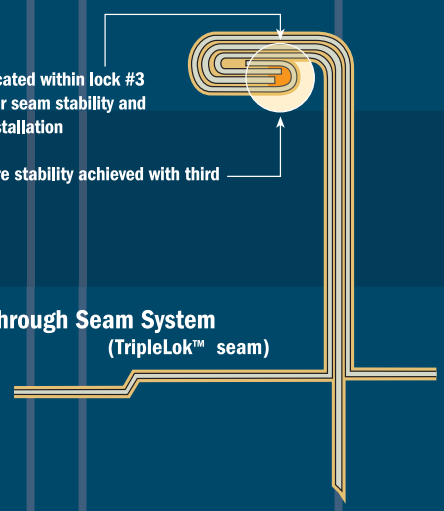

All Metal Roofs are not the Same

Most standing seam roof systems remain unchanged since 1969, relying on technology that is over 35 years old. New testing methods and wind uplift requirements have challenged the roofing industry to develop a new approach to roof performance. However, to meet those demands, most suppliers have only resorted to a patchwork of modifications on the existing systems.

Our System is in a "Class of its Own"

To meet the challenge, we researched the latest industry technology to develop a metal roof system with components and techniques that are cutting edge. Our roofing system not only meets today's needs, but fulfills the demands of tomorrow by addressing current and anticipated building codes and roofing requirements.

With durable panel profiles and innovative clips, our roofing system adds structural stability while allowing for thermal expansion and contraction. A patented design tackles the most stringent wind uplift requirements making our general construction and architectural standing seam roof systems truly in a class of their own.

Proof of this superior performance is documented in Factory Mutual (FM) Class 1-90 listing, Underwriters Laboratories (UL) 580 Class 90 listing and ASTM test results (shown on the back of this brochure).

NO OTHER ROOF COMES CLOSE

Architectural Panel

A NUMBER OF ADVANCED FEATURES COMBINE TO MAKE THIS METAL ROOFING SYSTEM THE BEST IN ITS CATEGORY.

Trapezoidal Panel

DEPENDABLE ROOF PERFORMANCE

The patented ZEUS-SHIELD™ panel system's technology offers considerable benefits to the roof designer, roof installer, contractor and building owner.

Take a closer look at some of the features and benefits:

Assured Weather Resistance

With ZEUS-SHIELD technology, the sealant is protected from severe seam stresses during high wind uplift because of its position within the seam. And the patented panel clip provides even greater air and water resistance, because it doesn't interfere with the sidelap sealant seal.

Fool-proof Seaming

Say goodbye to damaged panels from seamers that run off-course. With the ZEUS-SHIELD roof system, even inexperienced operators with little or no training can easily accomplish a good seam – because our seam is larger by design, allowing the seamer to lock onto the seam and stay locked until the seam is finished.

Seam all at Once

Unlike other systems on the market, the ZEUS-SHIELD roof system does not require seaming as each individual panel is installed. This is because the panel seam is partially formed automatically as the panels are placed, allowing seaming to be accomplished after the entire roof has been installed. The result is a roof that is installed quickly, efficiently and without costly wear and tear caused by excess traffic along the unfinished roof.

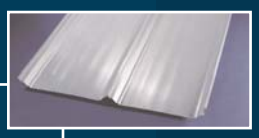

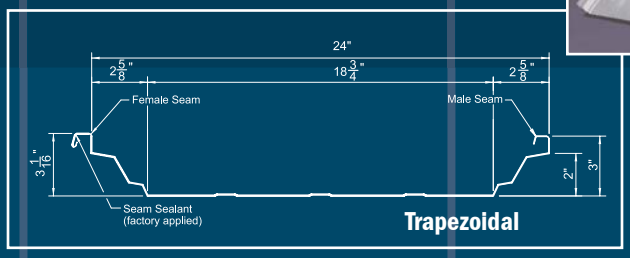

Trapezoidal

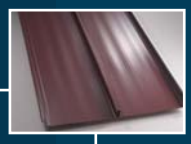

Architectural

Excellent Aesthetic Appearance Backed by Superior Structural Integrity

IT ALL BEGINS WITH A

SEAM

The Seam Makes the Roof

Recent changes in wind uplift resistance requirements and testing methods have called for a new approach to roof performance.

While other manufacturers continue to react to these changes by refitting their existing roof systems with "band-aid" solutions, we have invested in a totally new patented method and technology that is specifically designed to meet and exceed these new requirements.

Now you can have excellent aesthetic appearance in a standing seam roof without compromising superior wind and water resistance.

The breakthrough technology behind our seaming system is the reason why our metal roof is the best in its class for performance, reliability and cost efficiency.

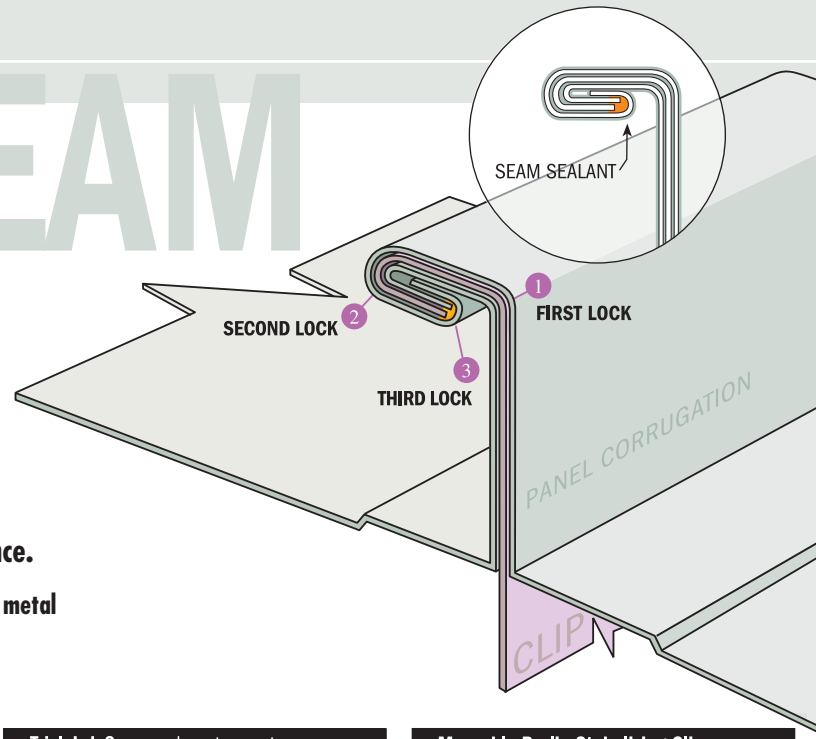

Our proven, patented seam provides superior wind and weather protection under all roof loading conditions. The seam geometry and seaming methods virtually assure that your installed roof will perform as it was designed at minimum cost.

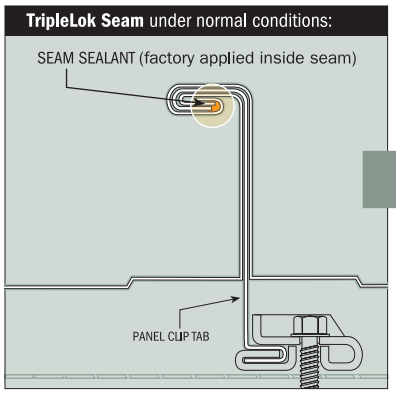

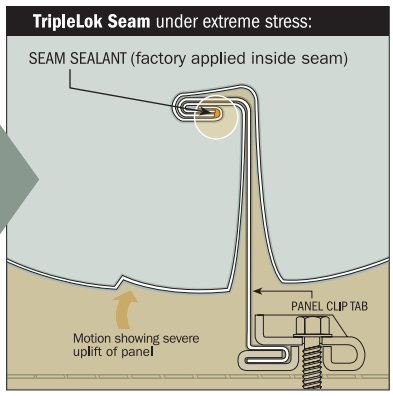

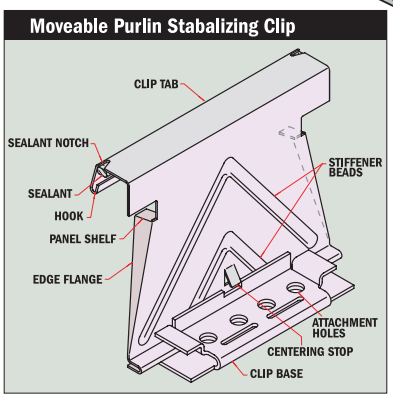

ZONEABILITY

Highest Roof Value Through Highest Wind Load Applications

The ZEUS-SHIELD system is specified to ZONE III (highest wind load) seaming requirements for the entire roof area. This preference ensures the total roof area is completed with the same seaming method for maximum uplift performance. There is no need to change purlin spacing, panel thickness or to install external clips over the seam. This results in a lower overall cost of both materials and installation man-hours.

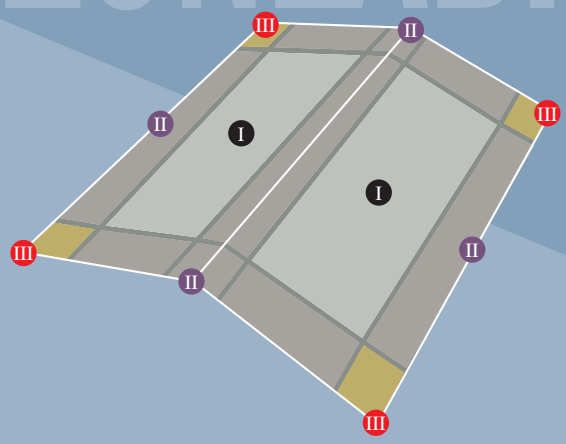

- I Zone I: LOWEST LOAD – main field of the roof (about 80% of total roof surface)
- II Zone II: INTERMEDIATE LOAD – area around the perimeter of the roof (about 15% of total roof surface)
- III Zone III: HIGHEST LOAD – at each corner of the roof (about 5% of total roof surface)

Other roof systems accommodate these various wind load zones by either one or a combination of the following: reduced purlin spacing at higher zone roof areas, thicker panel material in these areas, reduced panel width or exterior clamps over the panel seams. All of these conventional methods call for increased materials, inconsistent structural spacing and added complexity during installation.

Our patented roof system accommodates all three roof zones – simply and efficiently – by executing one of two seaming shapes. Each shape is formed in the field after the roof panels have been installed, meeting precise roof wind loading requirements for each roof zone without added materials or altering panel/purlin placement.

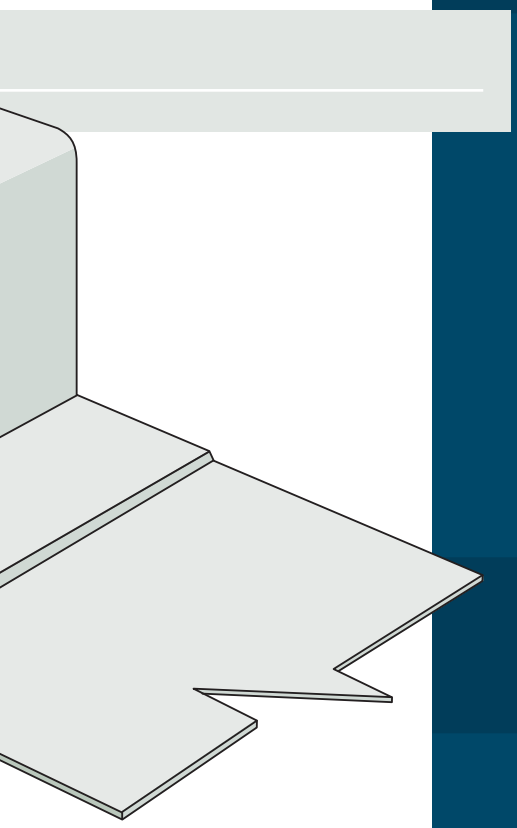

TripleLok

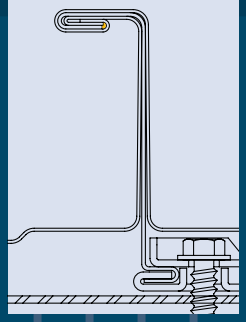

QuadLok

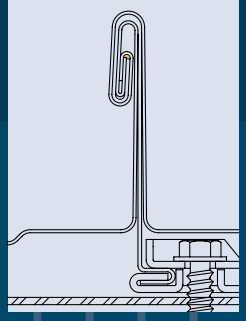

The TripleLok™ seam is accomplished by seaming the entire seam with an electrical seamer. This seam will provide an allowable wind uplift loading of 48 psf*.

1. It's the only seam on the market to use the 360°+ 90° seam, which:
   - structurally isolates the seam from the effects of severe wind loading by placing load resisting bends between the seam and the stresses of panel deflection.
   - eliminates the possibility of seam sealant dislodgment or separation during severe wind loading, thereby assuring a water resistant seam throughout the life of the roof.
2. For fool-proof installation all that is required is the placement of an electrical seaming machine on the seam to begin the seaming process. It's virtually impossible for the seamer to run off the seam until it comes to the end of the panel or is removed by the operator.

The QuadLok™ seam is only required in extremely high wind areas such as coastal regions. This seam is accomplished by seaming special roof zones with an electrical seamer, when required. This seam will provide an allowable uplift load of 63 psf* (or 97 psf over 2'6" purlin spacing).

By using the QuadLok seam, the perimeter conditions of roofs in high wind coastal locations can resist wind loads without exterior clamps and brackets that most other roof systems require to meet the Zone III uplift loads.

The QuadLok seam is the only seam on the market that provides higher uplift resistance with 24 gauge panel than all other roof systems using 22 gauge panels.

* when seamed with a 24 gauge panel over 5'0" purlin spacing

All of the above seams and load tolerances are calculated using ASTM E 1592 tests.

Step 1 - Engage Panel

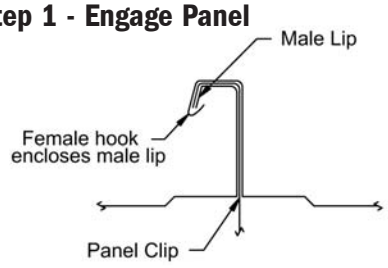

Step 2 - Manual Seaming Tool

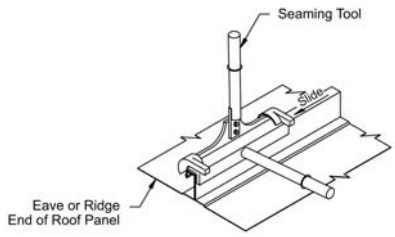

Step 3 - Mechanical Seaming Tool

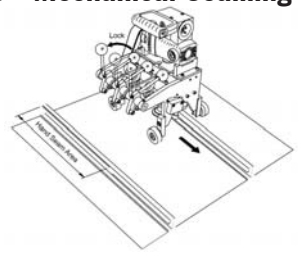

END RESULT

In almost every case, your entire roofing system is accomplished with one consistent purlin spacing, one panel size and one clip throughout making the ZEUS-SHIELD system...

Step 4 - Finished Seam

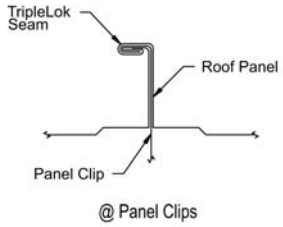

RELIABLE, ATTRACTIVE & COST-EFFICIENT.

UltraRidge™

Revolutionary UltraRidge Stops LEAKS and Eliminates CALLBACKS

It's a fact that the ridge details on some small standing seam roofs and all large standing seam roofs are open to danger due to thermal conditions. Over time many begin to fail or leak. This breakdown creates numerous call backs to repair and patch leaks that solve the problem.

We Now Have a Solution

UltraRidge provides a stationary ridge cap that allows a fixed eave roof system to float underneath the ridge flashing. Utilizing a flexible silicone membrane the ridge is watertight and impervious to adverse weather conditions, specifically exposure to ultra violet rays.

Designed to Allow for 6" Thermal Movement - 3" Uphill and 3" Downhill

Movement is restricted only by the roof panels' clip allowance. The ZEUS-SHIELD roof system offers clips with 3" movement. Without affecting the basic package, UltraRidge can easily adapt to a longer slide clip travel, such as ZEUS-SHIELD's wind uplift clips.

Designed to Easily Repair and Resolve Existing Ridge Problems

In addition, UltraRidge can replace existing ridge material. Simply remove the existing ridge cover and old sealant, install the adjustable cross supports upon which the system rests and install the UltraRidge in the standard manner.

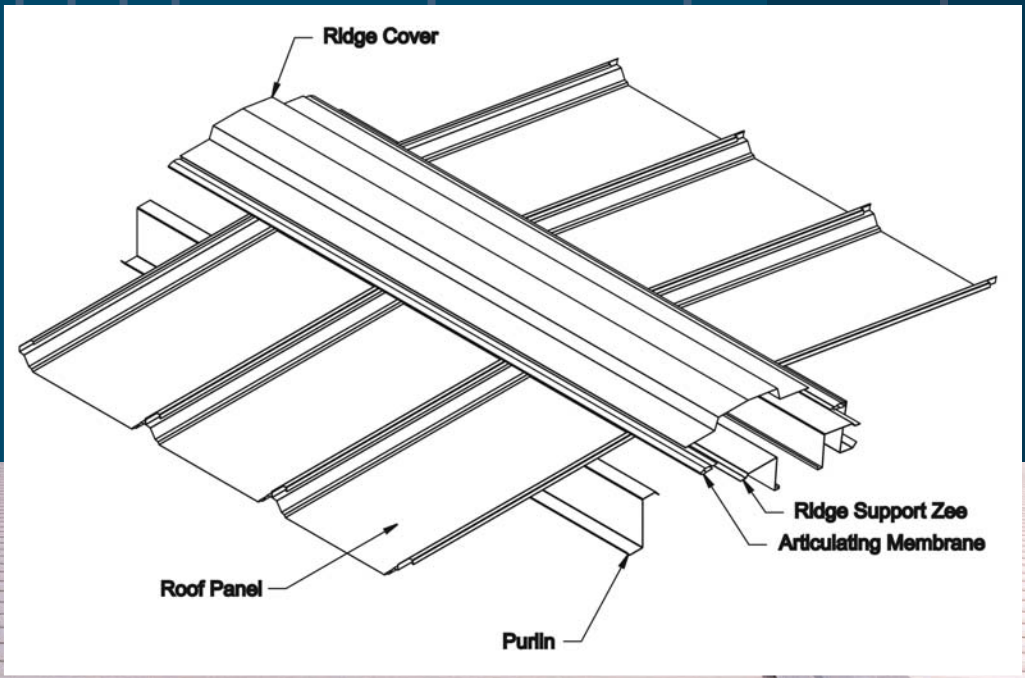

Cool Metal Roofing - Energy Efficient and Sustainable

The roof can have the greatest impact on the energy use of a building. Cool Metal Roofing is a family of sustainable, energy efficient roofing products comprised of unpainted and pre-painted metal finishes. It is available in a wide variety of finishes, colors, textures and profiles for steep-slope and low-slope roofing applications.

Generally, metal roofing's relative "coolness" is determined by its reflectivity and emissivity. As the diagram demonstrates, when solar radiation strikes a roof surface, some of that radiation - up to 70 percent - is reflected to the sky. Therefore, a roof surface with high reflectivity, as well as high emittance value, remains cooler and less heat is transferred into the building or convected into ambient air.

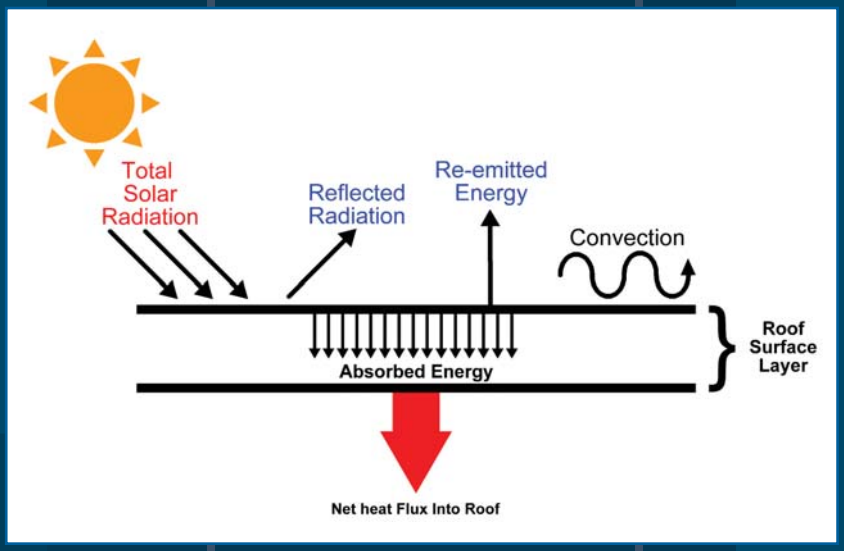

Mill-finish metal roof systems have very high solar reflectance but limited emittance. Metal roofs with oven-cured, pre-painted organic coatings that incorporate new "cool pigment" technology offer high total solar reflectance and high infrared emittance even with dark colors. Emissivity as high as 90% can be achieved for painted metal roofs.

Energy Savings up to 40%

The Cool roofs help reduce energy consumption by lowering cooling loads. Reflective roofs directly save up to 40% in heating and cooling energy costs, as reported by Lawrence Berkeley National Laboratory.

ZEUS-SHIELD roof panels are available with TRINAR® COOL CHEMISTRY® Series coatings which contain ceramic infrared reflective pigments. These special pigments are designed to reflect infrared energy while still absorbing visible light energy, thus appearing as the same color yet staying much cooler. Painted metal roofs retain 95% of their initial reflectance and emittance over time.

End Result

The end result is sustainable building material that can reduce peak energy demand and help to mitigate urban heat island effects.

TRINAR® (KYNAR 500®/HYLAR 5000®) Limited Warranty

Akzo Nobel warrants that TRINAR (KYNAR 500/HYLAR 5000) covered by this warranty will conform to the performance standards as listed below.

1. For 35 years, TRINAR (KYNAR 500/HYLAR 5000) will not peel, flake or otherwise lose adhesion to an extent that is apparent on ordinary outdoor visual observation.
2. For 35 years, roof panels of TRINAR (KYNAR 500/HYLAR 5000) will not chalk more than a number eight (8) rating when measured per ASTM D 4214, Method A.
3. For 35 years, roof panels of TRINAR (KYNAR 500/HYLAR 5000) will not change color more than five (5) E (delta E) Hunter units when measured per ASTM D 2244 on clean surfaces after removing dirt, other surface deposits and chalk per ASTM 3964.

Cool Roof Colors*

Snow White	Battleship Gray	Sagebrush
Hunter Green	Flint Gray	Autumn Red
Wedgewood Blue	Medium Bronze	Cardinal Red

* Printed colors are matched as closely as possible. If you require an exact color match, please ask for our color card.

Three Panel Profiles to Choose:

The patented ZEUS-SHIELD System consists of three roof panel profiles:

1. ZS-T24 - 24" panel predominately for low pitch roof applications up to 3/12 pitch.
2. ZS-A16 - 16" panel architectural designed series for steeper single or double sloped rectangular areas.
3. ZS-A18 - 18" panel architectural designed series for steeper single or double sloped rectangular areas.

The Following Recognized Certifications and Listings Have Been Earned:

Underwriters Laboratories UL-90 Classification Construction No. 506 • Factory Mutual Class 1-90 and 1-165 Listing
Corps of Engineers CEGS 07416 Uplift Test • ASTM E 1592 Uplift Test (three tests each span each gauge)
ASTM E 1680 Air Infiltration • ASTM E 1646 Water Leakage

The ZEUS-SHIELD panel system has been tested and certified by independent testing agencies and laboratories and achieved the loads and listings shown below:

Underwriters Laboratories Inc.

Construction No. 506, 506A, 506B - 16" & 18" panel Construction No. 556, 556A, 556B - 24" panel
ZEUS-SHIELD roof with TripleLok™ and QuadLok™ Seam

UL Listing	Panel Width	Panel Profile	Panel Gauge	Seam Type	Purlin Gauge	Purlin Spacing
UL-90	16" & 18"	ZS-A16 & ZS-A18	24 ga.	All Seam Types	16 ga	5'0"
UL-60	24"	ZS-T24	24 ga.	All Seam Types	16 ga.	5'0"
UL-90	24"	ZS-T24	24 ga.	All Seam Types	16 ga.	5'0"

Factory Mutual 4471 Uplift Test Results

ZEUS-SHIELD roof with TripleLok or QuadLok Seam

FM Listing	Panel Width	Panel Profile	Panel Gauge	Purlin Depth	Purlin Gauge	Purlin Spacing
1-90	16" & 18"	ZS-A16 & ZS-A18	24 ga.	8"	16 ga.	5'0"
1-165	16" & 18"	ZS-A16 & ZS-A18	22 ga.	8"	16 ga.	2'6"
1-60	24"	ZS-T24	24 ga.	8"	16 ga.	5'0"
1-90	24"	ZS-T24	24 ga.	8"	16 ga.	4'0"

ASTM E 1592 Uplift Test Results

ZEUS-SHIELD roof with TripleLok Seam

Purlin Spacing	Panel Width	Panel Profile	Panel Gauge	AISI Design Load	COE Design Load
2'6"	16"	ZS-A16	24 ga.	113.2	116.9
5'0"	16"	ZS-A16	24 ga.	56.6	58.5
2'6"	18"	ZS-A18	24 ga.	78.0	94.5
5'0"	18"	ZS-A18	24 ga.	36.4	44.1
2'6"	24"	ZS-T24	24 ga.	62.4	66.2
5'0"	24"	ZS-T24	24 ga.	42.1	44.1

ASTM E 1592 Uplift Test Results

ZEUS-SHIELD roof with QuadLok Seam

Purlin Spacing	Panel Width	Panel Profile	Panel Gauge	AISI Design Load	COE Design Load
2'6"	16"	ZS-A16	24 ga.	157.6	163.0
5'0"	16"	ZS-A16	24 ga.	78.8	81.6
2'6"	18"	ZS-A18	24 ga.	78.0	94.5
5'0"	18"	ZS-A18	24 ga.	46.8	56.7
2'6"	24"	ZS-T24	24 ga.	90.5	94.5
5'0"	24"	ZS-T24	24 ga.	48.3	50.4

ASTM E 1680 Air Infiltration all seams 24" wide panels = .0005 CFM/sq. ft.
ASTM E 1680 Air Infiltration all seams 16" wide panels = .005 CFM/sq. ft.
ASTM E 1646 Water Leakage all seams 16", 18" & 24" wide panels = None at 12 psf

- The above tabulated loads are generated from ASTM E-1592 testing
- Design loads contain a safety factor of calculated per AISI
- COE design load contains a 1.65 safety factor per COE 07416
- Allowable wind uplift loads have not been increased by 33% as allowed by some codes when wind load controls

OLYMPIA STEEL BUILDINGS®
Olympia Steel Buildings®
888-449-7756
www.olympiabuildings.com

ZEUS-SHIELD roof system and its components are covered by US Patent numbers 5,692,352 - 5,737,894 - 6,301,853 B1 and other patents pending.

©2008 Interactive Enterprises Corp.

1-888-449-7756

GENERAL SERVICES ADMINISTRATION
FEDERAL SUPPLY SERVICE
AUTHORIZED FEDERAL SUPPLY SCHEDULE PRICE LIST

On-line access to contract ordering information, terms and conditions, up-to-date pricing, and the option to create an electronic delivery order are available through GSA Advantage!™, a menu-driven database system. The INTERNET address for **GSA** *Advantage!* is **http://www.gsaadvantage.gov**

SCHEDULE TITLE: Federal Supply Schedule 056 – Buildings and Building Materials/Industrial Services and Supplies

CONTRACT NUMBER: GS-07F-0312V

CONTRACT PERIOD: May 15, 2009 – May 14, 2014

For more information on ordering from Federal Supply Schedules click on the FSS Schedules button at www.gsa.gov.

CONTRACTOR: Universal Steel Buildings Corp.
400 Island Avenue
McKees Rocks, PA 15136
Phone: (888) 449-7756 (Toll Free)
Fax: (412) 771-4295
Email: Jill@Factoryusa.com
www.OlympiaBuildings.com

CONTRACTOR'S ADMINISTRATION SOURCE: William Suhoski
400 Island Avenue
McKees Rocks, PA 15136
Phone: (412) 771-2944
Email: BSuho@aol.com

BUSINESS SIZE: Small Business

CUSTOMER INFORMATION:

1a. TABLE OF AWARDED SPECIAL ITEM NUMBERS (SINs)

SIN	DESCRIPTION
361-10A	Pre-Engineered AND Prefabricated Buildings and Structures for Storage Solutions

1b. LOWEST PRICED MODEL NUMBER AND PRICE FOR EACH SIN:

SIN	MODEL	PRICE
361-10A	30' X 50' X 14'	$14,504.98

2. MAXIMUM ORDER*: $150,000 per SIN, per order

*If the best value selection places your order over the Maximum Order identified in this catalog/pricelist, you have an opportunity to obtain a better schedule contract price. Before placing your order, contact the aforementioned contractor for a better price. The contractor may (1) offer a new price for this requirement (2) offer the lowest price available under this

contract or (3) decline the order. A delivery order that exceeds the maximum order may be placed under the schedule contract in accordance with FAR 8.404.

3. MINIMUM ORDER: None.

4a. GEOGRAPHIC COVERAGE: 50 U.S. States, Washington DC, and US Territories

5. POINTS OF PRODUCTION: 400 Island Avenue, McKees Rocks, PA 15136

6. DISCOUNT FROM LIST PRICES: GSA net prices shown

7. Quantity Discounts: +1% discount for orders over $150,000

8. Prompt Payment: 1% 15, Net 30 Days

9. Government Purchase Cards are accepted.

10. FOREIGN ITEMS: None

11a. TIME OF DELIVERY: 8 – 16 weeks ARO per location.

11b. EXPEDITED DELIVERY: Call for availability

11c. OVERNIGHT AND 2-DAY DELIVERY: None

11d. URGENT REQUIREMENTS: None

12. FOB POINT: Origin Prepay and Add (Origin – Prepay and actual freight charge added to invoice)

13a. ORDERING ADDRESS: Universal Steel Buildings Corp.
400 Island Avenue
McKees Rocks, PA 15136
1-888-449-7756

13b. ORDERING PROCEDURES: For supplies and services, the ordering procedures, information on Blanket Purchase Agreements (BPA's), a sample BPA and Federal Acquisition Regulation (FAR) 8.405-3 can be found at the GSA Schedules homepage at http://www.gsa.gov

14. PAYMENT ADDRESS: Same as ordering address

15. WARRANTY PROVISION: Standard Commercial Warranty.

- AZ55 Galvalume PBR roof sheeting, 26 gauge, 80,000 psi – 25-year 6-month rust through perforation warranty
- Surgical stainless steel capped fasteners – Lifetime warranty
- Siliconized polyester baked-on enamel paint – 40-year warranty against peeling, flaking, blistering, chalking or fading –- various colors available.
- 50-year warranty against defects in materials and workmanship on all main frame structural components

16. EXPORT PACKING CHARGES: Not Applicable

17. TERMS AND CONDITIONS OF GOVERNMENT PURCHASE CARD ACCPETANCE: Not Specified

18. TERMS AND CONDITIONS OF RENTAL, MAINTENANCE, AND REPAIR (IF APPLICABLE): N/A

19. TERMS AND CONDITIONS OF INSTALLATION (IF APPLICABLE): N/A

20. TERMS AND CONDITIONS OF REPAIR PARTS INDICATING DATE OF PARTS PRICE LISTS AND ANY DISCOUNTS FROM L IST PRICES (IF AVAILABLE): N/A

20a. TERMS AND CONDITIONS FOR ANY OTHER SERVICES (IF APPLICABLE): N/A

21. LIST OF SERVICE AND DISTRIBUTION POINTS (IF APPLICABLE): N/A

22. **LIST OF PARTICIPATING DEALERS (IF APPLICABLE):** N/A

23. PREVENTIVE MAINTENANCE (IF APPLICABLE): N/A

24a. SPECIAL ATTRIBUTES / ENVIRONMENTAL ATTRIBUTES:

- FEMP Energy Efficiency Item – Meets Federal Energy MGMT Program energy efficient levels as required by EO 13123 and 13221
- Comprehensive Procurement Guidelines (CPG) compliant – meets/exceeds EPA Recovered Material Advisory Notice (RMAN) standard
- Recycled Content – 70-72%
- Low Volatile Organic Compounds (VOC – paints)
- Lead-Free Item According to ASTM/EPA test methods
- Chlorine Free
- Ozone Safe
- CFC-Free
- ODS-Free
- Chromate-Free Item According to ASTM/EPA test methods
- Mercury-Free Item According to ASTM/EPA test methods
- Benzene-Free Item According to ASTM/EPA test methods
- NESHAP Compliant Item as established by National Emission Standard for Hazardous Air Pollutant (NESHAP) regulation
- GreenSeal Item – Certified to meet or exceed voluntary standards for environmental preferable as established by GreenSeal

LEED®, "Leadership in Energy and Environmental Design" is a program that promotes Green Building values of sustainability, energy efficiency, and environmental responsibility. Developed by the U.S. Green Building Council (USGBC), "LEED is an internationally recognized certification system that measures how well a building or community performs across all the metrics that matter most: energy savings, water efficiency, CO2 emissions reduction, improved indoor environmental quality, and stewardship of resources and sensitivity to their impacts." http://www.usgbc.org

Five of six LEED categories are applicable to Olympia Steel pre-engineered buildings:

- Sustainable Site
- Energy and Atmosphere
- Materials and Resources
- Indoor Environmental Quality
- Innovation and Design Process

Building with Olympia Steel Buildings can earn your building points toward LEED® certification in the following areas:

- Sustainable Sites 7.2 – Heat Island Effect – Roof
- Materials and Resources 5.1 – Recycled Content
- Materials and Resources 5.2 – Recycled Content
- Exemplary Performance - Recycled Content 70-72%

Consult with your LEED-Accredited consultant about all the ways your building project may achieve LEED points.

24b. Section 508 compliance for EIT: N/A

25. DUNS NUMBER: 361420953

26. REGISTERED WITH CCR