General Services Administration

Federal Supply Schedule
Authorization Federal Supply Schedule Price List

Schedule Title: **FSS 056** - Building and Materials/Industrial Services and Supplies

FSC Group: **61** - Alternative Energy Solutions, Power Distribution Equipment

SIN: **412-99** - Introduction of New Services and Products related to Power Distribution Equipment

Contract Number: GS-07F-0422W

Contract Period: May 15, 2010 to May 14, 2015

JDK Industry Inc., dba Power Shaver
7904 Excelsior Avenue
Orangevale, CA 95662
Toll-fee: (888) 976-9375
Fax: (916) 988-6180
www.powershaver.com

Contact: Lisa Knapp
lisa@powershaver.com

Business Size: Small Business

Online access to contract ordering information, terms and conditions, up-to-date pricing, and the option to create an electronic delivery order are available through GSA Advantage, a menu-driven database system.
The internet address is GSAAdvantage.gov.

For more information on ordering from Federal Supply Schedules click on the FSS Schedule button at fss.gsa.gov

Customer Information

1a. Table of award special item number(s) with appropriate cross reference to item descriptions and awarded price(s): **412-99**

1b. Identification of the lowest priced model number and lowest unit price for that model for each special item number awarded in the contract. This price is the Government price based on a unit of one, exclusive of any quantity/dollar volume, prompt payment, or any other concession affecting price. Those contracts that have unit prices based on the geographic location of the customer, should show the range of the lowest price, and cite the areas to which the prices apply: **SIN: 412-99 Item no. XL-R $997.48**

1c. Hourly Rates: **Not applicable**

2. Maximum Order: **$125,000.00**

3. Minimum Order: **$100.00**

4. Geographic Coverage: **Domestic and International**

5. Point(s) of Production: **Oakdale, CT (New London County) USES MFG INC**

6. Discount From List Prices: **10% from the accepted pricelist**

7. Quantity Discounts: **3% for 10 or more units purchased, 5% for 15 or more units purchased**

8. Prompt Payment Terms: **Net 30**

9. Government Purchase Cards: **Accepted at, below and above micro-purchase threshold**

10. Foreign Items: **None**

11a. Time of Delivery: **60 days ARO**

11b. Expedited Delivery: **30 days ARO**

11c. Overnight and 2-day Delivery: **None**

11d. Urgent Requirements: **Power Shaver acknowledges the "Urgent Requirements" clause of its contract and vised agencies that they may also contact the Contractor's representative to effect a faster delivery.**

12. F.O.B. Point: **Origin-Prepay and Add**

13a. Ordering address:

Power Shaver
7904 Excelsior Avenue
Orangevale, CA 95662

13b. Ordering procedures: **For supplies and services, the ordering procedures, information on Blanket Purchase Agreements (BPA's) are found in Federal Acquisition Regulation (FAR) 8.405-3.**

14. Payment address:

Power Shaver
7904 Excelsior Avenue
Orangevale, CA 95662

15. Warranty Provision: **Standard Commercial Warranty. Contact contractor for a copy of the warranty.**

16. Export Packing Charges: **Not applicable**

17. Terms and conditions of Government purchase card acceptance (any thresholds above the micro-purchase level): **Not applicable**

18. Terms and conditions of rental, maintenance and repair: **Not applicable**

19. Terms and conditions of installation: **Not applicable. Contact contractor for installation instructions.**

20a. Terms and conditions of repair parts indicating date of parts price lists and any discount from list prices: **Not applicable**

20b. Terms and conditions for any other Services: **Not applicable**

21. List of service and distribution points: **Not applicable**

22. List of participating dealers: **Not applicable**

23. Preventative maintenance: **Not applicable**

24a. Special attributes: **Not applicable**

24b. Section 508 Compliance for EIT - EIT standards can be found at: www.Section508.gov: **Not applicable**

25. Data Universal Number System (DUNS) number: **03-606-8430**

26. Notification regarding registration in System for Award Management (SAM) database: **Power Shaver is currently registered and active in SAM and CCR**

POWER SHAVER
Energy Saving Systems®

GSA Contract Holder
Contract Number GS-07F-0422W

Table of Contents

GSA Catalog Cover Sheet 1-3

Table of Contents 4

GSA Price List 5

Letter from John Knapp regarding the USES® Technology with Graphs ..... 6 - 13

USES® Shunt Efficiency System

USES® Information 14

USES® Certificates and Approvals 15

UL Characterization 16

But How Does It Work 17

Not Just A Big Fish Story 18

Effective Energy Conservation 19

Photo and Technical Specifications ..... 20 - 21

A Short List of Customers 22

USES® White Papers

United States Patent 23

Faraday's Law ..... 24 - 25

UL Report ..... 26 - 29

Theory of USES Operation ..... 30 - 31

CSA Report ..... 32 - 44

Canceling Reactive Current ..... 45 - 47

Controlling Imbalance in Weak Utility Systems ..... 48 - 60

GSA Price List

USES® Shunt Efficiency System

XL-R, Residential Unit..... $997.48
Estimated Savings of .75 kW - 1.0 kW/ kWh reduction per hour

XL-1 120/240 Volt, Single Phase Commercial / Large Residential $1,586.90
Estimated Savings of 1.2 – 1.7 kW/kWh reduction per hour

XL-3D 208 Volt, Three Phase Commercial $4,080.60
Estimated Savings of 3.0 – 4.0 kW/kWh reduction per hour

XL-3D 408 Volt, Three Phase Commercial $6,347.61
Estimated Savings of 4.5 – 6.0 kW/kWh reduction per hour

XL-3Y 480 Volt, Three Phase Commercial $6,347.61
Estimated Savings of 3.5 – 4.5 kW/kWh reduction per hour

USES® (Universal Shunt Efficiency System) Information

On the Power Shaver website, www.PowerShaver.com, there are many downloadable pdf's of white papers and spec sheets. Power Shaver holds the GSA contract for USES® technology, GS-07F-0422W, under the category of "Alternative Energy Solutions." We are finding the kWh reductions are much greater now, compared to the UL, CSA and performance patent testing in the early 90's (as stated on the spec sheet) because of the dramatic increase of harmonic currents.

The USES® technology is dynamic, passive, resonance-free and reduces kW demand and kWh consumption through **FIVE** methods:

First: The USES® system employs magnetic phase balancing of voltage and current to reduce waste, demand, friction and heat in loads.

Second: Passive resonance free power factor correction, to reduce the demand of reactive non-power currents and the associated penalties.

Third: Harmonic filtering of non-power currents and harmonics, to reduce the billed kWh consumption and improve power quality.

Fourth: Transient energy conversion through one of the surge protections self-healing magnetic chokes. Energy above and below the operational voltage of a facility is absorbed, reconstituted and returned to the customer as usable power.

Fifth: Is the ability, through its **proprietary** chokes, to generate wattage from the magnetic field of each phase, per Faraday's and Lenz's Laws, that is injected into the adjacent phases as usable power further reducing magnetic fields. It has been found that the unique arrangement of chokes provides substantial reductions in power usage, especially for inductive loads in an industrial application. The immediate benefit is a verifiable reduction of electric utility bills. Additionally, equipment life is increased while maintenance and downtime are reduced.

The USES® technology employs self-healing magnetic chokes and metal oxide varistors as its two forms of surge and spike protection. The USES® units are not custom built per loads, but are specifically and intentionally placed throughout a facility according to the operational demands. They will protect against damage from surges sags and phasing and are maintenance free. Life expectancy is now approximately 15 to 20 years. USES® is VFD or any control system compatible.

John D. Knapp
President/CEO

POWER SHAVER
Energy Saving Systems®

GSA Contract Holder
Contract Number GS-07F-0422W

Recording Explanation

Following this document are six electrical demand recording graphs. They consist of the real, apparent and reactive power, power factor, current and voltage recorded during a USES® performance verification on a 130 HP air handler with a VFD. This Timed Interval Sampling method of demand reduction verification is done while recording the power demand on the line side of the loads motor control center using a National Institute for Standards and Testing certified true RMS power data logger.

You will see, as noted on the real power graph, the times at which the USES® technology was turned on and off. The average power demand reductions, voltage and efficiency increases as verified on the graphs area as follows.

Real Power	**4.57 kW reduction**
Apparent Power	**11.41 kVa reduction**
Reactive Power	**42.52 kVar reduction**
Current	**13.3 amps per phase reduction**
Power Factor	**4.63 increase in efficiency**
Voltage	**.536 increase per phase**

These results verify the ability of the USES® technology, in this application, and confirm that a properly engineered system will reduce the electrical demand and consumption verified at the service entrance, for an entire facility improving power quality, efficiency, and capacity while providing two forms of superior surge protection.

Because the average utility revenue meter measures their customer's energy usage somewhere between real and apparent powers depending on their efficiency, power condition and power quality it is possible for the dynamic USES® technology to reduce a higher percentage of kWh in facilities with below average power conditions.

Power Shaver looks forward to meeting your energy and financial conservation goals.

Thank you,

John D. Knapp
President/CEO

Hotel / Casino : Nevada, USA

3/18/2010 8:57:41 AM - 3/18/2010 9:17:56 AM

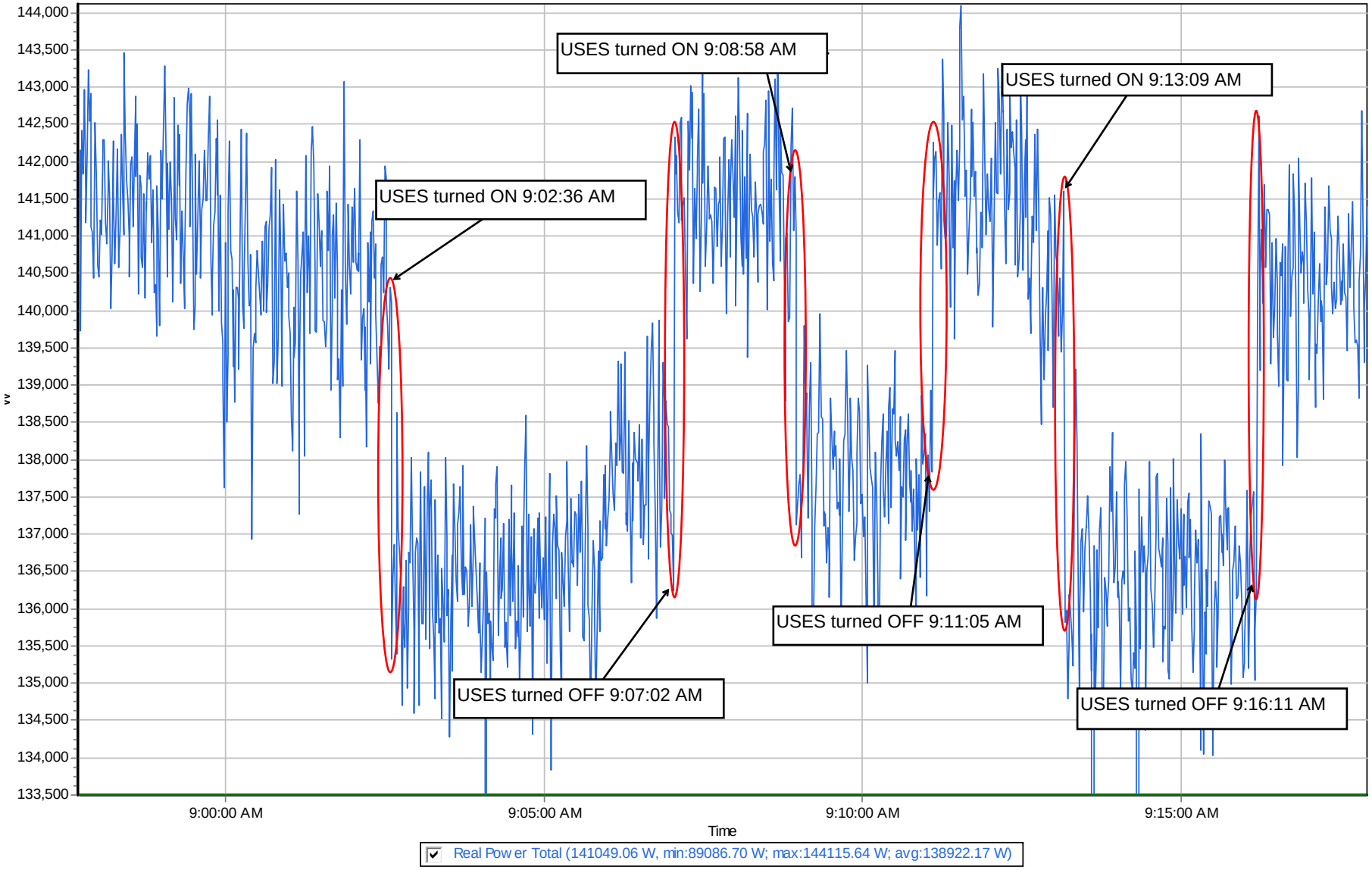

Hotel / Casino : Nevada, USA

3/18/2010 8:57:41 AM - 3/18/2010 9:17:56 AM

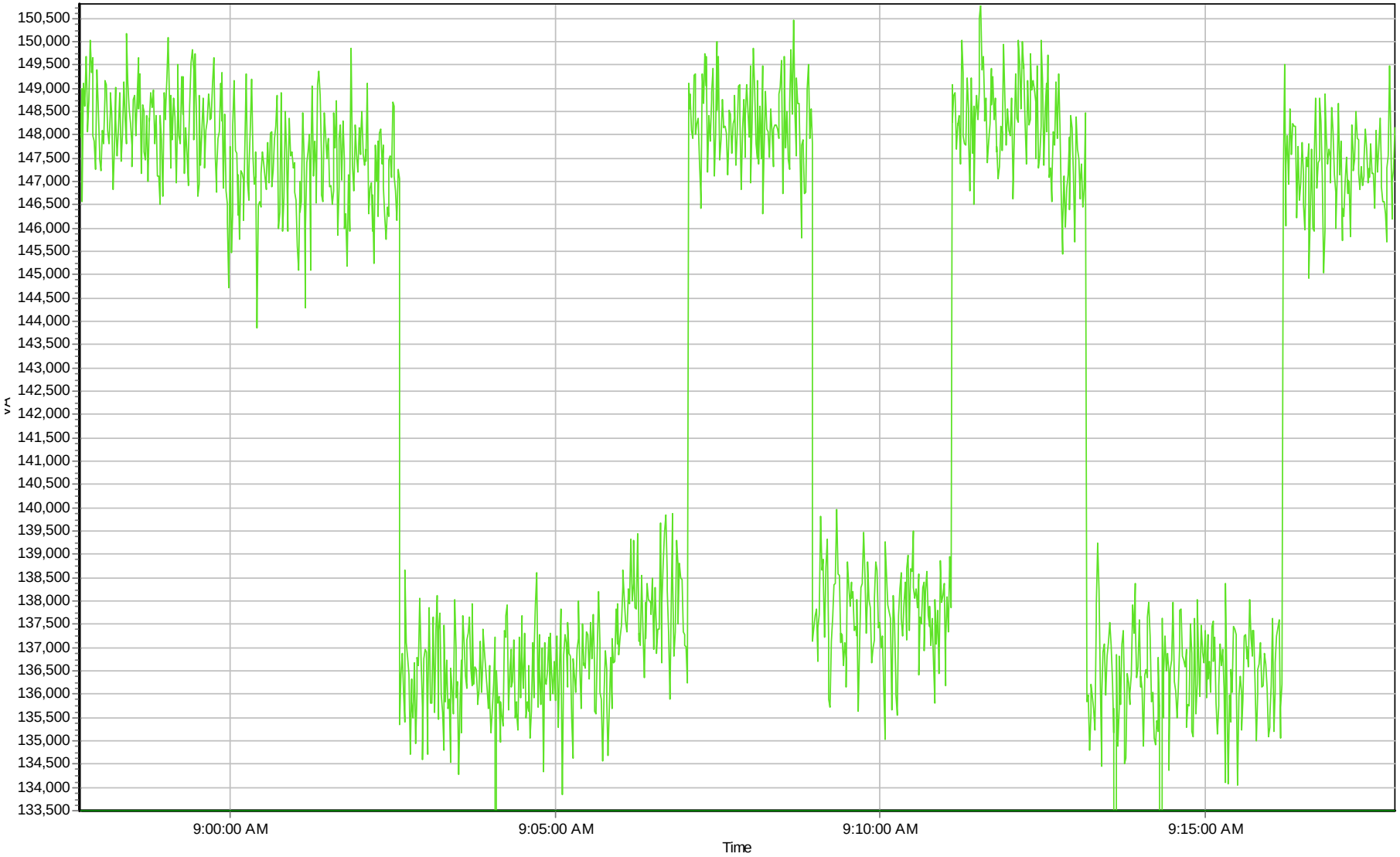

Apparent Power Total (149391.11 VA, min:89106.56 VA; max:150806.88 VA; avg:142537.40 VA)

Hotel / Casino : Nevada, USA

3/18/2010 8:57:41 AM - 3/18/2010 9:17:56 AM

Reactive Power Total (44080.16 VAR, min:1508.64 VAR; max:45064.77 VAR; avg:24363.16 VAR)

Hotel / Casino : Nevada, USA

3/18/2010 8:57:41 AM - 3/18/2010 9:17:56 AM

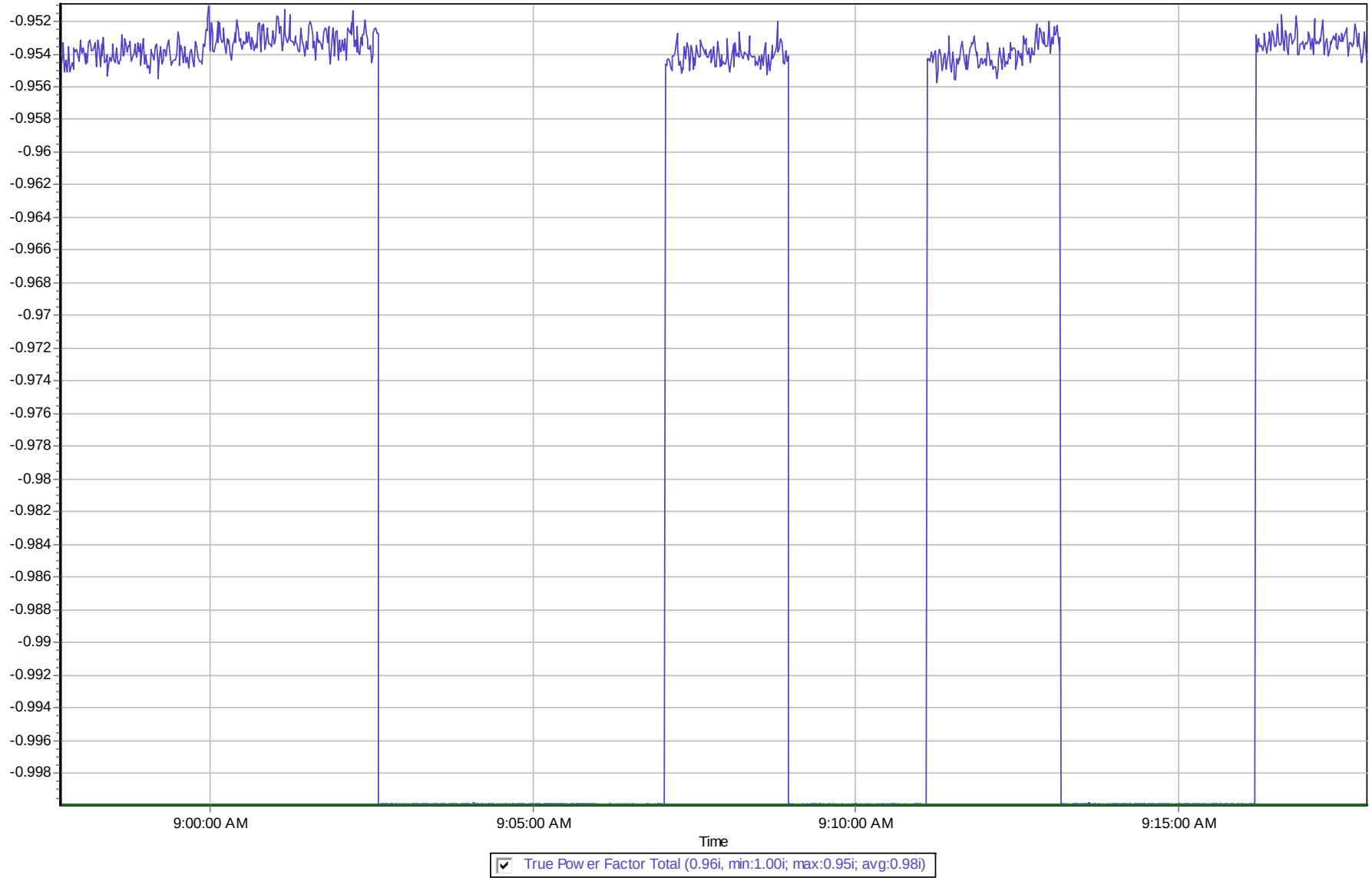

Hotel / Casino : Nevada, USA

3/18/2010 8:57:41 AM - 3/18/2010 9:17:56 AM

Hotel / Casino : Nevada, USA

3/18/2010 8:57:41 AM - 3/18/2010 9:17:56 AM

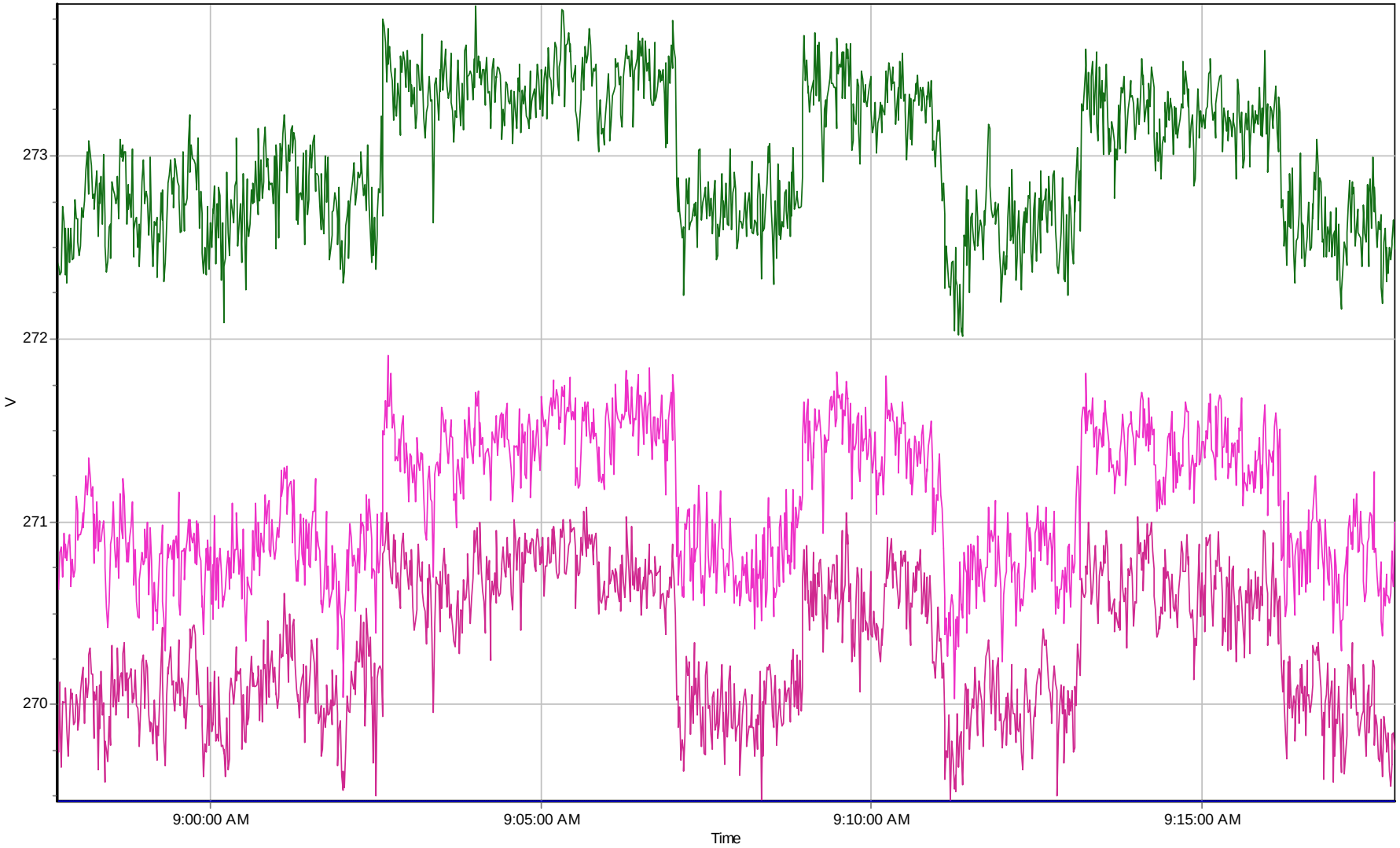

RMS Voltage Ø1 (273.02 V, min:272.01 V; max:273.83 V; avg:272.98 V)
RMS Voltage Ø2 (270.08 V, min:269.47 V; max:271.08 V; avg:270.32 V)
RMS Voltage Ø3 (270.92 V, min:270.03 V; max:271.91 V; avg:271.10 V)

An Introduction To the

USES® SHUNT EFFICIENCY SYSTEM

The patented **USES® Shunt Efficiency System** provides power conditioning and protection from potentially damaging power line surges and spikes. Additionally, the **USES® Shunt Efficiency System** can reduce the electrical energy costs associated with the operation of inductive loads — motor driven equipment and appliances and magnetically ballasted lighting systems.

USES® technology capabilities include:

- Protection from surges and spikes, including secondary lightning effects;
- Power conditioning, dynamic power factor correction, RF noise reduction, and reduction of the total current content including harmonic current; and
- Reduction of the electrical power drawn from the utility to operate inductive loads such as air conditioning and ventilation systems, pumps, compressors, & magnetically ballasted fluorescent & high pressure sodium lighting systems.

The benefits derived from **USES®** units include:

- Improved equipment reliability, including computer and electronic systems;
- Reduced life cycle maintenance, repair, and replacement costs; and
- An average return on investment is from 6 to 36 months.

The **USES®** approach is superior to other methods for improving electrical system performance, reliability, and efficiency from both an operational and cost standpoint. The technology's patent and listing by UL and CSA attest to the validity of **USES®** capabilities. The devices are maintenance-free, have a three year limited warranty, and have a projected life of 10 years. Models range from 120/240 volt residential units up to three-phrase 600 volt industrial units.

USES® works, it works very well, and it saves energy and money. The unique application of the wrap-around magnetic chokes enables wasted magnetic energy to be converted to useful energy, which is then supplied to the electrical system. This reduces the electrical power that the utility must provide resulting in lower electric bills. The units consistently provide real power (KW) savings when installed in systems with inductive loads. These savings exceed the KW reduction achieved merely from the reduction of I^2R losses. Specific savings are contingent on the electrical load configuration, equipment operating hours, and KWH cost. Additional savings can be realized from the reduction of demand charges and the reduction or elimination of power factor penalties. Units generally pay for themselves through utility cost savings in approximately 2 years.

© 2013 USES MFG INC. All Rights Reserved

USES MFG INC. PO Box 156 Old Colchester Road, Quaker Hill, Connecticut, USA 0637

Power Shaver®/USES® History

Certifications and Approvals:

1. Underwriters Laboratories [UL]:
   File Number: E132743
   Category: 5B81 Industrial Control Equipment
2. Canadian Standards Association [CSA]:
   Category: LR99910 / Master Contract: 234841
3. Patent Numbers:
   US: 5105327 – A.C. Power Conditioning Circuit
   US: (Pending) 20120194313 - A.C. Power Conditioning Circuit
   International: (Pending) WO2012102691 – AC Power Conditioning Circuit
4. General Services Administration [GSA]:
   GSA Contractor: Power Shaver
   GSA Contract Number: GS-07F-0422W
   Federal Supply Schedule 056: Buildings and Building Materials / Industrial Services
   FSC Group 61: Alternate Energy Solutions, Power Distribution Equipment
   SIN: 412-99: Introduction of New Services and Products related to Power Distribution Equip.
5. New York City Approval:
   Submission #: 92A0390
6. Funacion Institito de Ingenieria, Caracas, Venezuela:
   Electric and Electric System Engineering Center Test Report No, 24-000593

Partial Customer List:

1. Department of Homeland Security, March Air Reserve Base, CA
2. U.S. Postal Service Sacramento Main Office, Sacramento, CA
3. U.S. Federal Court House, Sacramento, CA
4. Daily Republic Newspaper, Fairfield, CA
5. Sacramento Container, Mather, CA
6. Citizens Hotel, Sacramento, CA
7. Jordan Winery, Healdsburg, CA
8. Withrow Dairy, Casa Grande, AZ
9. WCI Brokers, Business property advocates, Phoenix, AZ
10. Sierra Nevada Construction Inc., Sparks, NV

Exports:

1. Canada
2. Republic of South Korea
3. Commonwealth of the Bahamas
4. Republic of Venezuela
5. Mexico
6. Europe
7. United Kingdom
8. Marianas Islas
9. Africa
10. Philippines

©2013 USES MFG INC. All Rights Reserved
©2013 Power Shaver All Rights Reserved

Breakdown of Underwriters Laboratory's Characterization Of USES® Technology

1. Helps reduce wattage
2. Reduces current on line
3. Corrects power factor
4. Suppresses voltage surges and spikes
5. Improves voltage regulation
6. Helps to balance loads on all phases
7. Reduces current on the neutral
8. Reduces line-transmitted and motor/appliance-generated noise
9. Reduces total harmonic current contents
10. Reduces magnetic fields

News Release
FOR IMMEDIATE RELEASE

BUT HOW DOES IT WORK

"With two **USES**® units on line… we are now saving an average of 285 KWH per day, over 2000 KWH per week. I don't know what is in those boxes, but I am more than happy with the results."
-Dan Ruggles, Durgin and Crowell Lumber Co., Inc., New London, New Hampshire

What is in those boxes is **USES**® patented technology, consisting of parallel, wrap-around magnetic chokes oriented to couple magnetic forces generated across each electrical phase by the current. On the basis of the magnetic fields sensed, a signal is generated that enhances the AC wave form and matches it to the requirements of the inductive load. The peak portion of the current wave on the line side is decreased and electrical system inefficiencies originating in the supplying transformer are reduced. The complementary winding technique, used with chokes and capacitors, lowers kilowatt-hour [KWH] consumption, energy usage and demand rate, when connected to inductive loads.

USES® systems lessen electrical energy waste by: 1) matching voltage and current phases in inductive systems; 2) reducing harmonics, spikes and noise; 3) reducing I^2R losses; and 4) balancing loads across all phases. It has been found that the unique arrangement of chokes provides substantial reductions in power usage, particularly for inductive loads in industrial application. The immediate benefit is a verifiable reduction of electric utility bills. Additionally, equipment life is increased while maintenance and down time are reduced.

The benefits derived from **USES**® units include:

- Improved equipment reliability, including computer and electronic systems.
- Reduced life cycle maintenance, repair, and replacement costs.
- An average return on investment in 6 to 36 months.

The maintenance-free units are easily installed at service panels or distribution panels or they can be connected locally to equipment on the line side of any controllers, depending on the facility's equipment and electrical distribution system. Each unit comes with a three-year warranty covering the repair or replacement of the **USES**® unit. If the unit fails during use, USES MFG INC. will replace the unit at no charge.

Unlike the "black boxes" of the 1980s, **USES**® technology really works. The energy savings are proven by their many satisfied customers.

Current users of the **USES**® systems include:

U.S. Navy	Unilever
U.S. Marine Corps	Reebok International
U.S. Army Corps of Engineers	Nabisco
Washington National Airport	Cargill
Xerox Corp.	Sheraton Hotels Corp.
J.C. Penney	National Tire Corp.
St. Francis Hospital	Ethan Allen Furniture
Federal Die Casting Inc.	Marlin Firearms

USES® is a UL [Underwriters Laboratory] listed product, and is manufactured under a UL program that calls for unannounced inspections. The **USES**® system is made entirely out of UL approved, recognized, or listed components. **USES**® is also Canadian Standards Association [CSA] listed and approved. **USES**® products also are listed in the General Services Administration catalog.

For more information contact Power Shaver at 916-988-4087 or john@powershaver.com.

© 2013 USES MFG INC. All Rights Reserved

USES MFG INC. PO Box 156 Old Colchester Road, Quaker Hill, Connecticut, USA 06375

NEWS RELEASE
FOR IMMEDIATE RELEASE

NOT JUST A BIG FISH STORY

Cambridge, MD. — Between October of 1993 and July of 1994, the Coldwater Seafood Corporation of Cambridge, MD. Bought 11 **USES®** **Shunt Efficiency System** units and had them installed on the north end of their plant. After November 26, 1994, they wished they had installed the **USES®** system in the southern end of the plant as well.

On Saturday, November 26, 1994, something happened to the Coldwater plant. Sifting through the evidence, they believe there was a major voltage sag. Although the voltage sag lasted only a few seconds, it caused the plant considerable electrical damage, knocking out two of the three transformers that supplied electricity to the plant's south end freezers. The phase protection on that set of transformers, designed to protect against single-phasing, never tripped; it's magnetic coil melted. Two of the transformers were knocked out, after which, single-phasing did occur, causing the refrigeration units' motors to burn out. On that circuit, the coils on the 480 volt and 110 volt motor starter were cooked and the contacts were welded together. Consequently, the refrigeration units failed.

No damage was sustained in the north end of the plant, even though all of the transformers owned by Coldwater were wired in parallel, with the north end of the plant generally drawing 10 to 20 times the power used by the south end during a normal weekend. A conservative estimate of the damage that would have occurred in the north end was over six to eight million dollars, or roughly 200 times the total cost of the **USES®** units.

According to a news release prepared by Coldwater, "All these north end loads have been protected by **USES®** units which evidently do stabilize voltage as claimed. These units not only saved the motors from damage, preventing a loss of temperature in the freezers which contain 5 to 6 million pounds of fish, but they protected the transformers which are up line. The investment in the **USES®** units has certainly been repaid, particularly since they have also dropped the Kw demand in the north end by 40 to 50 Kw."

USES® units save money in a number of ways. According to E. Brian Wohlforth, **USES®** inventor, and many satisfied customer, the **USES®** system improves equipment reliability, including computer and electronic systems, reduce life-cycle maintenance, repair and replacement costs. In an average industrial setting, the **USES®** system generally provides an average return on investment in 6 to 36 months; in cases like the Coldwater plant, the system can pay for itself overnight.

For more information contact Power Shaver at 916-988-4087 or John@powershaver.com.

© 2013 USES MFG INC. All Rights Reserved

USES MFG INC. PO Box 156 Old Colchester Road, Quaker Hill, Connecticut, USA 06375

USES® Technology for Economical, Effective Energy Conservation

The rising costs of coal, oil and natural gas, the three primary fuels used in the production of electrical energy, have made the conservation of electricity a major concern. The extensive use of the basic fuels in the production of electrical power has made saving electricity synonymous with saving important non-renewable natural resources.

Most efforts to conserve electrical energy emphasize the more efficient use and effective management of available electrical energy – improved insulation and efficient lighting systems, staggered loading to minimize peak demand, or elimination of unnecessary use of electrical energy. However, problems arise because programs focused in these areas are not always sufficiently cost effective to merit implementation or are too dependent on public cooperation. **USES®** technology provides highly cost-effective solutions which help prevent electrical waste.

USES® technology works on inductive loads to improve the efficiency of the electrical system. Virtually any setting can accommodated – industrial sites, commercial buildings, hospitals, stores, supermarkets, apartment buildings, or private dwellings. Rather than lower the demand of the system, the **USES®** system raises the percentage of billed energy that is readily usable. By maximizing the amount of billed energy that is usable, **USES®** reduces the energy required to do the same amount of work.

USES® focuses on providing more efficient and effective use of electrical power. Not all energy supplied and billed to the customer is used or usable, even in the most efficient systems. The raw, or "dirty" power supplied by the power plant contain surges, spikes, harmonics, line noise and other natural electrical phenomena which are not only unusable, but in many cases are harmful to equipment. The **USES®** units work as a power conditioner and a filter to "clean" the energy before it enters the system.

The **USES®** units enhance the AC wave form, matching it to the requirements of the inductive load. The peak portion of the current wave on the line side is decreased and electrical inefficiencies that originate in the supplying transformer are reduced. This, combined with **USES®** power factor correction capabilities, reduces wasted electricity, maximizing the amount of usable billed energy. Effectively, **USES®** provides more electricity per capital dollar.

USES® units provide a number of other benefits, including surge and spike protection and the reduction of harmful magnetic fields. Spikes, surges, and magnetic fields are naturally produced by electrical energy. Using electrical equipment causes these electrical anomalies to occur more frequently, exacerbating the situation. **USES®** units are designed to absorb and attenuate major transients before damage is done. The units respond to spikes and surges in less than 5 nanoseconds. This feature extends the life of the equipment as well as reduces the power required.

USES® technology reduces electrical waste, conserves valuable natural resources, and saves money, generally paying for itself in electrical saving and reduced maintenance costs in 1-3 years. With dwindling resources and the eventuality of stricter environmental and conservation policies, **USES®** is the environmentally and economically responsible choice.

©2013 USES MFG INC. All Rights Reserved

USES MFG INC. PO Box 156, 398 Butlertown Road, Oakdale, Connecticut, USA 06370

POWER
SHAVER
Energy Saving Systems
commercial
& residential
efficiency
systems
The Electrical Watch Dog
USES
The New XL Power Conditioning System
SHUNT EFFICIENCY SYSTEM
A.C. POWER CONDITIONER
POWER SHAVER
GREEN SOLUTIONS SYSTEMS

THE NEW USES XL TECHNICAL SPECIFICATIONS

Model	XL-R	XL-1	XL-3D 208	XL-3Y 208	XL- 3D 240/250	XL- 3Y 240/250	XL-3D 480	XL-3Y 480	XL-3D 600	XL-3Y 600
Line Voltage	120/240 VAC	120/240 VAC	208 VAC	120/208 VAC	240/250 VAC	120/240/250 VAC	480 VAC	277/480 VAC	600 VAC	347/600 VAC
Nominal Frequency	50/60 HZ									
Power Dissipation per 10X1000 µsec.	>1,000	>1,100	>2,400	>2,400	>1,400	>1,400	>3,000	>4,500	>3,300	>6,000
Peak Pulse Current	>100,000	>100,000	>100,000	>200,000	>100,000	>200,000	100,000	200,000	100,000	200,000
Max Surge Current per 8x20 µsec.	40,000	40,000	40,000	40,000	40,000	40,000	40,000	40,000	40,000	40,000
Nominal Clamping Voltage VRMS	130V/250V	130V/250V	130V/250V	130V/250V	240/250V	120/250V	580V	320V/ 580V	680V	460V/ 680V
Maximum Clamping Voltage	224V/432V	224V/432V	432V	224V/432V	553V	224V/553V	1,000V	533V/ 1,000V	1175V	795V/ 1175V
Response Time	< 15 NANO SECONDS									
Surge Rebound	INHERENT SELF HEALING PROPERTIES									
Standby Power	>8 WATTS	>10 WATTS	>15 WATTS	>15 WATTS	>19 WATTS	> 17 WATTS	>20WATTS	>20WATTS	>30WATTS	>30WATTS
Total Capacitance	>130 UF	>200 UF	> 450 UF	> 450 UF	> 450UF	> 450UF	>300UF	>300UF	>300UF	>300UF
Operating Temperature	-40°C TO 70°C									
Unit Temperature Rise	< 2°C after 24 hours under full load conditions									
Audible Noise at 3'	< 2dBA									
Operating Life	150,000 hours with over 95% survival									
Line Connections (THHN single cond.)	#10	#10	#6	#6	#6	#6	#4	#4	#2	#2
Circuit Breaker Required	30A, 2 POLE	30A, 2 POLE	50A, 3 POLE	50A, 3 POLE	50A, 3 POLE	50A, 3 POLE	70A, 3 pole	70A, 3 pole	90A, 3 pole	90A, 3 pole
Dimensions (HxWxD)	8"x 6"X 5"	10"x 6"x 5"	14"x 12"x 6"	14"x 12"x 6"	14"x 12"x 6"	14"x 12"x 6"	14"x12"x 6"	14"x12"x 6"	14"x12"x 6"	14"x12"x 6"
Estimated Weight	8 LBS	12 LBS	18 LBS	18 LBS	18 LBS	18 LBS	24 LBS	24 LBS	28 LBS	28 LBS
RF Filter	3	6	9	9	9	9	9	9	9	9
ISO Transformer	1	2	3	3	3	3	3	3	3	3
Step up Transformer	1	2	3	3	3	3	3	3	3	3
KW Reduction Value	.75-1.0 kW kWh/hr	1.2-1.7 kW kWh/hr	3.0-4.0 kW kWh/hr	1.7-2.5 kW kWh/hr	3.5-4.5 kW kWh/hr	3.0-4.0 kW kWh/hr	4.5-6.0 kW kWh/hr	3.5-4.5 kW kWh/hr	6.0-7.0 kW kWh/hr	4.5-6.0 kW kWh/hr
Warranty	3 Years									

REV; 07/16/12

A "SHORT LIST" OF OUR CUSTOMERS INCLUDES:

ABITIBI-PRICE

AMERCIAN CYANAMID

AMTECH EAST, INC.

ASSOCIATED MARKETS

AVERY ABRASIVES INC.

BRISTOL MYERS

BURNDY CORPORATION

CHAPIN AND BANGS COMPANY

CHEMICAL BANK

ETHAN ALLEN

FOOD LION

FRIONOR USA INC.

GENERAL ELECTRIC

GORDON MFG.

HOYT CORPORATION

H.P. HOOD

ICELANDIC

J.C. PENNY

KING CULLEN GROCERY

LEVER BROTHERS

MARLIN FIREARMS

TOWN OF MONROE

NABISCO

NATIONAL TIRE & WHOLESALE

NEWPORT CREAMERY

NUTRENA FEEDS

OTTOWA UNIVERSITY

PEPSI

PLASPRO

PURINA MILLS

RAND McNALLY

REEBOK INTERNATIONAL

REFLECK

SAINT FRANCIS HOSPITAL

STAR MARKETS

TOWN OF SALEM

THE STATE OF CONNECTICUT

THE WHITE HOUSE

UNILEVER

U.S. ARMY CORPS OF ENGINEERS

U.S. MARINE CORPS

WASHINGTON NATIONAL AIRPORT

UNITED STATES POSTAL SERVICE

***Also listed in General Services Administration Catalog**

Copyright 2013 USES MFG INC. All Rights Reserved

USES MFG INC. PO Box 156, 398 Butlertown Road, Oakdale, Connecticut, USA 06370

US 20120194313A1

(19) United States

(12) Patent Application Publication

Wohlforth

(10) Pub. No.: US 2012/0194313 A1

(43) Pub. Date: Aug. 2, 2012

(54) AC POWER CONDITIONING CIRCUIT

(75) Inventor: E. Brian Wohlforth, Quaker Hill, CT (US)

(73) Assignee: USES, INC., Quaker Hill, CT (US)

(21) Appl. No.: 13/015,694

(22) Filed: Jan. 28, 2011

Publication Classification

(51) Int. Cl.
H01F 27/28 (2006.01)

(52) U.S. Cl. 336/170

(57) ABSTRACT

A multi-coil choke for an AC power conditioner includes a magnetic core having first, second and third parallel legs. A first coil wrapped around the first leg terminates in first and second leads at respective ends. A second coil wrapped around the second leg terminates in first and second leads at respective ends. A third coil wrapped around the third leg terminates in first and second leads at respective ends. A fourth coil is formed from a proximal portion of the second lead of said first coil. The fourth coil is wrapped around a distal portion of the second lead of the third coil. A fifth coil is formed from a proximal portion of the second lead of the third coil. The fifth coil is wrapped around a distal portion of the second lead of the first coil. AC power conditioners using one or more such chokes are also disclosed.

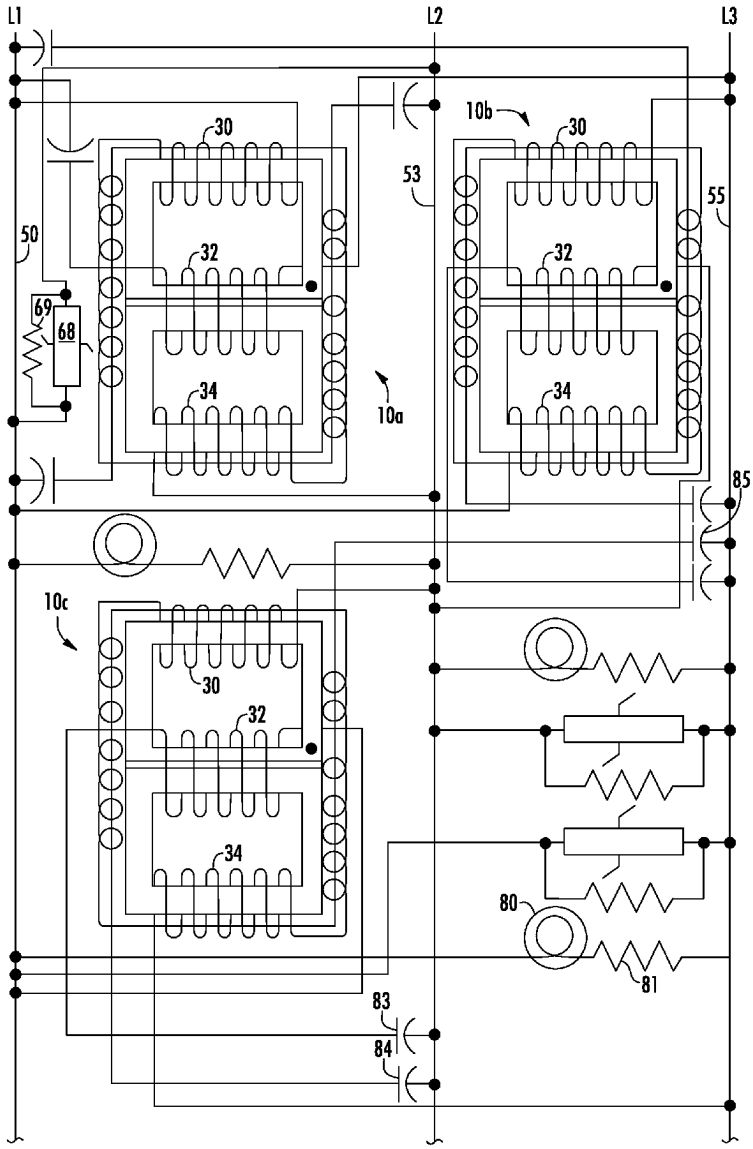

Faraday's Law

(Georgia State University)

Any change in the magnetic environment of a coil of wire will cause a voltage (emf) to be "induced" in the coil. No matter how the change is produced, the voltage will be generated. The change could be produced by changing the magnetic field strength, moving a magnet toward or away from the coil, moving the coil into or out of the magnetic field, rotating the coil relative to the magnet, etc.

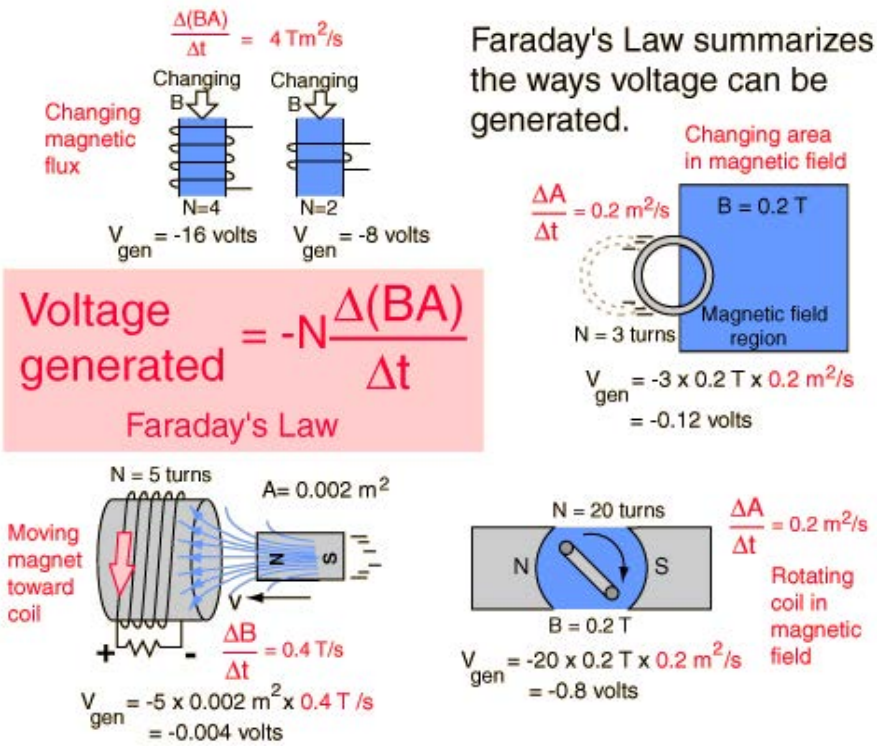

Faraday's law is a fundamental relationship which comes from Maxwell's equations. It serves as a succinct summary of the ways a voltage (or emf) may be generated by a changing magnetic environment. The induced emf in a coil is equal to the negative of the rate of change of magnetic flux times the number of turns in the coil. It involves the interaction of charge with magnetic field.

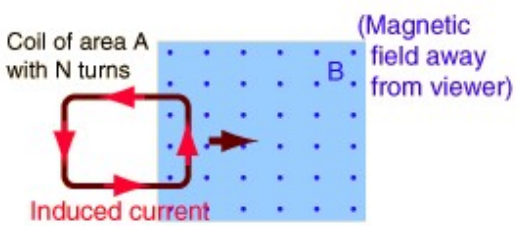

A coil of wire moving into a magnetic field is one example of an emf generated according to Faraday's Law. The current induced will create a magnetic field which opposes the buildup of magnetic field in the coil.

Faraday's Law

$$\text{Emf} = -N\frac{\Delta\Phi}{\Delta t}$$

Lenz's Law

where N = number of turns
Φ = BA = magnetic flux
B = external magnetic field
A = area of coil

The minus sign denotes Lenz's Law. Emf is the term for generated or induced voltage.

Lenz's Law

When an emf is generated by a change in magnetic flux according to Faraday's Law, the polarity of the induced emf is such that it produces a current whose magnetic field opposes the change which produces it. The induced magnetic field inside any loop of wire always acts to keep the magnetic flux in the loop constant. In the examples below, if the B field is increasing, the induced field acts in opposition to it. If it is decreasing, the induced field acts in the direction of the applied field to try to keep it constant.

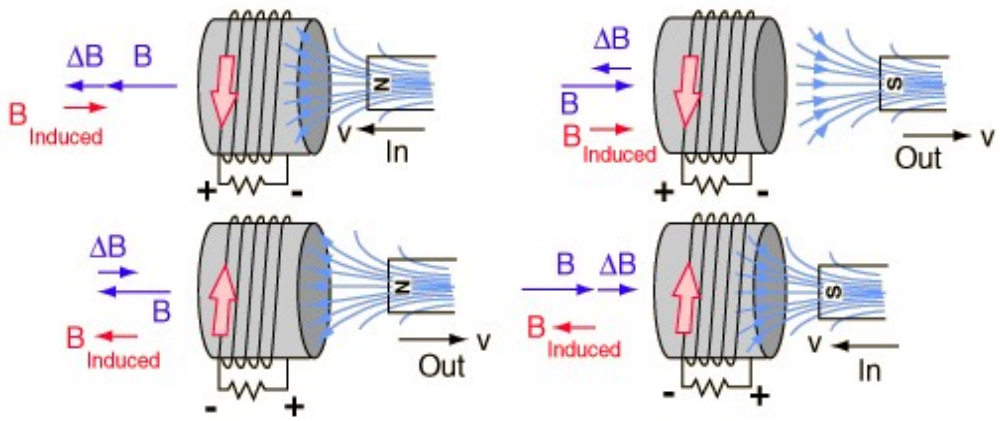

Magnet and Coil

When a magnet is moved into a coil of wire, changing the magnetic field and magnetic flux through the coil, a voltage will be generated in the coil according to Faraday's Law. In the example shown below, when the magnet is moved into the coil the galvanometer deflects to the left in response to the increasing field. When the magnet is pulled back out, the galvanometer deflects to the right in response to the decreasing field. The polarity of the induced emf is such that it produces a current whose magnetic field opposes the change that produces it. The induced magnetic field inside any loop of wire always acts to keep the magnetic flux in the loop constant. This inherent behavior of generated magnetic fields is summarized in Lenz's Law.

VP Engineering
USES INC
9 MAPLE AVE EXT
PO BOX 156
QUAKER HILL CT 06375

Date:	2012/06/14
Subscriber:	597368001
PartySite:	122036
File No:	E132743
Project No:	12SR8736892
PD No:	12023121
Type:	R
PO Number:	

Subject: **Procedure And/Or Report Material**

The following material resulting from the investigation under the above numbers is enclosed.

Issue Date	Vol	Sec	Pages	Revised Date
	1		Revised Index Page(s) 1	2012/06/14
2012/03/01	1	2	New Description Page(s) 7A,8A,10	2012/06/14
2012/03/01	1	2	Revised Description Page(s) 1,2,5,6,7,8,9	2012/06/14
2012/03/01	1	2	New Test Record 2	2012/06/14

Inspections at your plant will be conducted under the supervision of VINCENT RUSSO, AREA MANAGER, UL INSPECTION CENTER NEW YORK, UL LLC, 1285 WALT WHITMAN RD, MELVILLE, NY, United States, 11747., PHONE: 631-546-2333, FAX: 631-439-6050, EMAIL: VINCENT.J.RUSSO@US.UL.COM

Please file revised pages and illustrations in place of material of like identity. New material should be filed in its proper numerical order.

NOTE: Follow-Up Service Procedure revisions DO NOT include Cover Pages, Test Records and Conclusion Pages. Report revisions DO NOT include Authorization Pages, Indices, Section General Pages and Appendixes.

Please review this material and report any inaccuracies to UL's Customer Service Professionals. Contact information for all of UL's global offices can be found at http://www.ul.com/global/eng/pages/corporate/contactus.

If you'd like to receive updated materials FASTER, UL offers electronic access and/or delivery of this material. For more details, contact UL's Customer Service Professionals as shown above.

This material is provided on behalf of UL LLC(UL) or any authorized licensee of UL.

MEL File

UL INSPECTION CENTER 36

I N D E X

Type	Section	Report Date	Certification
RDES-1, CMES-1, CMES-3Y, CMES-3Y480, CMES-3D, CMES-3D480, BL-120, BL-208/240, BL-300, BLM-3Y, BLM-3Y480, BLM-3D, BLM-3D480, CABO-120, CABO-240R, EBB-3D and EBB-3Y	1	1991-01-03	US
USL, CNL - Power Factor Correction units, XL Series Models XL-R, XL-1, XL-3Y 208, XL-3D 208, XL-3Y 240, XL-3D 240, XL-3Y 480, XL-3D 480, XL-3Y 600 and XL-3D 600. USL, CNL - Power Factor Correction units, XLU Series Models XLU-R, XLU-1, XLU-3Y 208, XLU-3D 208, XLU-3Y 240, XLU-3D 240, XLU-3Y 480, XLU-3D 480, XLU-3Y 600 and XLU-3D 600	2	2012-03-01	US,CN

1285 Walt Whitman Road
Melville, New York 11747-3061
(516) 271-6200
Fax No. (516)271-6259/6260
MCI Mail No. 255-3315
Telex No. 6852015

Underwriters Laboratories Inc.

USES, INC.
152 Old Colchester Rd.
P.O. Box 156
Quaker Hill, CT 06375

Date: March 9, 1992
File No.: E132743

Product: MISCELLANEOUS APPARATUS

The following material resulting from the investigation under the above numbers is enclosed:

Issue Date	Vol.	Sec.	Pages	Revised Date
1/ 3/91	1	001 Revised		3/ 9/92
1/ 3/91	1	001 Revised		3/ 9/92
1/ 3/91	1	001 New		3/ 9/92

Please file revised pages and illustrations in place of material of like identity. New material should be filed in its proper numerical order.

NOTE: Follow-Up Service Procedure revisions DO NOT include Cover Pages, Test Records and Conclusion Pages. Report revisions DO NOT include Authorization Pages, Indices, Section General Pages and Appendixes.

cc:
Melville File

UNDERWRITERS LABORATORIES INC.
UL INSPECTION CENTER HARTFORD
UNIT 6
BLDG B
200 W. CENTER ST.
CHESTER CT 06040

- Contact: MR. ROBERT McCARTHY

An independent
not-for-profit organization

DESCRIPTION

PRODUCT COVERED:

Miscellaneous Apparatus, Power factor correction unit with surge suppression, Model Nos. RDES-1, CMES-1, CMES-3Y, CMES-3Y480, CMES-3D, CMES-3D480, BL-120, BL-208/240, BL-300, BLM-3Y, BLM-3Y480, BLM-3D, BLM-3D480, CABO-120, CABO-240R, EBB-3D and EBB-3Y.

GENERAL:

These devices are closed type power factor correction units with surge suppression. They use a polymeric enclosure. They function as a solid state surge and spike suppressers for voltage. They are intended to limit the max amplitude of voltage spikes and surges on power lines to specified values. The devices intend to reduce line transmitted interference or noise generated by motors or appliances. They improve voltage regulation. They reduce magnetic fields through wire and equipment from the point of connection of the Unit back to the source by reducing current. When these devices are connected to inductive loads, connected on each hot leg they intend to balance the current on each of these legs and lower the current on the neutral. Also by increasing power factor and lowering amperage, they are able to increase the capacity of the service equipment and help to reduce the wattage when connected on an inductive load. The unit also helps to reduce harmonic current and wattage contents of the line. They are intended to be installed on the load side of the main disconnect.

ELECTRICAL RATINGS:

30 A continuous, 480 V AC, 3 phase maximum.
30 A continuous, 277 V ac, 1 phase maximum

Environmental rating, Type 1.

M.G.
M.S.

The Theory of USES Operation

USES® reduces power in at least three different ways:

1. **USES®** creates a leading power factor of at least 50% leading which reduces the inductive vars on the system by up to 40 kVar per unit depending on the phase and voltage (600 volts 3 phase 60 hertz). The resultant reduction in the line current means lower conductor and transformer losses. This could mean a 1% to 2% improvement in losses.

2. As a voltage regulator, it stabilizes and regulates the inter-phase voltages to the load from the voltage supply.

3. By far the greatest savings by the **USES®** devise is the ability to develop a negative current from the adjacent phases (such as phase B-C and C-A into phase B). This current is inserted into each phase by means of inducing currents through magnetic coupling of the other phases. Devices as a choke coil, or current transformer or reactor are used and by wrapping the coils in such a way so as to produce a negative current with a relatively large 120 cycle content.

The net result is a reduction in power consumption of to (10) to fifteen (15) percent depending on circuit parameters.

These units also act as a surge and transient suppresser as well as a supplemental source of power for a few cycles, (UPS).

As an example, examine figure 5 of the patent application. Capacitor no. 240 and varistor 242 are meant as an RC network to act as a filter for harmonics and surges. Usually there is also a surge arrester.

Capacitor 224 and 238 are in the circuit to provide a leading power factor. L1 and L2 are magnetically coupled through choke coils 214, 230, 218, 234.

This negative current is achieved in the winding direction of the choke coils and reactors. Let us assume we are looking at phase B. When phase C and phase A are magnetically induced in phase B, they are subjected to a 180 degrees phase shift as they pass through the choke coils. The wave form in phase B would have the basic sine wave form with a leading power factor plus two negative wave forms from phase C (leading) and phase A (lagging). The resultant wave form would be basic sine wave, less a 120 degree cycle clipping, will appear identically in all three phases, thus the overall current will appear as a 60 cycle wave form with a 120 degree cycle current superimposed. Since this current is negative it will be 180 degree out of sync with the main phase current.

This will have the net result of reducing the current from the source and since it is a leading current, will reduce the inductive vars in the circuit.

On the main feeder current the effect can be observed with an oscilloscope, when comparing the before and after **USES®** application, by a reduced cresting factor of the wave form. Thus the treated wave form has a lowered peak and appears more square. This reduced RMS current results in a perceived lower I2R load value to the source. Thus a 5% "in phase" current reduction will result in a 10% power reduction.

There are several key peculiarities to these **USES®** devices. Some are as follows:

a. A static current source-converting magnetic field to electrical energy.

b. Producing a negative current which does not contribute to improving load side consumption of energy but reduces the upstream effect. As an example, let us take a 100 amp load with a **USES®** devise upstream. Whether the USES® device is on or off this load will basically be the same except for minor variances caused by a slight stabilization of phase voltages.

However the current flow back to the source will be reduced by the current from the **USES®** device. This agrees with Kirchoff's law, that the algebraic sum of all current at a point equals zero.

In other words the current from the **USES®** devise does not flow to the load, but up the line towards the source.

Ohm's Law if fulfilled by E = IR or E – E back-voltage = IR

There has been one theory put forth that most of the savings are due to motor circulating currents caused by phase imbalances. If this were true, then motor currents would be drastically reduced with the application of the **USES®** units, which normally it is not. However, if the total power savings are much greater than the watts produced by 50% of the **USES®** current (50% leading power factor), then one would find that some of the surplus saving would come from the correctional voltage imbalance.

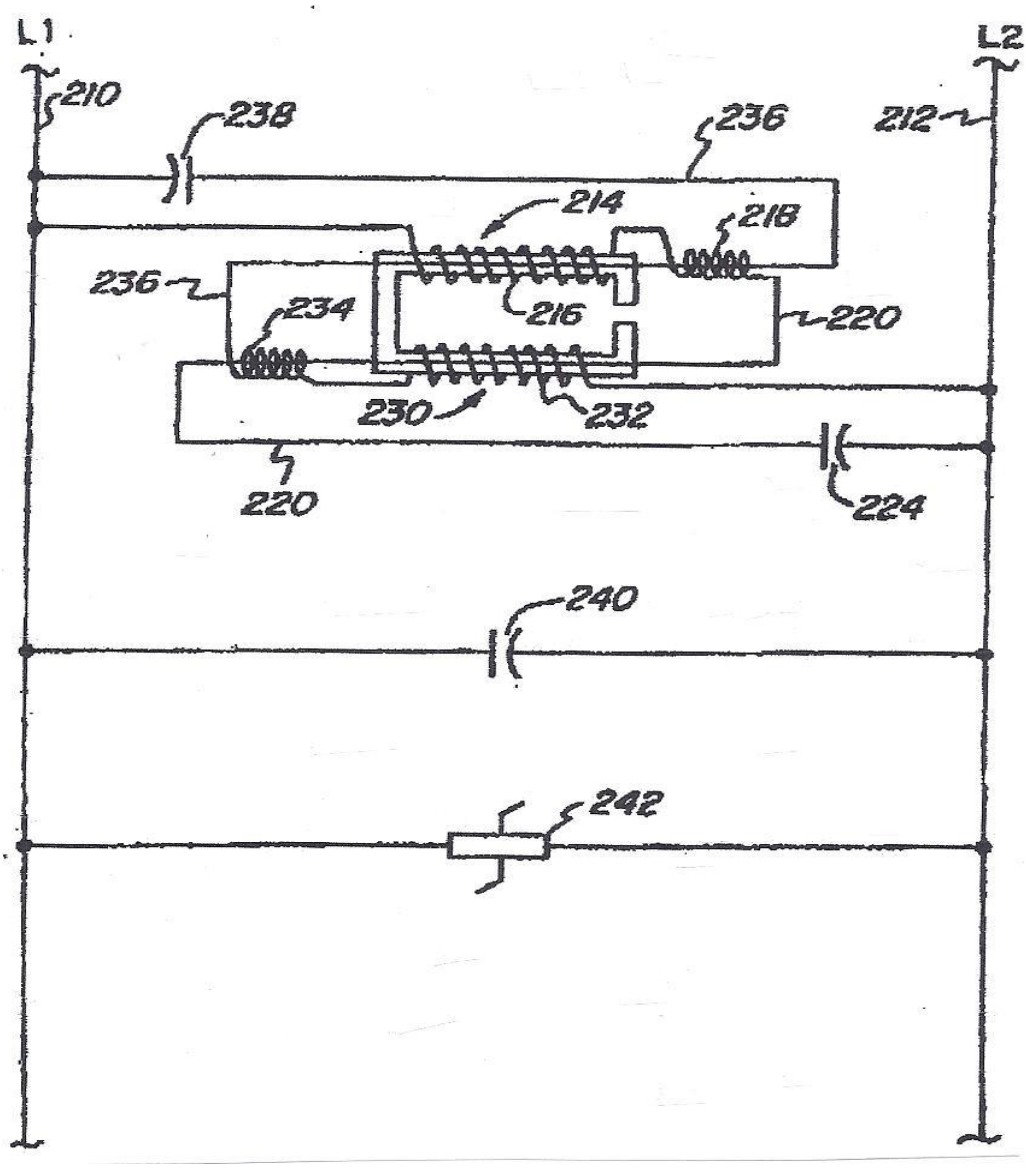
L1
L2
210
238
236
212
214
218
236
234
216
220
230
232
220
224
240
242

FIG. 5

CSA Group

Certificate of Compliance

Certificate: 1988168 **Master Contract:** 234841

Project: 2516182 **Date Issued:** June 20, 2012

Issued to: **USES MFG INC.**

152 Old Colchester Rd
Quaker Hill, CT 06375
USA
Attention: Mr. Brian Wohlforth

The products listed below are eligible to bear the CSA Mark shown with adjacent indicators 'C' and 'US' for Canada and US or with adjacent indicator 'US' for US only or without either indicator for Canada only.

C US

Omar Elouadrhiri Eng

Issued by: Omar Elouadrhiri Eng

PRODUCTS

CLASS 9071 01 - CAPACITORS - For Power Factor Correction
CLASS 9071 81 - CAPACITORS - For Power Factor Correction - Certified to US Standards

Power Factor Capacitor Controllers, Models RDES-1, CMES-1, CMES-3Y, CMES-3D, CMES-3Y 480, CMES-3Y 600, CMES-3D 600, CMES-3D 480, BL 120, BL 208/240, BL 300, BLM-3Y, BLM-3Y 480, BLM-3D, BLM-3D 480, CABO-120, CABO-240R, EBB-3D, EBB-3Y, RDES-380, CMES-3Y 380, XL-R, XL-1, XL-3Y 208, XL-3D 208, XL-3Y 240-250, XL-3D 240-250, XL-3Y 480, XL-3D 480, XL-3Y 600, XL-3D 600, XL-R 400, XL-1 400, XL-3Y 400, XL-3D 400, XLU-R, XLU-1, XLU-3Y 208, XLU-3D 208, XLU-3Y 240-250, XLU-3D 240-250, XLU-3Y 240-250 H, XLU-3Y 480, XLU-3D 480, XLU-3Y 600, XLU-3D 600, XLU-R 400, XLU-1 400, XLU-3Y 400, XLU-3D 400. Rated 48kVar max, 600V ac max, 54A max, continuous, 50/60Hz, 1 or 3 phases, enclosed, permanently connected.

Notes:

The unit is Certified as end-of-the-line device.

APPLICABLE REQUIREMENTS

CSA Std C22.2 No.190-M1985 - Capacitors for Power Factor Correction

Certificate:	1988168	**Master Contract:**	234841
Project:	2516182	**Date Issued:**	June 20, 2012

UL Std No. 810 - Capacitors

CSA Group

Descriptive Report and Test Results

MASTER CONTRACT: 234841
REPORT: 1988168
PROJECT: 2516182

Edition 1: June 11, 2008; Project 1988168 – Montreal
Issued by Patrick Quinty, Eng.; Reviewed by Jean-Pierre Boivin, Eng.

Edition 2: June 20, 2012; Project 2516182 – Montréal
Issued by Omar Elouadrhiri, Eng.; Reviewed by Jean-Pierre Boivin, Eng.

Report pages reissued
Figure added pages 4-11
Illustration added pages 43-143

Report pages reissued

Contents:
Certificate of Compliance - Pages 1-2
Supplement to Certificate of Compliance – Page 1
Description and Tests - Pages 1 to 9
Att1 Figures – 1 to 11
Att2 Illustrations – 1 to 143.
Att3 Appendix A – UL Report E132743 (CSA Principal File only) Page 1 to 60
Appendix T – (Test results attached to CSA International Principal file only)

PRODUCTS

CLASS 9071 01 - CAPACITORS - For Power Factor Correction
CLASS 9071 81 - CAPACITORS - For Power Factor Correction – Certified to US Standards

Part I:
Power Factor Capacitor Controllers, Models RDES-1, CMES-1, CMES-3Y, CMES-3D, CMES-3Y480, CMES-3Y600, CMES-3D600, CMES-3D480, BL120, BL208/240, BL300, BLM-3Y, BLM-3Y480, BLM-3D, BLM-3D480, CABO-120, CABO-240R, EBB-3D, EBB-3Y, RDES-1380 and CMES-3Y380, XL-R, XL-l, XL-3Y 208, XL-3D 208, XL-3Y 240-250, XL-3D 240-250, XL-3Y 480, XL-3D 480, XL-3Y 600, XL-3D 600, XL-R 400, XL-1 400, XL-3Y 400, XL-3D 400, XLU-R, XLU-1, XLU-3Y 208, XLU-3D 208, XLU-3Y 240-250, XLU-3D 240-250, XLU-3Y 240-250 H, XLU-3Y 480, XLU-3D 480, XLU-3Y 600, XLU-3D 600, XLU-R 400, XLU-1 400, XLU-3Y 400, XLU-3D 400. Rated 48kVar max, 600V ac max, 54A max, continuous, 50/60Hz, 1 or 3 phases, Enclosed, permanently connected.

Note:

1. Assembly are certified as end-of-the-line device.

This report shall not be reproduced, except in full, without the approval of CSA Group.

865 Ellingham Street, Pointe-Claire, Quebec, Canada H9R 5E8
Telephone: 514.694.8110 1.800.463.6727 Fax: 514.694.5001 www.csagroup.org

Montréal ▪ Toronto ▪ Edmonton ▪ Vancouver ▪ Tokyo ▪ Hong Kong

USES MFG INC.
P.O. BOX 156
152 Old Colchester Road
Quaker Hill, CT USA 06375
Att. Mr. Bill Morton

Ref. LR 99910-7
January 16 1997

Subject: Witnessing of field measurements with CSA certified Power Factor Correction Capacitors Cat. No. CMES-3D.

Dear Bill,

This letter will serve as our report on the subject matter that took place on April 2 1996 at Abitibi Price Inc. Sheridan Park.

SCOPE

This exercise is to measure voltage, ampere, power factor and kilowatt in an electrical distribution system with and without using USES CMES-3D power factor correction capacitors. The unit is designed for three phase 347/600V applications and is generally installed using a 400A breaker on an distribution panel or with an 40A disconnect. The USES CMES-3D 600V is designed to be installed on inductive loads.

ELECTRICAL LOADS

On the second floor of the Sheridan Park Technology Centre was the ventilation system. In this system, there were several inductive motor loads rating between 50 horsepower to 5 horsepower, refer to Ill. 1. All loads were controlled from the MCC Control Cabinet in the second floor. This is where the USES CMES-3D 600V model was installed.

METERING USED

Two Tif instrument (Tif KW220-3AV)s were used to do the evaluation on USES CMES-3D 600V model. The first Tif was installed at the first floor electrical room next to the utility meter to evaluate savings. The second Tif was used at the load to evaluate if any changes were seen.

Two Amprobe (ACD-2000)s were used at the same locations to evaluate true RMS-Amperage readings.

Two Amprobe (7A)s were used at the same locations to evaluate the average amperage.

Canadian Standards Association, 178 Rexdale Boulevard, Etobicoke, Ontario, Canada M9W 1R3
Telephone: (416) 747-4000 Telefax: (416) 747-4149

METERING USED cont'd

Two Protec (504)s were used at the same locations to evaluate the voltage.

Two Tif instrument (2300)s were used at the same locations to evaluate the power factor.

Also readings were taken from the utility supplied Digital Meter (Schlumberger VIP 2.5 ELX).

Readings were taken instantaneously when USES was energized and de-energized, meter was reset on each procedure.

Manufacturer provided the following illustrative material

1. Equipment floor plan	Ill. 1
2. Readings measured	Ill. 2 to 7
3. Data graphs	Ill. 8 to 12
4. Conclusion	Ill. 13

All the above information are on file in the Engineering department at CSA in Etobicoke, Ontario and are to be used for future reference.

With the completion of the above tests, this completes the scope of work originally contemplated for this project. The file No.LR 99910-7 has been closed and you will receive, in due course, a statement of your account as it concerns this application.

Yours truly,

Charles Law P. Eng.
Motors, Controls and Switchgear Group
Tel: 416-747-4148
Fax: 416-747-4178

Sheridan Park Technology Center.

FIRST FLOOR

Electrical Distribution Room
Located on the first floor.

LR99910-7

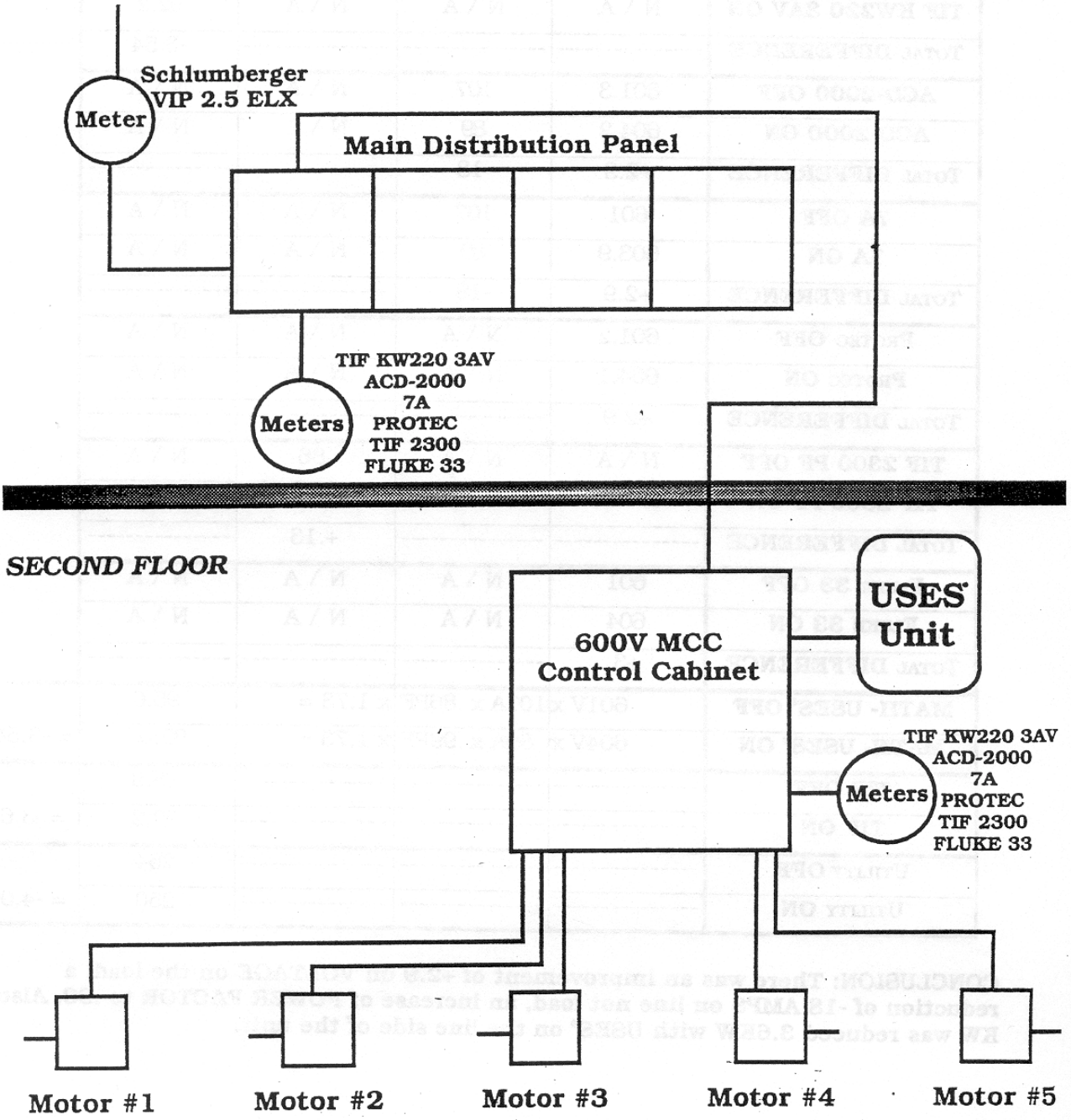

TABLE #1 INSTANTANEOUS TEST 1	VOLTAGE	AMPERAGE	POWER FACTOR	KW	
UTILITY METER OFF	N \ A	N \ A	N \ A	254	
UTILITY METER ON	N \ A	N \ A	N \ A	250	
TOTAL DIFFERENCE	----------	----------	----------	-4	
TIF KW220 3AV OFF	N \ A	N \ A	N \ A	95.8	
TIF KW220 3AV ON	N \ A	N \ A	N \ A	92.2	
TOTAL DIFFERENCE	----------	----------	----------	-3.54	
ACD-2000 OFF	601.3	107	N \ A	N \ A	
ACD-2000 ON	604.2	89	N \ A	N \ A	
TOTAL DIFFERENCE	+2.9	-18	----------	----------	
7A OFF	601	107	N \ A	N \ A	
7A ON	603.9	89	N \ A	N \ A	
TOTAL DIFFERENCE	+2.9	-18	----------	----------	
PROTEC OFF	601.2	N \ A	N \ A	N \ A	
PROTEC ON	604.1	N \ A	N \ A	N \ A	
TOTAL DIFFERENCE	+2.9	----------	----------	----------	
TIF 2300 PF OFF	N \ A	N \ A	.86	N \ A	
TIF 2300 PF ON	N \ A	N \ A	.99	N \ A	
TOTAL DIFFERENCE	----------	----------	+.13	----------	
FLUKE 33 OFF	601	N \ A	N \ A	N \ A	
FLUKE 33 ON	604	N \ A	N \ A	N \ A	
TOTAL DIFFERENCE	+3	----------	----------	----------	
MATH- USES® OFF	601V x	107A x .86PF	x 1.73 =	95.6	
MATH- USES® ON	604V x	89A x .99PF	x 1.73 =	92.06	= -3.54
TIF OFF	----------	----------	----------	95.8	
TIF ON	----------	----------	----------	92.2	= -3.6
UTILITY OFF	----------	----------	----------	254	
UTILITY ON	----------	----------	----------	250	= -4.0

CONCLUSION: There was an improvement of +2.9 on VOLTAGE on the load, a reduction of -18 AMPS on line not load, an increase of POWER FACTOR to .99. Also, KW was reduced 3.6KW with USES® on the line side of the unit.

Graph #1

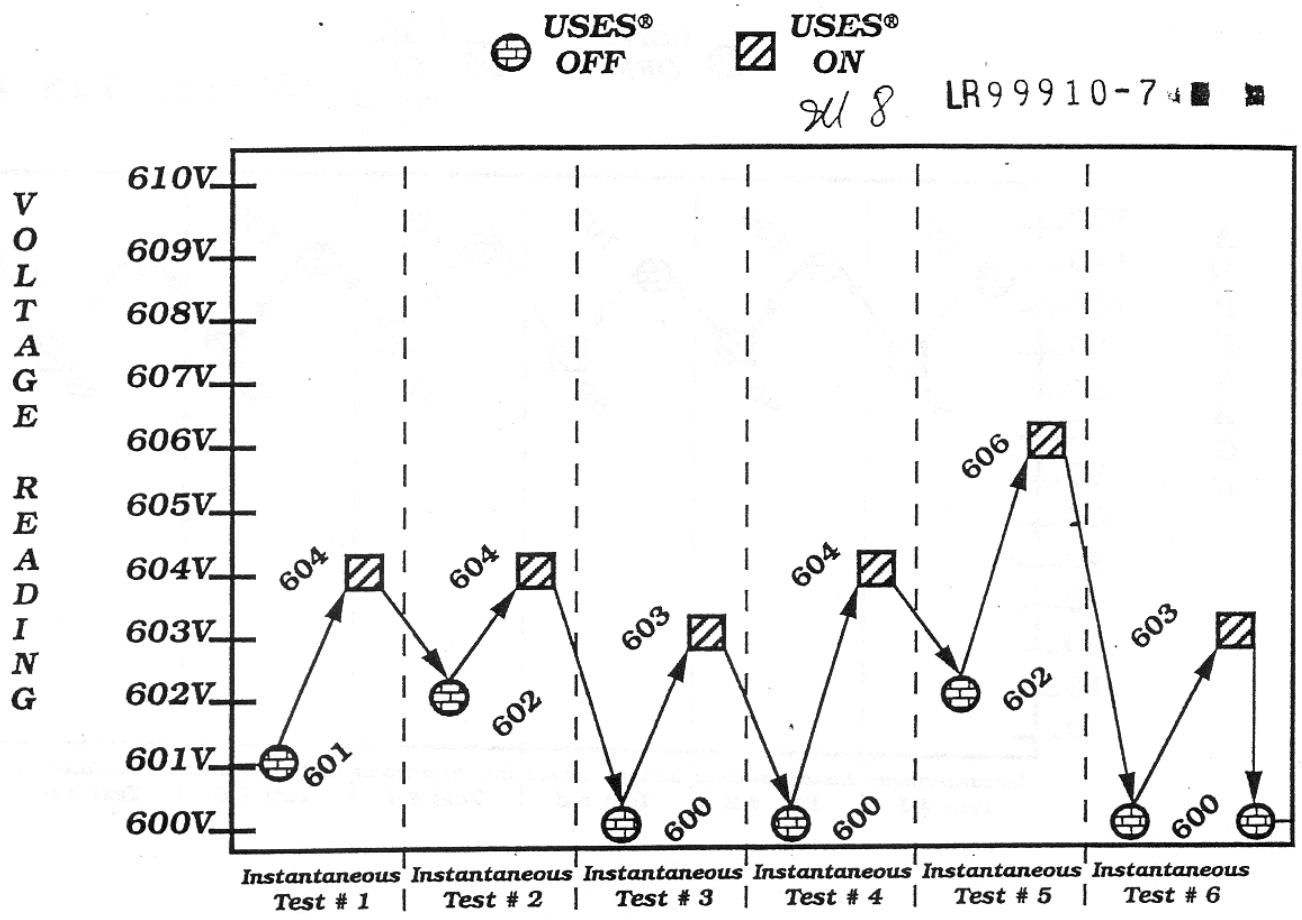

On this evaluation of the USES® CMES-3D 600 unit, off line the voltage reading was an average of 600.8 Volts.

When the USES® CMES-3D 600 unit was energized on line, the Voltage increased to 604 Volts. This is an increase of approximately 3.2 Volts with USES® on line.

NOTE* Voltage readings were equivalent on both the first floor Electrical room and at the second floor MCC Control Cabinet in the Ventilation Room.

Graph #2

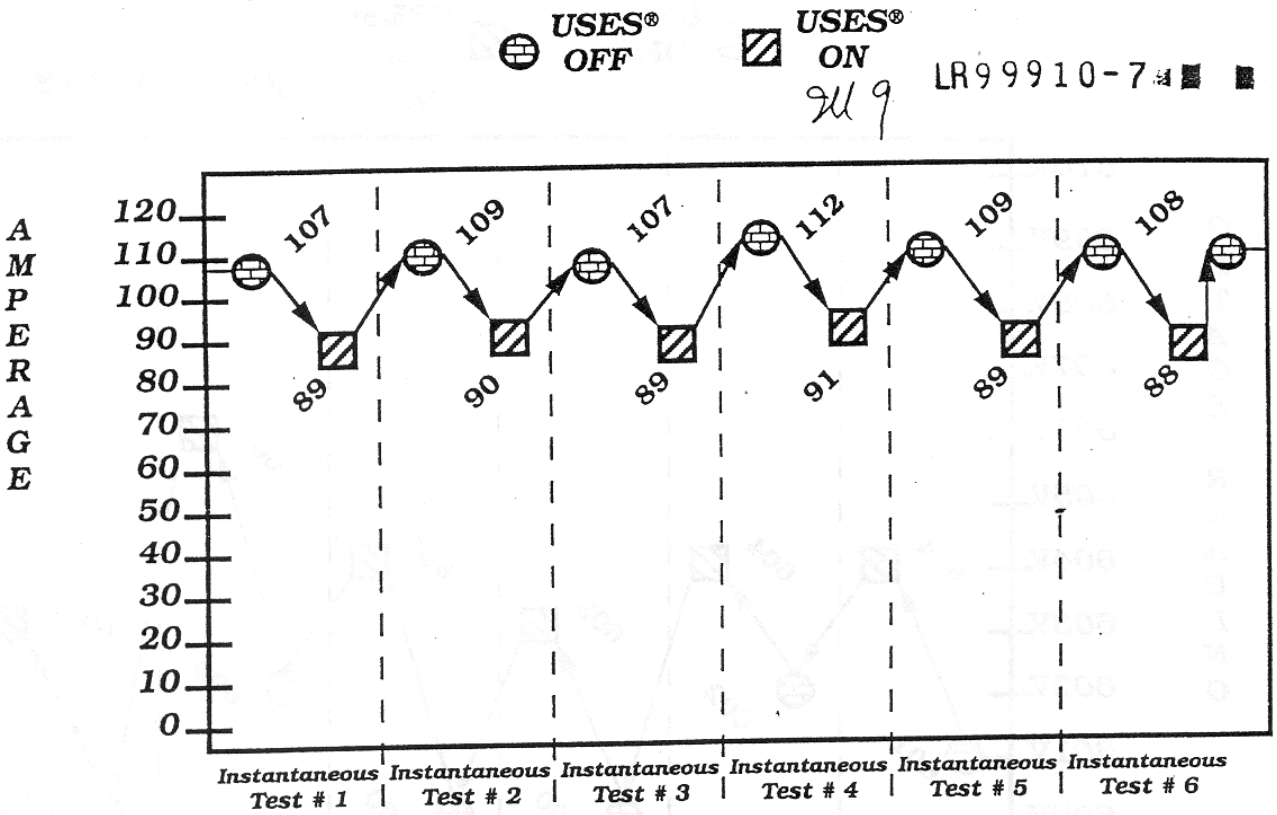

On this evaluation of the USES® CMES-3D 600 unit, off line the Amperage reading was an average of 108.6 AMPS.

When the USES® CMES-3D 600 unit was energized on line, the Amperage was reduced to 89.3 AMPS. This is a reduction of 19.3 in Amperage with USES® on line.

NOTE* Amperage readings with USES® on or off line remained at 108 AMPS on the second floor Ventilation Room MCC Control Cabinet. The USES® unit did not change the characteristics of the load.

Graph #3

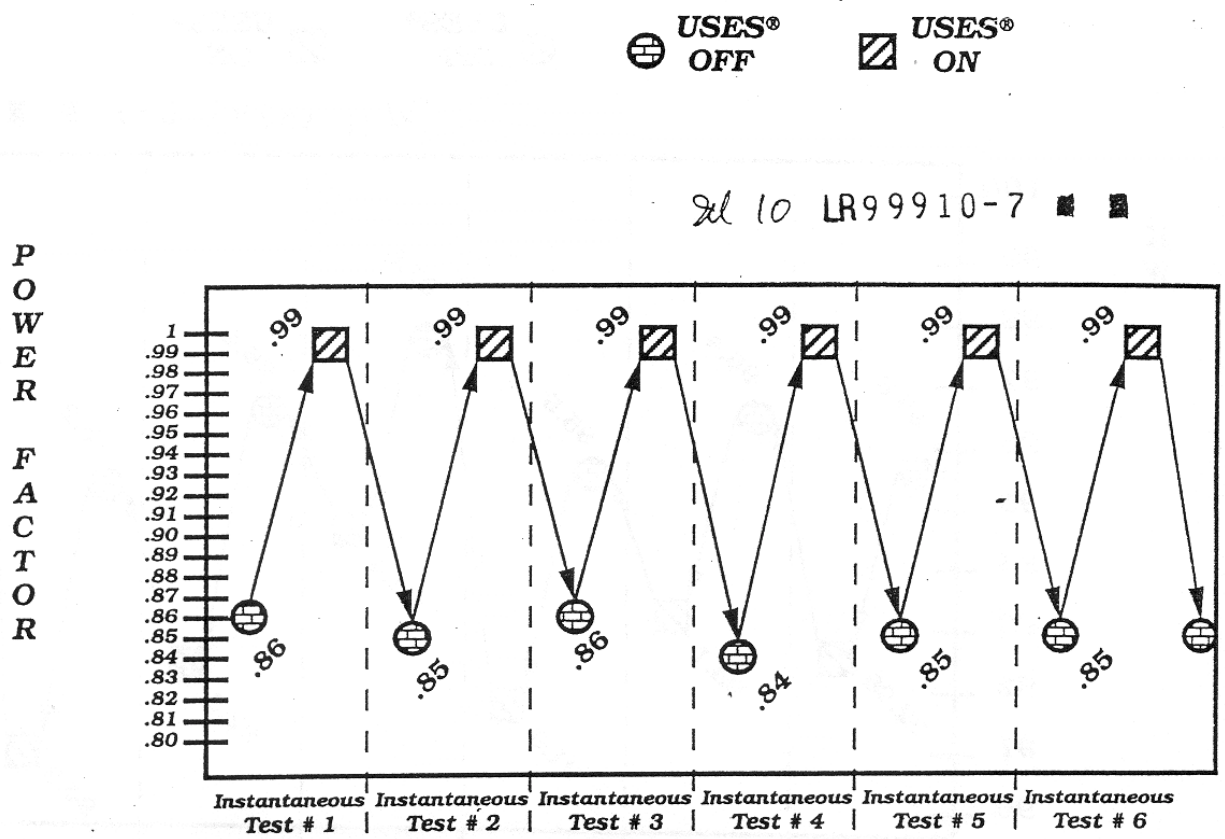

On this evaluation of the USES® CMES-3D 600 unit, off line the Power Factor reading off was .85.

When the USES® CMES-3D 600 unit was energized on line, the Power Factor was increased to .99. The unit increased efficiency of this system.

NOTE* Power Factor readings with USES® on or off line remained at .86 Power Factor on the second floor Ventilation Room MCC Control Cabinet. The USES® unit did not change the characteristics of the load.

Graph #4

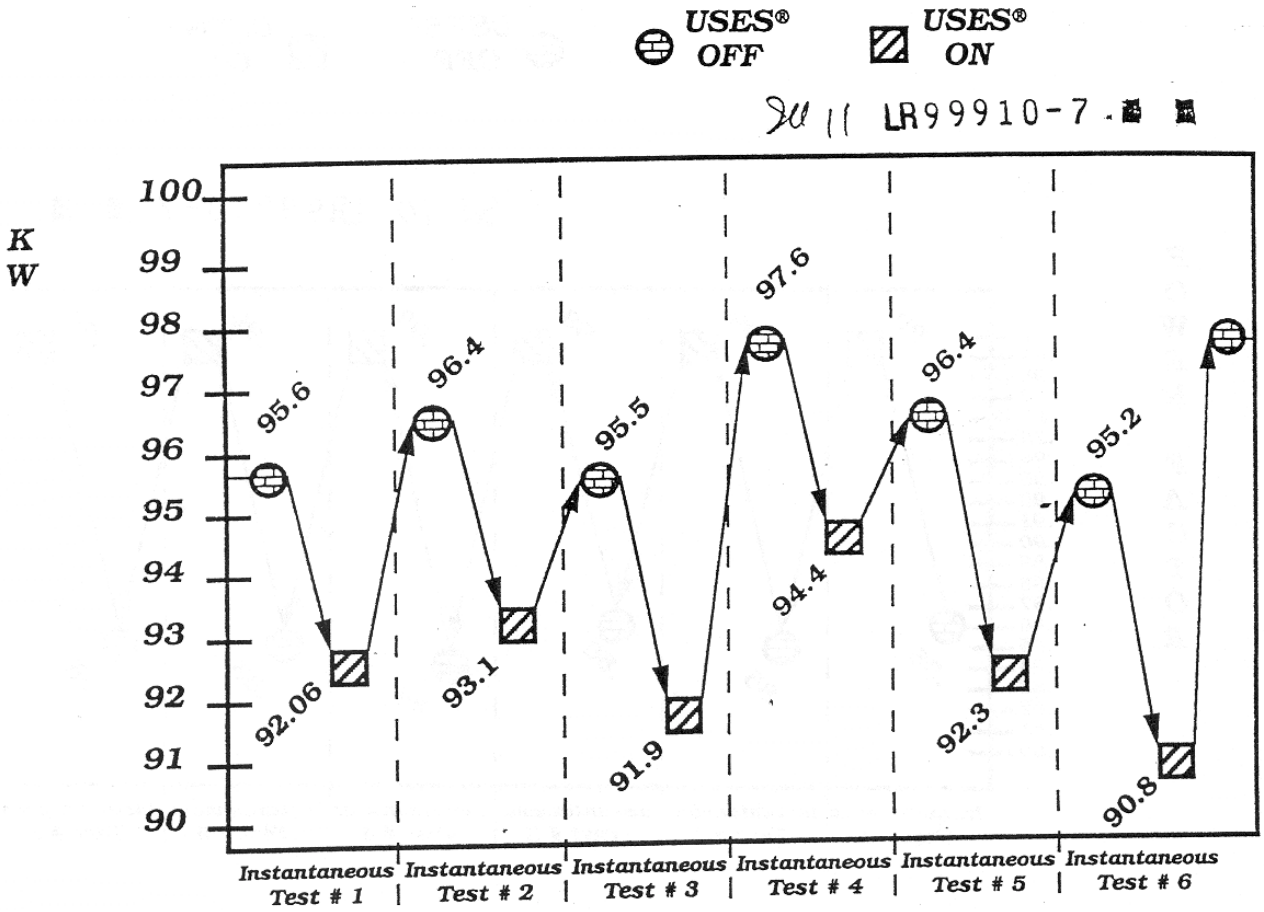

On this evaluation of the USES® CMES-3D 600 unit, off line the KW reading off was 96.1.

When the USES® CMES-3D 600 unit was energized on line, the KW was decreased to 92.42. This is a savings of 3.7% with USES® on line. The unit increased efficiency of this system.

NOTE* KWH readings with USES® on or off line remained at 96.5 KWH on the second floor Ventilation Room MCC Control Cabinet. The USES® unit did not change the characteristics of the load.

Graph #5

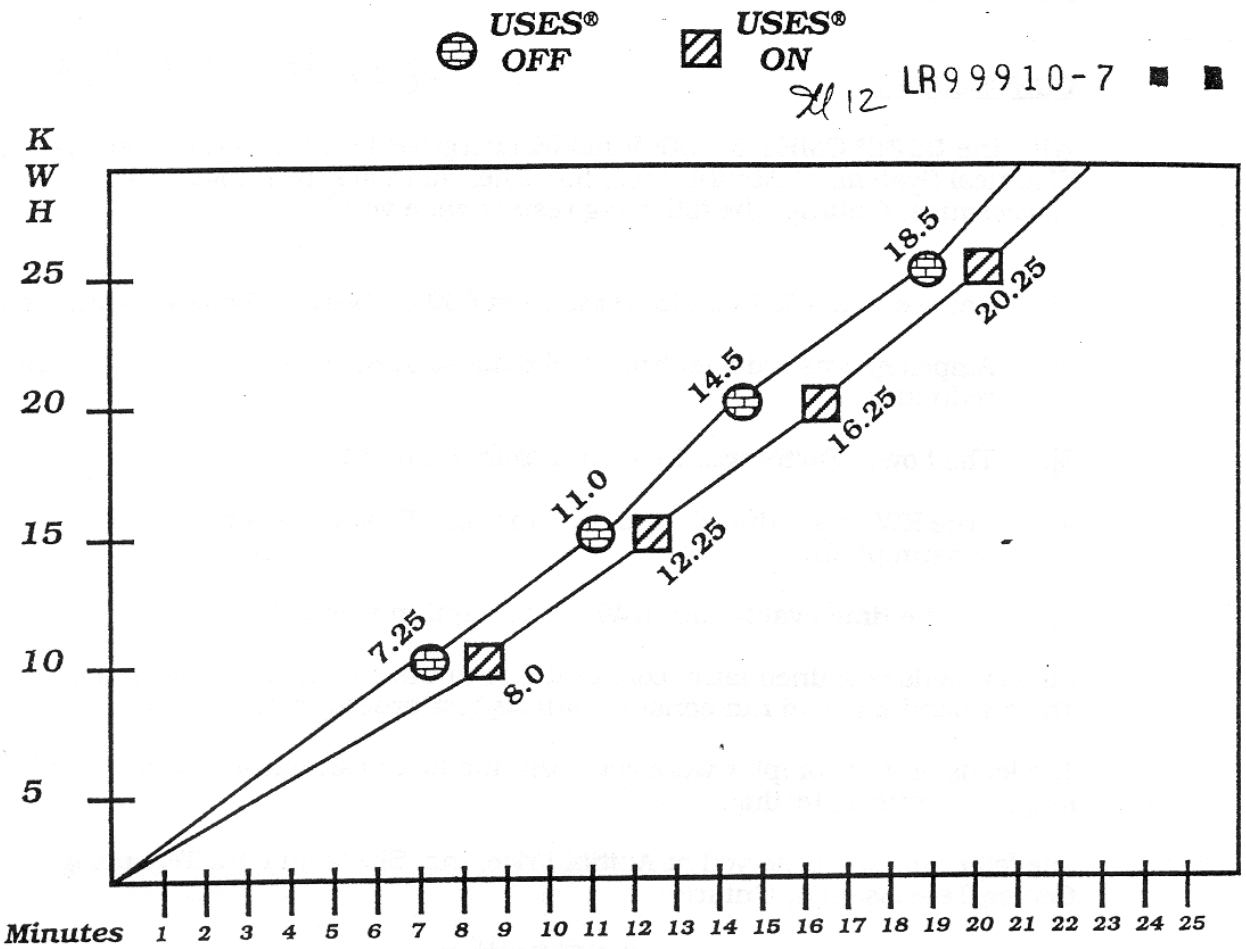

On this evaluation of the USES® CMES-3D 600 unit KWH versus time study. By using 25KWH as a cap. and the amount of time it took to reach the cap KWH.

As it shows in the graph above, there is a reduction of KWH consumption. With USES® off, it took 18.5 minutes to 25KW. With USES® on, it took 20.25 minutes to use 25 KWH. This graph is to show it took 1.7 minutes longer to reach 25 KWH with USES® on line.

Re: Test Results of the USES® Product

CONCLUSION: 9U 13 LR99910-7

With the **USES®** CMES-3D 600V model energized into the Ventilation System Electrical System, at Abitibi Price, Inc. Sheridan Park Technology Center, Mississauga, Ontario, the following results were verified:

1]. Voltage had a 2.3 Volt increase from 600.8 (Average) Volts to 603.1 Volts.

2]. Amperage was reduced from 108.6 AMPS to 89.3 AMPS, a 19.3 Amperage reduction.

3]. The Power Factor was increased from .86 to .99.

4]. True KW was reduced from 96.1 to 92.3. This was a 3.8 KW reduction in consumption.

5]. On the time evaluation, KWH consumption was reduced.

All test loads remained fairly constant due to the steady temperature outside. The air handling load ran constant during test procedures.

The loads on the complex were constant due to all variable loads were rendered inoperable during testing.

The following was observed at Abitibi Price, Inc. Sheridan Park Technology Center, Mississauga, Ontario:

- **KW Savings**
- **KWH Savings**
- **Reduction of Amperage**
- **Voltage Regulation**
- **Power Factor Improvement**

Utilization of Canceling Reactive Currents to Improve Power Factor

by Robert T. Emmet, PhD

Robert T. Emmet, PhD
Pure Power Systems, Inc.
422 Holly Drive
Annapolis, MD 21403

In Industrial Circuits, the heavy use of induction motors, with their associated magnetizing currents, increases the amperage demanded from the Utility. These circuits are inductive with a Power Factor (PF) less than unity. It is customary to balance the inductive reactance of these circuits and to restore the PF toward unity by adding capacitors (CAPS) in parallel with the inductive loads or in parallel with the main plant feeds at the service entrance. When the inductive and capacitive reactances are matched, then the circuit is in parallel resonance and the amperage demanded is minimized. Typically 3000 to 4000 micro farads are added per phase to match the inductive reactance of a 100 HP inductive 480 volt motor. To maintain the balanced reactance, the capacitors must be switched on/off with the motors. If the CAPS are on while the motors are off, the plant goes capacitive**,** which increases the amperage demand. This complex switching task is often simplified by installing a variable capacitor bank at the service entrance with a feed-back control maximizing the Plant Power Factor. Such variable capacitor banks raise the plant PF, eliminating the PF Penalty from the bill, but they do not correct the PF within the plant nor do they reduce the I squared R power loss within the plant.

In AC circuits, as frequency increases, capacitive reactance decreases and inductive reactance increases. RCL (Resistance/Capacitive/Inductive) Resonance occurs at the frequency where the Inductive Reactance of the circuit equals the Capacitive Reactance of the PF CAP Bank. In modern circuits there are substantial harmonics caused by VFD (variable frequency driven) Motors and other solid state loads. If any existing harmonic frequency coincides with this resonant frequency, the magnitude of that harmonic increases significantly. If that harmonic is of a low order, 3rd, 5th, 7th , or 9th, then the effect of that harmonic can distort the system voltage or current wave form**.** This distortion causes problems such as motor overheating, breaker tripping, transformer overheating or damage to capacitors and motors. Also, in the ac circuit, a serious voltage condition occurs as a result of this Harmonic RCL Resonance**.** The circuit total impedance (including the CAP) is very high at the resonant frequency. If the VFDs generate harmonic current at the resonant frequency, large harmonic voltages will be developed at the CAP and at the transformer bus. These harmonic resonances are very dynamic conditions which create voltage transients that travel throughout the plant often burning out motor field coils and overheating transformers.

PF Cap banks are particularly vulnerable to the detrimental effects of power system harmonics. Most CAPS are designed to operate up to 110% of the rated voltage and 135% of the rated kVAR. Large magnitudes of current and voltage harmonics can exceed these limits and cause serious CAP bank damage. Since Capacitive Reactance is inversely proportional to the frequency, CAP banks act a sinks for the current harmonics in the system. This often causes CAP fuses to blow or CAP damage when fuses are not present. Incidentally, because of this damaging RCL Resonance effect set off by harmonics, CAPS or CAP Banks are not used for PF Correction in Navy Ships.

Utilization of modular USES Units is an improved method of PF Correction, that does not use massive capacitors or CAP Banks. The modular USES Unit can be readily retrofitted into inductive circuits without paying particular careful attention to impedance matching or without setting up the conditions for RCL Resonance. The USES Unit co-generates the capacitive reactive current instead of using large CAPS. The resonant circuit within the USES Unit consists of three-phase CAPS typically 1/50th the size of traditional PF CAPS while obtaining the same PF effect. These resonant USES Circuits are linked with wrap-around magnetic chokes that connect the electrical phases magnetically. The 3-phase, 480 volt USES Unit inserts 27 amps of canceling capacitive reactive current through each USES phase lead into the plant distribution system. This leading current migrates throughout a plant vectorially canceling any lagging inductive current, and thereby locally correcting the PF. USES Units have the benefit that they don't need to be switched on/off with the motors because if the canceling leading current saturates a plant to unity PF, then that current migrates out into the grid. This maintenance-free PF control system is less critical and the total system impedance is reduced.

Trigonometric calculations of the application of Kirchhoff's Law to the vectorial combination of amperages of different magnitudes and phase relations are given by Langsdorf (1937), in chapters 1 - 3. It is exceedingly cumbersome to apply these calculation methods to circuits as complex as the USES Unit and industrial power systems in harmonic RCL Resonance. Statements herein concerning the relationships between the of various components, such as CAPS, USES Units, motors, VFDs, conductors, etc. relate to the system metrics of power factor, harmonics, voltage, amperage, KVAR and kW taken from the Utility Bill. USES Units appear to provide reactive current that corrects the PF and lowers the amperage and kW demand of the circuit. This USES PF control system is less critical to operate and the harmonic problems are greatly reduced.

USES Unit have the following additional benefits, which are:

a) In 3-phase circuits, USES Units bring the magnitudes of both the phase voltages and amperages closer to their means, because the phases are energetically linked through the magnetic chokes. Phases linked and balanced in this way are optimal for the operation of polyphase induction motors which were designed for phase-balanced power.

b) these phase-balanced motors produce less amperage harmonics and demand less kW;

c) the phase-balancing mechanism attenuates both amperage and voltage transient signals which protects sensitive loads;

d) energy stored in the USES Units support the system voltage through most short-term voltage sags and surges thus providing ride-through capacity for most short-term PQ disturbances ; and

e) the ruggedly constructed USES Units with no moving parts, are maintenance-free, generate no heat and have a useful life expectancy of 20-40 years.

USES Units can be retrofitted throughout a plant where they correct the PF locally while providing transient attenuation to protect local sensitive loads.When the distributed, articulated USES Units replace the massive PF CAP BANKS, they restore the power quality, protect the system operation and the maintenance man gets a full night's rest with his newly robust system.

RTE

References:

1. A.S.Langsdorf, "Theory of Alternative Current Machinery", Chapters 1-3, McGraw-Hill Book Co. New York and London, 1937.

2. Other USES References in earlier posted papers by Emmet and Ray.

Controlling Unbalanced Supply in Weak Utility Systems

Presented at the American Power Conference in Chicago April 16, 2003

Robert T. Emmet, IEEE Member
Dr.Emmet@Comcast.net
Pure Power Systems, Inc., 422 Holly Drive, Annapolis, MD 21403

and

Mohan L. Ray P.E., IEEE Senior Member
Mohan_L_Ray@mail.northgrum.com
Northrop Grumman Corp., P.O. Box 1897, Baltimore, MD 21303

Building new industrial plants in developing rural counties, as shown in Fig.1, has the advantage of low land cost, honest labor and lower taxes; however, the ability of the utility grid to supply power must be carefully planned in advance of construction. When a new plant comes on line, rural neighbors often suffer degraded power quality and all must adapt protective measures in order to maintain the electrical peace. In these weak or new utility supplies, the case of unbalanced phases presents a difficult challenge, particularly to 3-phase motors, because the sources of imbalance arise from numerous unsymmetrical conditions. Unsymmetrical transformer windings or transmission line impedance, unbalanced 3-phase loads or a large single-phase load cause unbalanced supply. Usually phases are only balanced at the generator, and sources of imbalance can be found throughout the system. However, regardless of the cause, in an ac-connected machine, even a small voltage imbalance can induce large negative sequence currents and harmonics, due to the relatively low negative sequence impedance of a motor. Induction motors are particularly sensitive to imbalanced operation, since harmonics in the stator cause local heating, which seriously affects the life of the machine.

Conventional remedies for phase imbalance begin with equal distribution of the single-phase loads. This can extend to involve costly modification of the incoming substation equipment, redesign of the feeder-line input to the various loads, or perhaps retrofit with an oversized machine. In 1985 the use of back-to-back thyristors or VCRs has been suggested to balance phase voltages [1].

As shown in Fig. 2, these thyristor pairs in series in each phase provide unsymmetrical variable supply impedances, which can be used to continually balance the voltage across the motor phases [2]. This same configuration has also been used more recently to control voltage flicker resulting from voltage drawdown associated with motor starting [3]. Thyristor switched capacitors were used to control series capacitors to achieve the desired voltage control in a weak utility supply that did not provide sufficiently high short circuit current to adsorb the resulting harmonics.

Fig.1. Bookmobile in Bayou de Large, 15 miles south of La Houma, Lousianna. Bringing change to rural areas can often upset the boat.

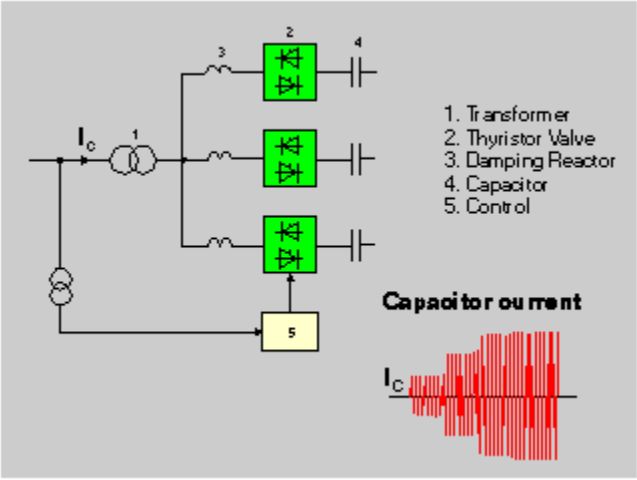

Fig. 2. Thyristor switched series capacitors used to balance motor phase [1, 2] and to control voltage flicker [3].

In the case of the thyristor-switched-series-capacitor (TSSC) unit used to control the voltage flicker in a rural county [3], after installation, thyristor failures caused numerous TSSC unit trips. The cause was traced to poor temperature control. Dirty filters, clogged airways and insufficient cooling capacity have all contributed to numerous component failures. Also, series thyristors contribute severe harmonics to the system and their control system is impacted by the same harmonics. Harmonic filters are usually employed to increase thyristor reliability. Voltage harmonic distortion can often

be controlled by a single high pass filter, but the reduction of current harmonics usually requires installation of multiple tuned filters, each of which reduces only one of the many harmonic frequencies produces by the solid state power electronics. Thus, filters to bring equipment into compliance with IEEE 519-1992 tend to be large, complex and costly. Our experience is to avoid power electronics and to use alternative means to balances phases and support voltage.

In weak utility systems because of more direct contact between neighbors, it is not advisable to use unreliable equipment that produces heat or harmonics. The release of IEEE Std. 510 1992, "Recommended Practices for Harmonic Control in Electric Power Systems", leads to new concerns and restrictions by utilities about the harmonic effects of thyristor controller equipment. Although IEEE 519-1992 addresses only voltage distortion, the latest version severely limits the amount of current distortion allowed. Harmonics are more severely restricted in weaker supply systems with lower short circuit currents. IEEE 519 discourages the use of thyristor controls in these systems. Also, the option of upgrading to an oversized machine would waste precious amperage capacity. In weak utility systems, we recommend the phase balancing USES Unit, which is multi-purpose equipment with many additional beneficial effects. The following paragraphs describe the characteristics of these low maintenance passive line conditioners.

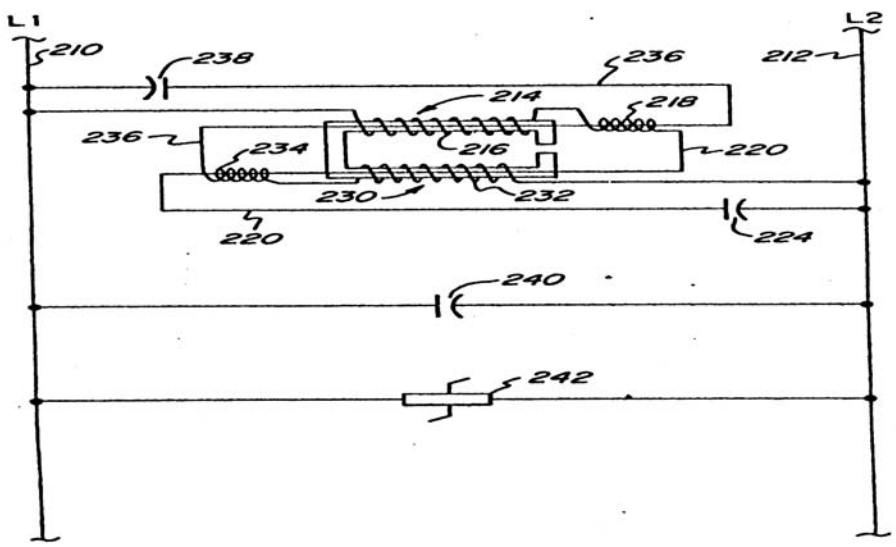

Fig. 3. Three wrap-around magnetic chokes connect the phase lines in a delta, 3-phase USES Unit. This robust circuit uses 6-10 AWG wire, resist lightning surge and does not heat up.

LISA, Please rotate this figure. TX Bob

USES TEST PROGRAM

In 1998 at the Northrop Grumman Corp. (NGC) Test lab in Sykesville, MD, a 3-phase, delta USES Unit", was installed parallel to a 150 HP chiller motor in the HVAC System [4, 5]. To evaluate claims that the device improved power factor (PF) and reduced real power (kW) demand, a test program was designed to precisely describe the effect on the motor circuit. Cutler-Hammer Engineering Systems Services, Inc. (CHESS) [6] performed the test under separate contract and the results have been published and discussed [7, 8, 9,10]. As continuing discussion of the data, herein, we suggest how, by balancing the 3-phase currents and voltages, several parameters of Power Quality are remarkably improved. Power Quality is described as the best quality power to operate specific equipment or process with the lowest level of operating problems. CHESS data are shown in Tables 1 and 2 and in Figs. 4 and 5.

USES SURGE SUPPRESSION

Between October 1993 and July 1994 Icelandic USA, Inc. of Cambridge, MD installed eleven 480-volt, 3-phase USES Units parallel to the main compressor motors in the north end of that plant [11]. On Saturday, November 26, 1994, major electrical damage occurred in the south end of the plant. Sifting through the evidence and from the utility records, they believe there was a 20% voltage sag on 3-phases for about 10 cycles. In the plant south-end, the sag knocked out one of the 1-phase transformers that serve the light weekend loads. The phase protection in the south-end never tripped, and its magnetic coil melted. Several motors were damaged by single-phase current, motor starters failed and contacts were welded together. No damage occurred in the north-end even though all twelve (12) 1-phase transformers on the roof were wired in parallel. The installed 11 USES Units protected all the north-end motors and their associated protective equipment, which drew 90% of the current during the weekend. These units not only saved the large motors from damage, preventing a loss of temperature in the freezers, but they protected the step-up transformers. The investment in USES Units was repaid by this single incident. Icelandic went on to install 55 USES Units.

In October 2001, according to utility records, 1000-volt spikes hit Icelandic in two or three phases. The spikes had been caused by a fault from a circuit breaker test circuit in a neighboring plant. At Icelandic, the hit was adsorbed by two USES Units, which were the only damage in the plant. The units were analyzed and the thermal damage was repaired at USES Manufacturing, Inc. In both units, the plastic insulation was burned and the vapor pressure was sufficiently elevated to separate the lid from the polymeric unit enclosure. The first unit remained on-line until the internal terminal block fused and evidently absorbed sufficient transient energy to protect the rest of the plant. The second unit also heated up but remained on-line throughout the event. Both units were repaired and reinstalled. Because of the magnetic connection between the phases, during these extreme conditions, the units sacrificially attracted and dissipated the transients without other damage or loss of product. There were 12 million pounds of fish in storage. Two similar surge suppression events have been recorded at the IUSA Copper Wire Plant in Pasteje, Mexico.

USES POWER FACTOR CORRECTION

In 1985, the plant PF at Icelandic USA was determined to be 0.85. About 20 capacitors had been added in parallel to the motors and the initial interest in USES in 1993 was for power factor correction. By 1999, as the 55 USES units were connected to the plant circuit, the PF rose from 0.89 to 0.99. The added USES Units were compatible with the existing capacitors. For example, when testing multiple USES Units on the Motor Control Center (MCC) of a 500 HP 480 volt motor, 4 units brought the PF up to 0.98, 5 units to 1.00 and 6 units to 0.98 on the capacitive side. As a result of the findings of the above test, Icelandic installed 4 units on that MCC as shown in Fig. 4. Each 480-volt USES Unit produces about 10 KVARs of PF Correction.

USES Units have several benefits over capacitors (Caps) for PF Correction:

1) LOCATION NOT CRITICAL. With USES, the location of the Units is not critical because a small, capacitive current linked from an adjacent phase makes the correction. With Caps, location, sizing and switching the Caps with the loads is important because of the large circulating currents. One 480 volt, 3-phase delta USES Unit balances a 100 HP Motor

2) BREAKERS, NOT FUSES. With USES, 3-pole magnetic breakers are used to disconnect 3 phases at once to keep the circuit balanced. With Caps, non-reusable fuses are necessary to prevent thermal tripping.

3) RESONANCE. With USES there is no possibility of destructive resonance because of the damping effect of the phase balancing. With Caps, voltage variation is caused by unstable resonances, which form in the tank circuits with the motors. Harmonics in the tank circuits can reinforce the resonant frequency and damage connected loads. Caps have lower impedance at the higher harmonic frequencies thus allowing larger currents to blow the Cap fuses. Because of the possibility of resonance leading to "voltage hotspots", PF CAPS are not used on Navy ships [13].

4) LOW MAINTENANCE. USES and Caps should both be accessible for the inspection of the contactors. With USES there are indicator lights on each phase. Caps should be frequently checked with a clamp-on ammeter to be sure they are operating.

5) MOTOR DAMAGE. Over compensation with Caps can lead to the circulating currents exceeding the magnetizing current of the motors, resulting in self-excitation. With USES, because of the low, correcting currents, there is no possibility of self-excitation or resonance.

6) STABLE VOLTAGE. Leaving Caps connected during lightly loaded conditions leads to over-voltage, which can damage connected loads. With USES connected, the voltage

is balanced between the 3 phases, constant voltage is maintained and voltage transients are attenuated.

7) MORE EFFECTIVE APPLICATION. Because of the danger of over-compensation, when using Caps, the PF has traditionally been corrected to0.90. With USES Units, small capacitive currents cancel the inductive currents, and if there is over-correction, then only a small, stray current is involved. Therefore, with USES Units, the PF can be corrected yo1.00. This higher plant PF reduces the utility bill further, because above 0.90, the PF Penalty becomes a PF credit. If there is no PF Penalty, then the greater system impedance balance near 1.00 PF minimizes the current throughout the system and therefore the I^2R power loss.

8) MORE EFFECTIVE LOCATION. Because of the large, surging currents, Caps are usually located in banks near the service entrance, where the conductors are large. These cap banks affect the plant PF for billing purposes only. Because the locations of the USES Units are not as critical, they can be placed close to inductive loads and therefore they reduce the amperage demand throughout the plant for greater benefits and savings. Also, a USES Unit on each panel isolated that panel from transients and surges of amps and volts.

9) MULTI-PURPOST EQUIPMENT. Caps heat up and use power. USES Units are magnetic connections between phases. They do not heat up and they save power. Furthermore, USES Units provide several additional benefits as will be discussed below.

USES PHASE BALANCE

A USES Unit provides a balancing magnetic connection between phases. The magnetic chokes store and release system capacity, thus stabilizing voltage. The cores of the chokes are split and will not resonate or saturate. In the process of balancing phases, a small reactive current in each USES lead (4 to 30 amps) corrects the PF. By magnetically connecting the phases close to the load, USES balances the phases thus relieving electrical stresses, increasing the efficiency and reduces the harmonics of three phase motors. The transformers likewise have less hysteresis and eddy current loss, less harmonic loss and increased efficiency [15, 16].

USES TRANSIENT ATTENUATION

At Icelandic USA, Inc. USES maintained 3-phase voltage or amperage sags and surges by contributing its capacitive energy through the chokes to the 3-phases of the branch circuit. USES also attenuated 1-phase transients of voltage or amperage by sharing amplitude between the phases. A spike is suppressed to a manageable level and adsorbed into the system. The magnetic chokes in USES are self-healing, inductive suppressers and handle most of the circuit imbalance by energy distribution between the phases over time. USES units do not heat up, and there is no thermal cycling of the parts, therefore, they give long service. To protect the USES Units and the branch circuits from large transients associated with ground faults and lightning, a Metal Oxide Varister (MOV) is included in each phase of the USES Circuit. The MOV's

dissipate the heat after each surge. Each MOV is in series with a lamp, which occasionally indicates the need for MOV replacement. If a USES Unit is connected to only 2 phases, it will try to balance the third phase and the 2 lights will be dim. Checking the phase contactor on the dark phase can usually restore unit balance.

USES HARMONICS REDUCTION

The most useful data, shown in Table 1, is from the CHESS on/off test of a 150 HP Chiller Motor [6]. Table 1 show that in the motor circuit a 30% reduction in amperage harmonics coincides with the 10% reduction in kW demand. The 1-phases voltage and amperage show better balance with USES on which indicates that phase balancing and reduced current harmonics is the basic mechanism of USES. With the reduced and balanced eddy currents, the motor runs cooler and the energy that was trapped in amperage harmonics would be released for motor action. Thus USES also improves the harmonic power factor of the motor and of the plant, which yields cooler, more reliable distribution system.

.

	100% RLA		90% RLA		75% RLA		50% RLA	
Pwr. Var.	**ON**	**OFF**	**ON**	**OFF**	**ON**	**OFF**	**ON**	**OFF**
V_{LL}	495.3	495.5	497.2	495.8	496.1	497.3	497.9	495.8
Abs. Chg.	-0.2		1.4		-1.2		2.1	
I_L	170.6	188.6	143.1	162.4	115.4	131.2	89.9	93.2
% Chg.	-9.50%		-11.90%		-12.10%		-25.00%	
PF	0.998	0.996	1.000	0.991	0.997	0.968	0.915	0.836
% Chg.	0.20%		0.90%		2.90%		7.90%	
KW	84.3	93.1	71.1	79.8	57.1	63.1	31.8	38.6
% Chg.	-9.50%		-10.90%		-9.50%		-17.60%	
kVARS	-5.1	8.1	0.6	10.9	4.1	16.3	14.1	25.4
% Chg.	-163.00%		-94.90%		-74.80%		-44.50%	
KVA	84.5	93.5	71.0	80.5	57.20%	65.2	34.8	46.2
% Chg.	-9.80%		-11.80%		-12.30%		-24.70%	
V_{THD}	1.985	1.949	2.084	1.932	2.026	1.965	2.119	2.033
% Chg.	0.80%		7.90%		3.10%		4.20%	
I_{THD}	1.938	2.844	2.372	3.31	2.884	4.206	3.99	4.911
% Chg.	-31.90%		-28.30%		-31.40%		-18.80%	

Table 1. Summary of 3-phase data from CHESS on-off Test. The Values were calculated from single-phase measurements. Single-phase data can be found in CHESS Report [6].

Figure 4. Bank of 4 USES Units connected to the H-10 Motor Control Center for 500 HP Compressor H-10 at Icelandic USA, Inc. Individual units are wired to individual 30 amp breakers and the connection passes through a 150 amp master breaker to the incoming power lugs in the MCC via the cable at lower right.

CONTINUOUS PLANT OPERATION WITH USES

Perhaps the most valuable contribution to the overall plant operation efficiency is fewer production interruptions for maintenance. Modern plants are complex, highly coordinated operations with the greatest cost being labor. Labor costs continue during down time when overall production becomes negative. By balancing and protecting the electrical system, USES keeps the plant operating smoothly and the profits high.

USES CIRCUIT EFFICIENCY INCREASE

With balanced phases the amperage harmonics are reduced in operating motors. The Cutler-Hammer test showed that when the phases are balanced by USES, this energy is released for motor action and the kW demand of the 150 HP motor is reduced from 93 to 84 kW. The amperage is also reduced by 20 Amps by the improved power factor. The entire distribution system is cooler and capacity is released, also, several losses are reduced in the transformer, which is essentially a motor at zero rotation. The improved efficiency of any circuit by USES is proportional to the degree of phase imbalance correction. Until this was understood, the varying results of single load tests evaluated. Phase imbalance is often transient. USES is your electrical watchdog, which balances the phases constantly and is in service when you need it.

In 1997, Parsons [17] reported, "Power Conditioner dramatically slashes manufacturers electric bills". These conditioners installed by Strathmore Electric of Stamford, CT were USES Phase Balancing Units. In addition to protecting and cooling the circuit, USES continually saves at the meter. From these savings alone and independent from the other protective features, a typical USES payback is 2 to 3 years. To receive maximum payback and protective benefit, USES Units should be distributed throughout a plant, on each panel with a significant inductive load. A 4-wire WYE USES Unit is typically placed at the service entrance to attenuate external transients on the phases and the neutral. A distribution system fully engineered with USES Units is balanced for greater efficiency and protected against externally and internally generated transients. Each panel within the plant is isolated with USES for effective damage control.

NEW USES HARMONICS DATA

Spectral harmonic data from the CHESS Test [6] is shown in Table 2. The typical data are shown here for the A Phase at 75% RLA. Table 2 and Fig. 5 show that the USES Unit decreases the dominant 5th harmonic of the stator field by 46%. There is a slight increase in the higher harmonics, 17th-23rd, however, their effect on motor performance may be neglected because of the much smaller absolute magnitude of these field vectors and the much slower harmonic field rotation. Also, the magnetic reactance projected across the air gap by the stator phase belt harmonic fields decreases with the

4th power of the harmonic order and therefore the effect of the 17th-23rd fields on motor operation is very small.

Table 2

Cutler-Hammer Motor Harmonics Data for 75 RLA

Harm. Order	ON	OFF	Harm. Order	ON	OFF
2	0.165	0.142	14	0.043	0.000
3	1.055	0.918	15	0.033	0.000
4	0.066	0.057	16	0.000	0.000
5	1.879	3.414	17	0.791	0.142
6	0.033	0.018	18	0.066	0.000
7	1.714	2.134	19	0.264	0.057
8	0.000	0.028	20	0.033	0.000
9	0.033	0.057	21	0.066	0.028
10	0.033	0.026	22	0.033	0.000
11	0.396	0.512	23	0.165	0.085
12	0.000	0.000	24	0.000	0.000
13	0.231	0.142	25	0.033	0.026

Fig. 5 Motor Harmonics for Phase A at 75 RLA with USES on/off. MPBD = Magnetic Phase Balancing Device

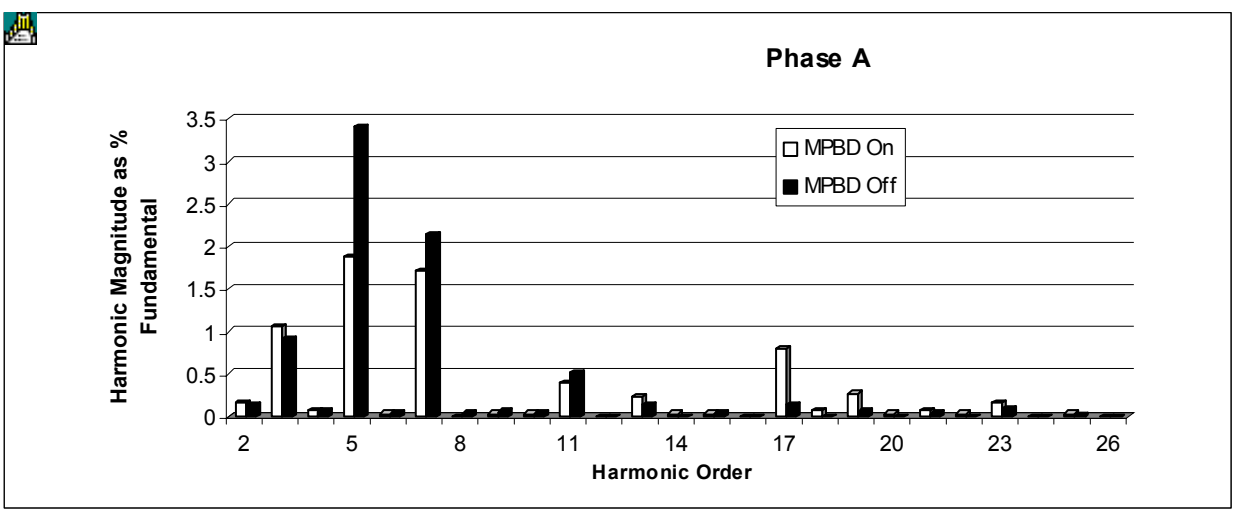

These new harmonic data show that by balancing the phases, the wrap-around magnetic chokes with USES, eliminates by half the backward rotating 5th order stator

harmonic field, reduces by 20% the 7th harmonic and shifts some of this harmonic energy above the 15th order, which do not effect motor performance. This consequence of phase balancing provides major opportunities for advances of induction motor design and motor efficiency, which were not possible in the hay-day of motor research, because there was no means of balancing phases by a single circuit component. This 50% reduction of the 5th harmonic in induction motor circuits is responsible for most of the 10 % increase of motor efficiency shown in [7, 8, 9, 10] and this is an important property of the USES Unit. This new capacity to significantly reduce the backward rotating 5th harmonic without modifying the coil pitch and coil distribution factors, Kp and Kd, This feature of USES will motor and circuit design to be reviewed and optimized. The installation of the USES Unit in the existing power distribution circuits parallel to the motors, particularly in weak utility systems should provide major additional benefits, such as phase balancing, power factor correction, transient protection and surge absorption, in addition to increasing motor efficiency and performance characteristics by controlling the 5th harmonic of the stator field. Phase Balancing is the wave of the Future.

SUMMARY

Using solid-state power components like Thyristors and SCRs to balance electrical phases produce voltage and current harmonics, which must be controlled in weak utility systems. The magnetic USES Phase Balance System decreases harmonics and has other beneficial effects. New harmonic data from a USES-Motor test circuit shows that USES decreases the 5th and 7th harmonic, which improves motor performance. USES also attenuates voltage and amperage transients, carries the distribution system through short sags and surges, increases the efficiency and lowers temperature of induction motors and increases both the displacement and harmonic power factors. USES is installed in parallel, does not cycle thermally, requires little maintenance and has long service life.

We would appreciate your questions. R.T. Emmet and M.L. Ray

ACKNOWLEDGEMENT

The authors wish to thank Robbie Caldwell and Mike Bradshaw of Coldwater Seafood Corp. for access to records, figures and photographs.

REFERENCES

[1] E. Muljadi, R. Schiferl and T.A. Lipo, "Induction Machine Phase Balancing by Unsymmetrical Thyristor Voltage Control", IEEE Trans. Ind. App., vol 1A-21, pp 610-616, May/June, 1985.

[2] J. Oyama, F. Profumo, E. Muljadi and T.A. Lipo, "A Digital Voltage Controller for Reducing Induction Motor Phase Imbalance", in Confr. Rec ICBM 99, Pisa, Italy, 1988.

[3] M. Halpin, "Designing Industrial Systems with a Weak Utility Supply", IEEE Ind. App. Mag. March/April, 2001.

[4] E.B. Wohlforth, "AC Power Conditioning Circuit", U.S. Patent # 5,105,527, 11pp, 1992.

[5] Canadian Standards Association Report # LR 99910-7, "Witnessing Field Measurements with CSA Certified PF Correction Capacitor", 17 pp, 1997.

[6] A.W. Baum, "Power Measurements for Northrop Grumman Radar Test Facility, Chiller 2A, Sykesville, MD", 34 pp, 1999.

[7] M.L. Ray and R.T. Emmet, "A Magnetic Device for Improving Power Quality", Power Quality Section of Power Systems World 99, pp 234-246, 1999.

[8] R.W. Hassard, "Mr. Kirchhoff Looks at USES', Unpublished Manuscript, 2001.

[9] J. Reinsborough, "Application of Power Conditioners to Reduce Power Consumption", Proceedings of the Canadian Pulp and Paper Association, Vol 81, pp 205-212, Feb. 1995.

[10] J. Reinsborough, "Theory of the USES Unit", Abitibi Price, Inc. Internal Report, 4pp, 1995.

[11] R.T. Emmet, "The USES Unit and the Electrical System of a Cold Storage Plant", Refrigeration Engineers and Technicians Association, Chicago, IL, Technical Report, 4pp, May 1995.

[12] B. Leung, Personal Communication, Dranetz-BMI, Inc. 2001.

[13] J. Goodman, Personal Communication, Naval Ship R&D Lab, Annapolis, MD 1995.

[14] R.T. Emmet and M.L. Ray, AC Magnetic Phase Balancing -- A Method of Power Quality Control, Annual Meeting IEEE/IAS, Pittsburgh, Oct. 15, 2002.

[15] R.H. Engelmann and W.H. Middledorf, "Handbook of Electric Motors", pg 298, Marcel-Dekker, Inc., 1995.

[16] A.S. Langsdorf, "Theory of Alternating Current Machinery", McGraw-Hill Book Company, Inc,
pg 638, 1937.

[17] E.C. Parson, Editor, EC&M Magazine, "Practical Methods", pg. 70, September 1997.