Americraft
MANUFACTURING CO. INC.
INDUSTRIAL VENTILATING & EXHAUST FANS

March 20, 2014

Re: Americraft Manufacturing Company Inc., GSA Contract GS-07F-0675X Contract Terms and Conditions

Americraft Manufacturing Company Inc. acknowledges and agrees to the following GSA Contract (GS-07F-0675X) Terms and Conditions:

1a. TABLE OF AWARDED SPECIAL ITEM NUMBERS (SINs)

SIN	DESCRIPTION
563-27	Industrial and Commercial Heating/Air Conditioning Units, Air Purification Equipment, HVAC Systems, Boiler Systems, Space Heaters, Air Curtains, Fans and Blowers

1b. LOWEST PRICED MODEL NUMBER AND PRICE FOR EACH SIN:
(Government net price based on a unit of one)

SIN	MODEL	PRICE
563-27	**	**

1c. HOURLY RATES: N/A

2. MAXIMUM ORDER*: 563 27, $200,000 (per SIN per order).

*If the best value selection places your order over the Maximum Order identified in this catalog/pricelist, you have an opportunity to obtain a better schedule contract price. Before placing your order, contact the aforementioned contactor for a better price. The contractor may (1) offer a new price for this requirement (2) offer the lowest price available under this contract or (3) decline the order. A delivery order that exceeds the maximum order may be placed under the schedule contract in accordance with FAR 8.404.

3. MINIMUM ORDER: $100

4. GEOGRAPHIC COVERAGE: Domestic, 50 states, Washington, DC, Puerto Rico, US Territories and to a CONUS port or consolidation point for orders received from overseas activities

5. POINT(S) OF PRODUCTION: (Hamilton County) Cincinnati, OH 45349

Mailing Address: P.O. Box 1108 Mason, OH 45040
Physical Address: 7937 School Rd Cincinnati, OH 45249
www.americraftmfg.com

(513) 489-1047
(800) 848-2938
Fax: (513) 489-5288

6. DISCOUNT FROM LIST PRICES: 47% for products. For calculation of the GSA Schedule price (price paid by customers ordering from the GSA Schedule, and the price to be loaded in to GSA Advantage), the contractor should deduct the appropriate basic discount from the list price and add the prevailing IFF rate to the negotiated discounted price (Net GSA price). The current IFF is .75% and should be calculated as follows: Negotiated price divided by (1 minus .0075) which equates to Negotiated price divided by 0.9925. Example: ($100,000 / 0.9925) = $100,755.67

7. QUANTITY DISCOUNT(S): 1% orders valued at $100,000

8. PROMPT PAYMENT TERMS: Net 30 days – Information for Ordering Offices: Prompt payment terms cannot be negotiated out of the contractual agreement in exchange for other concessions.

9.a Government Purchase Cards must be accepted at or below the micro-purchase threshold.

9.b Government Purchase Cards are accepted above the micro-purchase threshold.

10. FOREIGN ITEMS: None

11a. TIME OF DELIVERY: 30 days ARO

11b. EXPEDITED DELIVERY: 14 Days ARO

11c. OVERNIGHT AND 2-DAY DELIVERY: Consult contractor

11d. URGENT REQUIRMENTS: Agencies can contact the Contractor's representative to affect a faster delivery. Customers are encouraged to contact the contractor for the purpose of requesting accelerated delivery.

12. FOB POINT: Origin

13a. ORDERING ADDRESS: Americraft Manufacturing Company, Inc
7937 School RD
Cincinnati, OH 45249-1533

13b. ORDERING PROCEDURES: For supplies and services, the ordering procedures, information on Blanket Purchase Agreements (BPA's) are found in Federal Acquisition Regulation (FAR) 8.405-3

Mailing Address: P.O. Box 1108 Mason, OH 45040
Physical Address: 7937 School Rd Cincinnati, OH 45249
www.americraftmfg.com

(513) 489-1047
(800) 848-2938
Fax: (513) 489-5288

Americraft
MANUFACTURING CO. INC.
INDUSTRIAL VENTILATING & EXHAUST FANS

14. PAYMENT ADDRESS: Same as contractor

15. WARRANTY PROVISION: Commercial

16. EXPORT PACKING CHARGES: Not applicable

17. TERMS AND CONDITIONS OF GOVERNMENT PURCHASE CARD ACCEPTANCE: (Up to the micro-purchase level)

18. TERMS AND CONDITIONS OF RENTAL, MAINTENANCE, AND REPAIR (IF APPLICABLE): N/A

19. TERMS AND CONDITIONS OF INSTALLATION (IF APPLICABLE): N/A

20. TERMS AND CONDITIONS OF REPAIR PARTS INDICATING DATE OF PARTS PRICE LISTS AND ANY DISCOUNTS FROM LIST PRICES (IF AVAILABLE): N/A

20a. TERMS AND CONDITIONS FOR ANY OTHER SERVICES (IF APPLICABLE): N/A

21. LIST OF SERVICE AND DISTRIBUTION POINTS (IF APPLICABLE): N/A

22. LIST OF PARTICIPATING DEALERS (IF APPLICABLE): N/A

23. PREVENTIVE MAINTENANCE (IF APPLICABLE): N/A

24a. SPECIAL ATTRIBUTES SUCH AS ENVIRONMENTAL ATTRIBUTES (e.g. recycled content, energy efficiency, and/or reduced pollutants):

24b. Section 508 Compliance for EIT: N/A

25. DUNS NUMBER: 092823269

26. **NOTIFICATION REGARDING REGISTRATION IN SYSTEM FOR AWARD MANAGEMENT (SAM) DATABASE @ http://www.sam.gov :** Registration valid until December 10, 2014.

James L. Ceddia
President

Mailing Address: P.O. Box 1108 Mason, OH 45040
Physical Address: 7937 School Rd Cincinnati, OH 45249
www.americraftmfg.com

(513) 489-1047
(800) 848-2938
Fax: (513) 489-5288

Americraft MANUFACTURING CO. INC.
INDUSTRIAL VENTILATING & EXHAUST FANS

GSA Schedule
Contract GS-07F-0675X

Company Overview:

Americraft has been manufacturing industrial fans and ventilation products since 1946. Americraft manufactures 5 industrial fan products consisting of 19 models ranging in size from 12”- 60” in diameter, as well as fan accessories. Americraft’s manufacturing plants, totaling 50,000 sq ft, provide fans to all 50 states & overseas as far away as South America & Saudi Arabia.

Past Performance:

- Experienced Customer Support Staff with in-house engineers and design services.
- Industrial fan provider to four (4) major Industrial Products Catalog Companies in the United States.
- Installation of Quality Industrial Fan Motors to meet The Energy Independence and Security Act of 2007 (Effective December 19, 2010).
- Primary provider of Industrial size wall exhaust fans for HOLT CAT - the authorized Caterpillar® heavy equipment and engine dealer for 118 counties throughout Texas.

GSA Contract: GS-07F-0675X

Schedule 56 – Bldg & Bldg Materials / Industrial Services & Supplies
SIN 563-27 – Industrial & Commercial Fans

Company Designations:

CAGE Code	68FX7
DUNS	092823269
ORCA Registration	Complete

NAICS Codes:

333412 – Industrial & Commercial Fan & Blower Manufacturing

FSC Codes:

4140 – Fans, Air Circulators, and Blower Equipment
4420 – Heat Exchangers and Steam Condensers
4540 – Misc Plumbing, Heating & Sanitation Equipment
5670 – Building Components, Prefabricated

UNSPSC Codes:

40101604 – Fans; 40101605 – Fan Accessories; 40101601 – Blowers

Industrial Fan Products

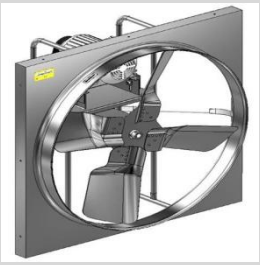

Exhaust Fans (Wall/Panel Fans)

Roof Ventilators/ Exhausters

Blowers (Volume & Pressure)

Man/Product Coolers

Ducts Fans with Factory Installed Belt Guards (Spray Booth Fans)

Accessories/Options:

- Belt or Direct Drive Single Phase or 3-Phase Motors
- Totally Enclosed (Explosion Proof, Fan Cooled, No-Ventilating, & Air-Over) Motors
- Motors In or Out of Air Stream
- Cast Aluminum or Steel Propellers
- Accessories:
  - ✓ Motor Covers
  - ✓ Shutters – Automatic All-Aluminum
  - ✓ Rear Box Guards
  - ✓ Raintight NEMA 3R Non-Fused Disconnect Switch
  - ✓ Flat Roof Curb
  - ✓ Low, Medium, or High Stand; Yoke Mounting (1-way or 2-way Swivel) Man / Product Coolers

Key Personnel:

Jim Ceddia – President
jceddia@americraftmfg.com
Jim has 35 years experience in the fan industry & started with Americraft in 1978. He has held every major manufacturing & business position within the company & has been largely responsible for its growth & success.

Vince Hartmann, P.E., MBA – Government Sales Manager
vhartmann@americraftmfg.com
Vince is a Retired 25-year Navy Veteran - Civil Engineer Corps (Seabee’s); certified (DoD) Defense Acquisition Professional & a Licensed Professional Civil Engineer in the State of Ohio.

Phone: 800-848-2938 or 513-489-1047 **Fax: 513-489-5288** **7937 School Road, Cincinnati, OH 45249**
www.AmericraftMfg.com

Americraft
MANUFACTURING CO. INC.
INDUSTRIAL VENTILATING & EXHAUST FANS

General Products Brochure

GSA CONTRACT - GS-07F-0675X
SCHEDULE 56 - Building and Building Materials / Industrial Services and Supplies
SIN 563-27 - Industrial and Commercial Fans

7937 School Road
Cincinnati, OH 45249
Office: 513.489.1047
Fax: 513.489.5288
www.americraftmfg.com

Vince Hartmann
Government Sales Manager
Service Disabled Veteran
Cell: 513.515.8498
vhartmann@americraftmfg.com

Duct Fans

Exhaust Fans

Man & Product Coolers

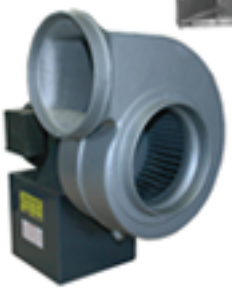
Blowers

Roof Exhausters

Americraft Manufacturing Company Inc.

Catalogue and Price List

Table of Contents

I. Duct Fans (Spray Booth Fans)

1. **Model B** - Industrial Tube Axial Belt Drive Duct Fans
2. **Model BCS** - Industrial Tube Axial Belt Drive Duct Fans – High Temperature & High Moisture
3. **Model DF** - Industrial Tube Axial Direct Drive Duct Fans
4. **Duct Fan Accessories** (Models B, BCS & DF)
   - **WC** - Motor Covers
   - **MCG** - Fan Guards
   - **FL** - Matching Flange

II. Exhaust Fans (Wall/Panel)

1. **"600 Series"** - Commercial Duty Belt Drive Exhaust Fans with Steel Propellers - Standard Duty
2. **"700 Series"** - Commercial Duty Belt Drive Exhaust Fans with Steel Propellers - Medium Duty
3. **"800 Series"** - Industrial Belt Drive Exhaust Fans with Steel Propellers - Heavy Duty
4. **"800X Series"** - Industrial Belt Drive Exhaust Fans with Cast Aluminum Propellers - Heavy Duty (Explosion Proof)
5. **"900 Series"** - Industrial Direct Drive Exhaust Fans with Cast Aluminum Propellers - Heavy Duty
6. **Exhaust Fan (Wall/Panel) Accessories** (Models "600, 700, 800, 800X & 900 Series")
   - **WSH** - Shutters - Automatic All-Aluminum
   - **FG** - Front Guards
   - **RBG** - Rear Guards (Shipped Unassembled)
   - **HDBX** - Fan & Shutter Mounting Box
   - **PKG** - Package (Includes Shutter, Rear Guard, and Mounting Box)

III. Roof Exhausters

1. **Model BRV** - Industrial Belt Drive Roof Exhausters - Motor Out of Air Stream
2. **Model BRV8** - Industrial Belt Drive Roof Exhausters with Steel Propellers - Motor In Air Stream
3. **Model AM** - Industrial Direct Drive Roof Exhausters with Cast Aluminum Propellers
4. **Model 1900B** - Industrial Belt Drive Hooded Roof Exhausters
5. **Roof Exhauster Accessories** (Models BRV, BRV8, AM & 1900B)
   - **3R** - Raintight NEMA 3R Non-Fused Disconnect Switch
   - **BD33** - Gravity 1900B Exhaust Shutter - Mounted in the Fan Box (Includes Shutter, Damper Tray & Mounting)
   - **3100** - Gravity 1900B Intake Shutter - Mounted in the Fan Box (Includes Shutter, Damper Tray & Mounting)
   - **FAC** - Flat Roof Curb

IV. Blowers

1. **Model ADB** - Industrial Direct Drive Cast Aluminum Low Pressure Blowers
2. **Model ADP** - Industrial Direct Drive Cast Aluminum High Pressure Blowers
3. **Blower Accessories** (Models ADB & ADP)
   - **IF** - Cast Aluminum Mounting Flange

V. Man and Product Coolers

1. **Model DA** - Industrial Direct Drive Man and Product Coolers - Cast Aluminum Propellers with Low Stand
2. **Man and Product Cooler Accessories** (Model DA)
   - **MS** - Medium Stand
   - **HS** - High Stand
   - **1Y** - 1 Way Swivel Yoke Mount
   - **2Y** - 2 Way Swivel Yoke Mount

Americraft MANUFACTURING CO. INC.
INDUSTRIAL VENTILATING & EXHAUST FANS

Industrial Tube Axial Belt Drive Duct Fans

Model B

FAN			MOTOR	Free	Capacity C.F.M.							GSA PRICE			
Model No.	Size	H.P.	RPM	Air	1/8" SP	1/4" SP	3/8" SP	1/2' SP	3/4" SP	1' SP	1-1/4"SP	TEFC-1PH (S)	TEFC-3PH (T)	EXP-1PH (SX)	EXP-3PH (TX)
B12-1/4	12"	1/4	1725	1444	1307	1033	638	380	-	-	-	$ 814.31	$ 805.77	$ 971.30	$ 975.04
B12-1/2	12"	1/2	3450	1875	1650	1400	1320	1250	1100	660	-	$ 827.66	$ 870.38	$ 1,003.87	$ 1,036.45
B12-3/4	12"	3/4	3450	2044	1960	1920	1820	1650	1500	1100	-	$ 894.41	$ 895.48	$ 1,081.30	$ 1,109.60
B18-1/2	18"	1/2	1725	3850	3500	3100	2500	2000	-	-	-	$ 937.66	$ 929.65	$ 1,136.83	$ 1,158.73
B18-1	18"	1	1725	4600	4375	4080	3600	3000	2100	1550	-	$ 1,062.08	$ 1,047.12	$ 1,262.85	$ 1,250.57
B24-1	24"	1	1725	7425	7000	6350	5850	5000	3300	1775	-	$ 1,122.95	$ 1,108.00	$ 1,323.72	$ 1,311.44
BPR24-1 1/2	24"	1 1/2	1725	8200	7900	7650	7280	6850	5500	-	-	$ 1,354.16	$ 1,298.09	$ 1,864.64	$ 1,707.65
B24-3	24"	3	1725	10500	9800	9500	9100	8700	7800	5000	3600	$ -	$ 1,383.00	$ -	$ 1,696.97
BPR27-1	27"	1	1725	9400	8675	8480	7950	7300	5200	-	-	$ 1,340.81	$ 1,325.86	$ 1,541.59	$ 1,529.30
BPR27-2	27"	2	1725	11500	11200	10700	10000	9300	8000	5200	-	$ 1,491.39	$ 1,394.74	$ 2,236.29	$ 1,817.65
BPR30-1 1/2	30"	1 1/2	1725	11100	10600	9700	8600	7500	3500	-	-	$ 1,483.92	$ 1,427.85	$ 1,994.40	$ 1,837.41
B30-3	30"	3	1725	13480	12982	12498	12042	11465	10380	9470	7500	$ -	$ 1,519.69	$ -	$ 1,833.67
B30-5	30"	5	1725	16440	15832	15242	14686	13982	12659	11550	9200	$ -	$ 1,581.63	$ -	$ 1,988.52
B34-3	34"	3	1725	17580	16750	15896	14600	14095	12000	9500	-	$ -	$ 1,711.39	$ -	$ 2,025.37
B34-5	34"	5	1725	20500	19800	19000	18325	17500	16000	14200	12250	$ -	$ 1,772.80	$ -	$ 2,179.69
BPR36-3	36"	3	1725	17500	16800	15900	14740	14100	12200	-	-	$ -	$ 1,788.28	$ -	$ 2,102.26
BPR36-5	36"	5	1725	20600	19950	19200	18500	17800	16020	14300	-	$ -	$ 1,847.02	$ -	$ 2,253.91
BPR42-3	42"	3	1725	23700	22100	20200	18960	16970	9950	3600	-	$ -	$ 2,001.34	$ -	$ 2,315.32
BPR42-5	42"	5	1725	26900	25600	24403	23450	22250	18400	13900	-	$ -	$ 2,141.77	$ -	$ 2,548.66

The GSA Price includes: Cast Aluminum Propellers, Continuous Weld, Belt Guard and Variable Pitch Pulley

Industrial Tube Axial Belt Drive Duct Fans

High Temperature and High Moisture

Model BCS

FAN			MOTOR	FREE	CAPACITY C.F.M.								GSA PRICE			
Model & HP	Size	H.P.	RPM	AIR	1/8" SP	1/4" SP	3/8" SP	1/2' SP	3/4" SP	1' SP	1-1/4"SP	1-1/2"SP	TEFC-1PH (S)	TEFC-3PH (T)	EXP-1PH (SX)	EXP-3PH (TX)
B12-1/2CS	12"	1/2	3450	1875	1650	1400	1320	1250	1100	660	-	-	$ 1,111.74	$ 1,154.45	$ 1,287.95	$ 1,320.52
B12-3/4CS	12"	3/4	3450	2044	1960	1920	1820	1650	1500	110	-	-	$ 1,163.00	$ 1,164.07	$ 1,349.89	$ 1,378.19
B18-1/2CS	18"	1/2	1725	3850	3500	3100	2500	2000	-	-	-	-	$ 1,208.39	$ 1,200.38	$ 1,407.56	$ 1,429.45
B18-1CS	18"	1	1725	4600	4375	4080	3600	3000	200	1550	-	-	$ 1,332.27	$ 1,317.32	$ 1,533.04	$ 1,520.76
BPR24-1CS	24"	1	1725	7425	7000	6350	5850	5000	300	1775	-	-	$ 1,484.45	$ 1,469.50	$ 1,685.23	$ 1,672.94
BPR24-1 1/2CS	24"	1 1/2	1725	8200	7900	7650	7280	6850	5500	-	-	-	$ 1,557.07	$ 1,501.00	$ 2,067.55	$ 1,910.56
B24-3CS	24"	3	1725	10500	9800	9500	9100	8700	7800	5000	3600	2000	$ -	$ 1,585.91	$ -	$ 1,899.88
BPR27-1CS	27"	1	1725	9400	8675	8480	7950	7300	5200	-	-	-	$ 1,584.84	$ 1,569.89	$ 1,785.61	$ 1,773.33
BPR27-2CS	27"	2	1725	11500	11200	10700	10000	9300	8000	5200	-	-	$ 1,741.29	$ 1,644.64	$ 2,486.19	$ 2,067.55
BPR30-1 1/2CS	30"	1 1/2	1725	11100	10600	9700	8600	7500	3500	-	-	-	$ 1,754.64	$ 1,698.57	$ 2,265.12	$ 2,108.13
B30-3CS	30"	3	1725	13480	12982	12498	129=042	11465	10380	9470	7500	-	$ -	$ 1,754.11	$ -	$ 2,068.09
B30-5CS	30"	5	1725	16440	15832	15242	14686	13982	12659	11550	9200	-	$ -	$ 1,812.85	$ -	$ 2,219.73
B34-3CS	34"	3	1725	17580	16750	15896	14600	14095	1200	9500	-	-	$ -	$ 1,950.61	$ -	$ 2,264.59
B34-5CS	34"	5	1725	20500	19800	19000	18325	17500	16000	14200	12250	-	$ -	$ 2,009.35	$ -	$ 2,416.24
BPR36-3CS	36"	3	1725	17500	16800	15900	14740	14100	12200	-	-	-	$ -	$ 2,017.89	$ -	$ 2,331.87
BPR36-5CS	36"	5	1725	20600	19950	19200	18500	17800	16020	14300	-	-	$ -	$ 2,076.63	$ -	$ 2,483.52
BPR42-3CS	42"	3	1725	23700	22100	20200	18960	16970	9950	3600	-	-	$ -	$ 2,214.39	$ -	$ 2,528.37
BPR42-5CS	42"	5	1725	26900	25600	24403	23450	22250	18400	13900	-	-	$ -	$ 2,358.57	$ -	$ 2,765.46
BPR42-7 1/2CS	42"	7 1/2	1725	30800	29600	28500	27400	26200	23500	20500	16500	-	$ -	$ 2,539.05	$ -	$ 3,388.07
BPR48-5CS	48"	5	1725	33000	31000	29400	27500	25670	20700	-	-	-	$ -	$ 2,983.85	$ -	$ 3,390.74
BPR48-7 1/2CS	48"	7 1/2	1725	37500	35900	34500	32800	31200	27700	23000	-	-	$ -	$ 3,154.72	$ -	$ 4,003.74
BPR60-5CS	60"	5	1725	45000	40800	36000	32150	26000	-	-	-	-	$ -	$ 4,453.89	$ -	$ 4,860.77
BPR60-7 1/2CS	60"	7 1/2	1725	51000	49500	47250	43500	39375	30750	21375	16875	-	$ -	$ 4,595.39	$ -	$ 5,444.41
BPR60-10CS	60"	10	1725	54000	51900	49000	46300	43200	36000	27000	-	-	$ -	$ 4,740.63	$ -	$ 5,613.68

The GSA Price includes: Cast Aluminum Propellers, Continuous Weld, Belt Guard and Variable Pitch Pulley

Americraft MANUFACTURING CO. INC.
INDUSTRIAL VENTILATING & EXHAUST FANS

Industrial Tube Axial Direct Drive Duct Fans Model DF

FAN			MOTOR	Free	Capacity C.F.M.							GSA PRICE			
Model No.	Size	H.P.	RPM	Air	1/8" SP	1/4" SP	3/8" SP	1/2' SP	3/4" SP	1' SP	1-1/4"SP	TEFC-1PH (S)	TEFC-3PH (T)	EXP-1PH (SX)	EXP-3PH (TX)
DF12-1/4	12"	1/4	1725	1180	930	520	-	-	-	-	-	$ 507.28	$ 498.73	$ 664.26	$ 668.00
DF12-1/2	12"	1/2	3450	1875	1650	1400	1320	1250	1100	660	-	$ 520.63	$ 563.34	$ 696.84	$ 729.41
DF12-3/4	12"	3/4	3450	2044	1960	1920	1820	1650	1500	1100	-	$ 550.53	$ 551.60	$ 737.42	$ 765.72
DF18-1/4	18"	1/4	1725	3450	3050	2500	1200	-	-	-	-	$ 592.18	$ 583.63	$ 749.17	$ 752.90
DF18-1/2	18"	1/2	1725	4150	3850	3150	2800	1700	-	-	-	$ 648.78	$ 640.77	$ 847.95	$ 869.85
DF18-1	18"	1	1725	4600	4375	4080	3600	3000	2100	1550	-	$ 730.48	$ 715.53	$ 931.25	$ 918.97
DF24-1/4	24"	1/4	1725	5200	4200	2820	1050	-	-	-	-	$ 661.06	$ 652.52	$ 818.05	$ 821.79
DF24-1/2	24"	1/2	1725	6510	5880	5200	4150	3100	1800	-	-	$ 729.41	$ 721.40	$ 928.58	$ 950.48
DF24-1	24"	1	1725	7425	7000	6350	5850	5000	3300	1775	-	$ 807.37	$ 792.42	$ 1,008.14	$ 995.86
DF24-3	24"	3	1725	10500	9800	9500	9100	8700	7800	5000	3600	$ -	$ 909.89	$ -	$ 1,223.87
DF30-1/2	30"	1/2	1725	8980	7650	6300	5400	4350	2300	-	-	$ 836.20	$ 828.20	$ 1,035.38	$ 1,057.27
DFL30-3/4	30"	3/4	1140	10440	9750	8750	7640	6000	-	-	-	$ 1,049.26	$ 941.40	$ 1,256.44	$ 1,229.21
DF30-3	30"	3	1725	16000	15350	14700	13850	12900	10200	8000	6000	$ -	$ 995.86	$ -	$ 1,309.84

The List Price includes: Cast Aluminum Propellers and Continuous Weld

Duct Fan Accessories Models B, BCS & DF

Motor Covers

Model No & Motor	GSA PRICE
WC - Motor Cover 1/2-2 HP	$ 151.65
WC - Motor Cover 3-7 1/2 HP	$ 187.43
WC- Motor Cover 10+ HP	$ 192.76

Fan Guards

Model No. & Fan Size	GSA PRICE
MCG - Fan Guard 12"-18"	$ 43.79
MCG - Fan Guard 24"-30"	$ 55.53
MCG - Fan Guard 34"-42"	$ 89.71

Matching Flange

Model No. & Fan Size	GSA PRICE
FL - Match Flange 12"-18"	$ 29.37
FL - Match Flange 24"-30"	$ 49.13
FL - Match Flange 34"-42"	$ 66.21

Americraft MANUFACTURING CO. INC.
INDUSTRIAL VENTILATING & EXHAUST FANS

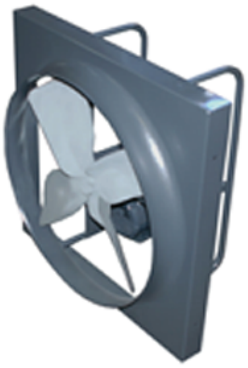

Commercial Duty Belt Drive Exhaust Fans

Standard Duty

600 Series

FAN			MOTOR	Capacity C.F.M.					GSA PRICE	
Model No.	Size	H.P.	RPM	0" SP	1/8" SP	1/4" SP	1/2" SP	3/4" SP	TEFC-1PH (S)	TEFC-3PH (T)
624-1/2	24"	1/2	925	6200	5700	5000	4000	2600	$ 661.60	$ 653.59
624-1	24"	1	1175	7800	7400	6900	5700	3500	$ 726.21	$ 711.25
630-1/2	30"	1/2	625	8500	7100	4400	2700	1300	$ 691.50	$ 683.49
630-1	30"	1	825	11000	10400	9300	5500	2800	$ 766.25	$ 751.30
636-3/4	36"	3/4	575	11900	10500	8500	5500	4000	$ 776.93	$ 765.72
636-1	36"	1	750	13100	11800	10200	6900	5000	$ 824.99	$ 810.04
636-2	36"	2	830	16500	15500	14500	11000	7000	$ 1,024.70	$ 928.05
642-1	42"	1	490	15400	13100	10400	6400	4600	$ 932.85	$ 917.90
648-1	48"	1	400	19100	16000	10900	6400	4000	$ 1,017.22	$ 1,002.27

Commercial Duty Belt Drive Exhaust Fans

Medium Duty

700 Series

FAN			MOTOR	Capacity C.F.M.					GSA NET PRICE WITH IFF	
Model No.	Size	H.P.	RPM	0" SP	1/8" SP	1/4" SP	1/2" SP	3/4" SP	TEFC-1PH (S)	TEFC-3PH (T)
742-2	42"	2	620	19400	17500	15600	9700	6000	$ 1,171.01	$ 1,074.36
742-3	42"	3	700	22000	20500	19000	15000	8000	$ -	$ 1,113.87
748-2	48"	2	520	24000	22000	18000	12000	7500	$ 1,291.69	$ 1,195.04
748-3	48"	3	590	27500	25000	22500	16000	9000	$ -	$ 1,232.95
748-5	48"	5	660	30500	28500	26000	21000	1300	$ -	$ 1,291.69
760-3	60"	3	370	35000	31000	23000	11000	-	$ -	$ 1,694.84
760-5	60"	5	420	39000	35000	29000	18000	-	$ -	$ 1,758.91

Americraft MANUFACTURING CO. INC.
INDUSTRIAL VENTILATING & EXHAUST FANS

Industrial Belt Drive Exhaust Fans

Heavy Duty

800 Series

FAN			MOTOR	Free	CAPACITY C.F.M.				GSA PRICE	
Model No.	Size	H.P.	RPM	Air	1/8" SP	1/4" SP	1/2" SP	3/4" SP	TEFC-1PH (S)	TEFC-3PH (T)
824-1/2	24"	1/2	1725	6219	5716	5061	4043	2600	$ 765.72	$ 757.71
824-1	24"	1	1725	7180	6696	6271	5600	4464	$ 876.79	$ 861.84
830-1/2	30"	1/2	1725	8507	7170	4486	2724	1373	$ 804.70	$ 796.69
830-1	30"	1	1725	10668	9959	8626	6828	5184	$ 925.91	$ 910.96
836-1/2	36"	1/2	1725	10500	8821	5985	3642	2084	$ 932.32	$ 924.31
836-1	36"	1	1725	13174	11932	10299	7913	5729	$ 1,006.01	$ 991.06
836-1 1/2	36"	1 1/2	1725	13660	12012	9579	7240	5000	$ 1,132.03	$ 1,075.96
842-3/4	42"	3/4	1725	14040	11530	7633	4847	3311	$ 996.40	$ 985.18
842-2	42"	2	1725	20653	19128	17503	15264	11319	$ 1,270.33	$ 1,173.68
848-3/4	48"	3/4	1725	17339	13700	7389	4283	2244	$ 1,216.40	$ 1,205.18
848-3	48"	3	1725	28150	25683	23615	20820	16930	$ -	$ 1,449.21
848-5	48"	5	1725	33160	30900	29290	27380	25000	$ -	$ 1,515.42
860-2	60"	2	1725	32200	26710	17924	13118	9380	$ 1,914.30	$ 1,817.65
860-3	60"	3	1725	37183	32356	25324	18705	15013	$ -	$ 1,873.72
860-5	60"	5	1725	44600	41232	35819	29000	23237	$ -	$ 1,935.13

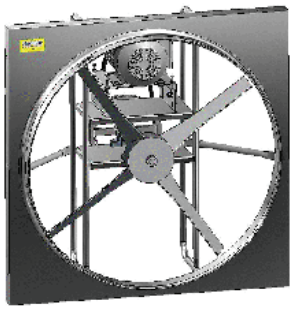

Industrial Belt Drive Exhaust Fans

Explosion Proof

800X Series

FAN			MOTOR	Free	CAPACITY C.F.M.				GSA PRICE	
Model No.	Size	H.P.	RPM	Air	1/8" SP	1/4" SP	1/2" SP	3/4" SP	EXP-1PH (SX)	EXP-3PH (TX)
824-1/2X	24"	1/2	1725	6219	5716	5061	4043	2600	$ 1,121.35	$ 1,143.24
824-1X	24"	1	1725	7180	6696	6271	5600	4464	$ 1,201.98	$ 1,189.70
830-1/2X	30"	1/2	1725	8507	7170	4486	2724	1373	$ 1,221.20	$ 1,243.09
830-1X	30"	1	1725	10668	9959	8626	6828	5184	$ 1,315.18	$ 1,302.90
836-1/2X	36"	1/2	1725	10500	8821	5985	3642	2084	$ 1,346.68	$ 1,368.58
836-1X	36"	1	1725	13174	11932	10299	7913	5729	$ 1,421.98	$ 1,409.69
836-1 1/2X	36"	1	1725	13660	12012	9579	7240	5000	$ 1,838.48	$ 1,681.49
842-3/4X	42"	3/4	1725	14040	11530	7633	4847	3311	$ 1,504.21	$ 1,508.48
842-2X	42"	2	1725	20653	19128	17503	15264	11319	$ 2,248.57	$ 1,829.93
848-3/4X	48"	3/4	1725	17339	13700	7389	4283	2244	$ 1,807.51	$ 1,811.78
848-3X	48"	3	1725	28150	25683	23615	20820	16930	$ -	$ 2,054.20
848-5X	48"	5	1725	33160	30900	29290	27380	25000	$ -	$ 2,209.05
860-2X	60"	2	1725	32200	26710	17924	13118	9380	$ 3,136.57	$ 2,717.93
860-3X	60"	3	1725	37183	32356	25324	18705	15013	$ -	$ 2,677.35
860-5X	60"	5	1725	44600	41232	35819	29000	23237	$ -	$ 2,832.20

Americraft MANUFACTURING CO. INC.
INDUSTRIAL VENTILATING & EXHAUST FANS

Industrial Direct Drive Exhaust Fans

Heavy Duty

900 Series

FAN			MOTOR	FREE	CAPACITY C.F.M.								GSA PRICE			
Model No.	Size	H.P.	RPM	AIR	1/8" SP	1/4" SP	3/8" SP	1/2' SP	3/4" SP	1' SP	1-1/4"SP	1-1/2"SP	TEFC-1PH (S	TEFC-3PH (T)	EXP-1PH (SX)	EXP-3PH (TX)
912-1/4	12"	1/4	1725	1180	930	520	-	-	-	-	-	-	$ 452.81	$ 444.27	$ 609.80	$ 613.54
916-1/4	16"	1/4	1725	2800	2400	2000	1400	700	-	-	-	-	$ 551.06	$ 542.52	$ 708.05	$ 711.79
918-1/2	18"	1/2	1725	4150	3850	3150	2800	1700	-	-	-	-	$ 615.14	$ 607.13	$ 814.31	$ 836.20
920-1/2	20"	1/2	1725	4800	4450	3950	3340	2500	-	-	-	-	$ 608.73	$ 600.72	$ 807.90	$ 829.80
920-1	20"	1	1725	6900	6600	6200	5900	5500	3700	850	-	-	$ 682.95	$ 668.00	$ 883.73	$ 871.45
924-1/4	24"	1/4	1725	5200	4200	2820	1050	-	-	-	-	-	$ 593.78	$ 585.24	$ 750.77	$ 754.51
924-1/2	24"	1/2	1725	6510	5880	5200	41503100	1800	-	-	-	-	$ 661.60	$ 653.59	$ 860.77	$ 882.66
924-1	24"	1	1725	7425	7000	6350	5850	5000	3300	1775	-	-	$ 738.49	$ 723.54	$ 939.26	$ 926.98
924-3	24"	3	1725	10500	9800	9500	9100	8700	7800	500	3600	-	$ -	$ 845.28	$ -	$ 1,159.26
930-1/2	30"	1/2	1725	8980	7650	6300	5400	4350	2300	-	-	-	$ 733.15	$ 725.14	$ 932.32	$ 954.21
L930-3/4	30"	3/4	1140	10440	9750	8750	7640	6000	-	-	-	-	$ 945.67	$ 837.81	$ 1,152.85	$ 1,125.62
930-3	30"	3	1725	16000	15350	14700	13850	12900	10200	8000	6000	-	$ -	$ 889.60	$ -	$ 1,203.58
L936-2	36"	2	1140	17620	16500	15200	13620	12300	8500	-	-	-	$ -	$ 1,132.56	$ -	$ 1,564.01
L936-3	36"	3	1140	20500	19500	18500	17100	15850	11600	6500	-	-	$ -	$ 1,334.40	$ -	$ 1,770.66
936-5	36"	5	1725	23000	22150	21100	20200	1900	18100	16400	14500	6000	$ -	$ 1,139.50	$ -	$ 1,546.39
L942-3	42"	3	1140	24500	23150	23000	22000	19650	1400	10000	-	-	$ -	$ 1,385.67	$ -	$ 1,821.92
L942-5	42"	5	1140	28970	27960	26840	25700	24200	19500	13800	2000	-	$ -	$ 1,484.45	$ -	$ 2,115.07
L948-3	48"	3	1140	28600	26500	24400	22000	20000	15900	11000	-	-	$ -	$ 1,649.98	$ -	$ 2,086.24
L948-5	48"	5	1140	32000	30493	28900	27173	25432	21054	14985	7100	-	$ -	$ 1,779.20	$ -	$ 2,409.83
LL948-5	48"	5	870	33000	31500	29750	27650	25300	18000	-	-	-	$ -	$ 2,295.56	$ -	$ -
L960-5	60"	5	1140	45000	41000	37000	33500	28500	16000	2500	-	-	$ -	$ 2,273.13	$ -	$ 2,903.76
LL960-5	60"	5	870	45200	41500	37000	33000	26000	14000	-	-	-	$ -	$ 2,630.89	$ -	$ -
LL960-10	60"	10	870	57200	54400	51000	48500	45000	38000	29500	-	-	$ -	$ 3,460.69	$ -	$ -

Exhaust Fan Accessories

600, 700, 800, 800X, 900 Series

Shutters - Automatic All-Aluminum

Model No. & Fan Size	GSA PRICE
WSH - Shutter 12"	$ 56.60
WSH - Shutter 16"	$ 63.54
WSH - Shutter 18"	$ 69.95
WSH - Shutter 20"	$ 77.43
WSH - Shutter 24"	$ 103.59
WSH - Shutter 30"	$ 121.21
WSH - Shutter 36"	$ 167.67
WSH - Shutter 42"	$ 252.57
WSH - Shutter 48"	$ 296.36
WSH - Shutter 54"	$ 338.01
WSH - Shutter 60"	$ 380.19

Front Guards

Model No. & Fan Size	GSA PRICE
FG - Front Guard 12"	$ 108.40
FG - Front Guard 16"	$ 113.74
FG - Front Guard 18"	$ 116.41
FG - Front Guard 20"	$ 118.01
FG - Front Guard 24"	$ 121.75
FG - Front Guard 30"	$ 184.76
FG - Front Guard 36"	$ 191.16
FG - Front Guard 42"	$ 211.99
FG - Front Guard 48"	$ 229.08
FG - Front Guard 54"	$ 345.48
FG - Front Guard 60"	$ 359.37

Rear Guards

Model No. & Fan Size	GSA NET PRICE WITH IFF
RBG - Rear Guard 12"	$ 213.59
RBG - Rear Guard 16"	$ 223.20
RBG - Rear Guard 18"	$ 225.87
RBG - Rear Guard 20"	$ 238.69
RBG - Rear Guard 24"	$ 273.93
RBG - Rear Guard 30"	$ 289.41
RBG - Rear Guard 36"	$ 341.74
RBG - Rear Guard 42"	$ 372.18
RBG - Rear Guard 48"	$ 429.85
RBG - Rear Guard 54"	$ 643.97
RBG - Rear Guard 60"	$ 663.20

Fan & Shutter Mounting Box

Model No. & Fan Size	GSA NET PRICE WITH IFF
HDBX - Mounting Box 12"	$ 117.47
HDBX - Mounting Box 16"	$ 122.81
HDBX - Mounting Box 18"	$ 162.33
HDBX - Mounting Box 20"	$ 165.00
HDBX - Mounting Box 24"	$ 244.56
HDBX - Mounting Box 30"	$ 256.31
HDBX - Mounting Box 36"	$ 322.52
HDBX - Mounting Box 42"	$ 366.84
HDBX - Mounting Box 48"	$ 461.35
HDBX - Mounting Box 54"	$ 670.67
HDBX - Mounting Box 60"	$ 705.38

Package (Shutter, Rear Guard &Mounting Box)

Model No. & Fan Size	GSA NET PRICE WITH IFF
PKG - Package 12"	$ 354.03
PKG - Package 16"	$ 378.59
PKG - Package 18"	$ 426.65
PKG - Package 20"	$ 442.13
PKG - Package 24"	$ 566.55
PKG - Package 30"	$ 610.33
PKG - Package 36"	$ 795.09
PKG - Package 42"	$ 913.63
PKG - Package 48"	$ 1,089.31
PKG - Package 54"	$ 1,544.26
PKG - Package 60"	$ 1,636.63

Model PKG

Americraft MANUFACTURING CO. INC.
INDUSTRIAL VENTILATING & EXHAUST FANS

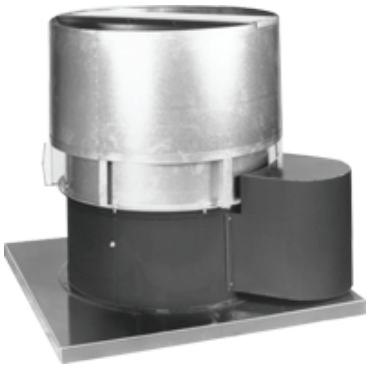

Industrial Belt Drive Roof Exhausters

Motor Out of Air Stream

Model BRV

FAN			MOTOR	FREE	CAPACITY C.F.M.								GSA PRICE			
Model No.	Size	H.P.	RPM	AIR	1/8" SP	1/4" SP	3/8" SP	1/2' SP	3/4" SP	1' SP	1-1/4"SP	1-1/2"SP	TEFC-1PH (S)	TEFC-3PH (T)	EXP-1PH (SX)	EXP-3PH (TX)
BRV18-1/2	18"	1/2	1725	3850	3500	3100	2500	2000	-	-	-	-	$ 1,834.74	$ 1,877.46	$ 2,010.95	$ 2,043.52
BRV18-1	18"	1	1725	4600	4375	4080	3600	3000	2100	1550	-	-	$ 1,939.40	$ 1,928.72	$ 2,104.40	$ 2,157.79
BRV24-1	24"	1	1725	7425	7000	6350	5850	5000	3300	1775	-	-	$ 2,093.72	$ 2,078.76	$ 2,294.49	$ 2,282.21
BRV24-3	24"	3	1725	10500	9800	9500	9100	8700	7800	5000	3600	-	$ -	$ 2,436.53	$ -	$ 2,750.51
BRV30-1	30"	1	1725	9897	8970	7980	6050	4120	-	-	-	-	$ 2,575.90	$ 2,560.94	$ 2,776.67	$ 2,764.39
BRV30-3	30"	3	1725	13480	12982	12498	12042	11465	10380	9470	7500	-	$ -	$ 2,702.98	$ -	$ 3,016.96
BRV30-5	30"	5	1725	16440	15832	15242	14686	13982	12659	11550	9200	-	$ -	$ 2,765.46	$ -	$ 3,172.35
BRV34-3	34"	3	1725	17580	16750	15896	14600	14095	12000	9500	-	-	$ -	$ 3,058.61	$ -	$ 3,372.59
BPRRV36-3	36"	3	1725	17500	16800	15900	14740	14100	12200	-	-	-	$ -	$ 3,062.88	$ -	$ 3,376.86
BPRRV36-5	36"	5	1725	20600	19950	19200	18500	17800	16020	14300	-	-	$ -	$ 3,121.62	$ -	$ 3,528.51
BPRRV42-3	42"	3	1725	23700	22100	20200	18960	16970	9950	3600	-	-	$ -	$ 3,511.42	$ -	$ 3,825.40
BPRRV42-5	42"	5	1725	26900	25600	24403	23450	22250	18400	13900	-	-	$ -	$ 3,628.89	$ -	$ 4,035.78
BPRRV42-7 1/2CS	42"	7 1/2	1725	30800	29600	28500	27400	26200	23500	20500	16500	-	$ -	$ 4,048.06	$ -	$ 4,897.08
BPRRV48-3CS	48"	3	1725	33000	31000	29400	27500	25670	20700	-	-	-	$ -	$ 4,560.15	$ -	$ 4,874.12
BPRRV48-7 1/2CS	48"	7 1/2	1725	37500	35900	34500	32800	31200	27700	23000	-	-	$ -	$ 4,788.69	$ -	$ 5,637.71
BRV60-5CS	60"	5	1725	45000	40800	36000	32150	26000	-	-	-	-	$ -	$ 6,706.73	$ -	$ 7,113.61
BRV60-10CS	60"	10	1725	54000	51900	49000	46300	43200	36000	27000	-	-	$ -	$ 6,993.47	$ -	$ 7,866.52

Industrial Belt Drive Roof Exhausters

with Steel Propellers

Motor in Air Stream

Model BRV8

FAN			MOTOR	FREE	CAPACITY C.F.M.				GSA PRICE	
Model No.	Size	H.P.	RPM	AIR	1/8" SP	1/4" SP	3/8" SP	1/2' SP	TEFC-1PH (S)	TEFC-3PH (T)
BRV824-1/2	24"	1/2	1725	6219	5716	5661	4043	2600	$ 1,511.15	$ 1,503.14
BRV830-3/4	30"	3/4	1725	10235	9192	7657	5108	3833	$ 1,638.24	$ 1,627.02
BRV830-1	30"	1	1725	10668	9959	8626	6828	5184	$ 1,725.27	$ 1,710.32
BRV836-3/4	36"	3/4	1725	11985	10583	8563	5545	4017	$ 1,968.23	$ 1,957.02
BRV836-1 1/2	36"	1 1/2	1725	13660	12012	9579	7240	5000	$ 2,142.84	$ 2,086.77
BRV842-1	42"	1	1725	15429	13194	10438	6414	4668	$ 2,243.76	$ 2,228.81
BRV842-2	42"	2	1725	20653	19128	17503	15264	11319	$ 2,454.68	$ 2,358.03
BRV848-1 1/2	48"	1 1/2	1725	21731	19010	14991	10950	7081	$ 2,675.75	$ 2,619.68
BRV848-3	48"	3	1725	28150	25683	23615	20820	16930	$ -	$ 2,786.82
BRV848-5	48"	5	1725	33160	30900	29290	27380	25000	$ -	$ 2,878.13
BRV860-3	60"	3	1725	37183	32356	25324	18705	15013	$ -	$ 3,939.13
BRV860-5	60"	5	1725	44600	41232	35819	29000	23237	$ -	$ 3,997.87

Americraft MANUFACTURING CO. INC.
INDUSTRIAL VENTILATING & EXHAUST FANS

Industrial Direct Drive Roof Exhausters Model AM

Cast Aluminum Propellers

FAN			MOTOR	Free	Capacity C.F.M.							GSA PRICE			
Model No.	Size	H.P.	RPM	Air	1/8" SP	1/4" SP	3/8" SP	1/2' SP	3/4" SP	1' SP	1-1/4"SP	TEFC-1PH (S)	TEFC-3PH (T)	EXP-1PH (SX)	EXP-3PH (TX)
AM18-1/2	18"	1/2	1725	4133	3938	3724	3455	3132	1939	-	-	$ 1,300.76	$ 1,292.75	$ 1,499.94	$ 1,521.83
AM18-1	18"	1	1725	4600	4375	4080	3600	3000	2100	1550	-	$ 1,381.93	$ 1,366.98	$ 1,582.70	$ 1,570.42
AM24-1	24"	1	1725	7425	7000	6350	5850	5000	3300	1775	-	$ 1,507.41	$ 1,492.46	$ 1,708.19	$ 1,695.90
AM24-3	24"	3	1725	10500	9800	9500	9100	8700	7800	5000	3600	$ -	$ 1,613.14	$ -	$ 1,927.12
AML30-3/4	30"	3/4	1140	10440	9750	8750	7640	6000	-	-	-	$ 1,762.65	$ 1,654.79	$ 1,969.83	$ 1,942.60
AML30-2	30"	2	1140	14000	13750	12900	11850	10450	2500	-	-	$ -	$ 1,804.84	$ -	$ 2,236.29
AM30-5	30"	5	1725	17750	17500	17150	16700	16200	15100	13750	12000	$ -	$ 1,808.57	$ -	$ 2,215.46
AML36-2	36"	2	1140	17620	16500	15200	13620	12300	8500	-	-	$ -	$ 2,124.15	$ -	$ 2,555.60
AML36-5	36"	5	1140	22600	21700	20500	19700	19000	14800	-	-	$ -	$ 2,178.08	$ -	$ 2,584.97
AML42-2	42"	2	1140	17964	17277	15326	13990	12351	7600	-	-	$ -	$ 2,377.26	$ -	$ 2,808.71
AML42-5	42"	5	1140	24500	23100	21900	20500	18600	12700	9100	-	$ -	$ 2,423.71	$ -	$ 2,830.60
AML48-3	48"	3	1140	28600	26500	24400	22000	20000	15900	11000	-	$ -	$ 2,959.29	$ -	$ 3,395.55
AML48-7 1/2	48"	7 1/2	1140	35654	33411	31857	30219	28021	22628	15907	-	$ -	$ 3,481.52	$ -	$ 3,719.14
AML48-10	48"	10	1140	39000	37300	35600	33600	32000	28000	17000	-	$ -	$ 3,561.61	$ -	$ 3,961.03
AMLL60-5	60"	5	870	45200	41500	37000	33000	26000	14000	-	-	$ -	$ 4,661.60	$ -	$ -
AMLL60-7 1/2	60"	7 1/2	870	47000	45500	43600	41000	38700	33000	24000	-	$ -	$ 5,019.90	$ -	$ -

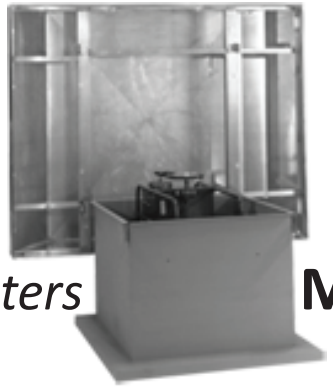

Industrial Belt Drive Hooded Roof Exhausters Model 1900B

FAN			MOTOR	Free	CAPACITY C.F.M.			GSA PRICE	
Model No.	Size	H.P.	RPM	Air	1/8" SP	1/4" SP	3/8" SP	TEFC-1PH (S)	TEFC-3PH (T)
1924B-1/2	24"	1/2	1725	5716	5061	4043	2600	$ 1,729.55	$ 1,721.54
1924B-1	24"	1	1725	6696	6271	5600	4464	$ 1,836.34	$ 1,821.39
1930B-1/2	30"	1/2	1725	7170	4486	2724	1373	$ 1,938.86	$ 1,930.85
1930B-1	30"	1	1725	9959	8626	6828	5184	$ 2,057.41	$ 2,042.45
1936B-3/4	36"	3/4	1725	10583	8563	5545	4017	$ 2,380.46	$ 2,369.25
1936B-1	36"	1	1725	11932	10299	7913	5729	$ 2,428.52	$ 2,413.57
1936B-2	36"	2	1725	15376	14088	11942	9691	$ 2,662.40	$ 2,565.75
1942B-1	42"	1	1725	13194	10438	6414	4668	$ 2,698.71	$ 2,683.76
1942B-2	42"	2	1725	19128	17503	15264	11319	$ 2,897.88	$ 2,801.23
1942B-3	42"	3	1725	22296	20984	19406	17290	$ 2,458.42	$ 2,839.15
1948B-1	48"	1	1725	16078	10908	6378	4037	$ 3,208.12	$ 3,193.17
1948B-2	48"	2	1725	21943	19080	15532	10125	$ 3,421.18	$ 3,324.53
1948B-3	48"	3	1725	25683	23615	20820	16930	$ 2,985.45	$ 3,366.18
1948B-5	48"	5	1725	30900	29290	27380	25000	$ 2,985.45	$ 3,424.92
1960B-3	60"	3	1725	32356	25324	18705	15013	$ 3,823.26	$ 4,203.99
1960B-5	60"	5	1725	41232	35819	29000	23237	$ 3,825.93	$ 4,265.39

Americraft MANUFACTURING CO. INC.
INDUSTRIAL VENTILATING & EXHAUST FANS

Roof Exhauster Accessories Models BRV, BRV8, AM & 1900B

Raintight NEMA 3R Non-Fused Disconnect Switch

Model No. & Motor	GSA PRICE
3R - Disc Switch 1PH 115V	$ 273.93
3R - Disc Switch 3PH 230V	$ 273.93
3R - Disc Switch 3PH 460V	$ 273.93

Flat Roof Curb

Fan Size	GSA PRICE
FRC-Flat Roof Curb-18"	$ 139.37
FRC-Flat Roof Curb-24"	$ 165.53
FRC-Flat Roof Curb-30"	$ 185.29
FRC-Flat Roof Curb-36"	$ 218.93
FRC-Flat Roof Curb-42"	$ 225.34
FRC-Flat Roof Curb-48"	$ 291.55
FRC-Flat Roof Curb-54"	$ 315.05
FRC-Flat Roof Curb-60"	$ 417.57

Gravity 1900B Exhaust Shutter

Fan Size	GSA PRICE
BD33-EXHAUST SHUTTER-24"	$ 287.81
BD33-EXHAUST SHUTTER-30"	$ 315.58
BD33-EXHAUST SHUTTER-36"	$ 420.24
BD33-EXHAUST SHUTTER-42"	$ 492.32
BD33-EXHAUST SHUTTER-48"	$ 599.12
BD33-EXHAUST SHUTTER-54"	$ 692.57
BD33-EXHAUST SHUTTER-60"	$ 805.23

Gravity 1900B Intake Shutter

Fan Size	GSA PRICE
3100-INTAKE SHUTTER-24"	$ 347.62
3100-INTAKE SHUTTER-30"	$ 415.43
3100-INTAKE SHUTTER-36"	$ 728.34
3100-INTAKE SHUTTER-42"	$ 860.77
3100-INTAKE SHUTTER-48"	$ 1,122.42
3100-INTAKE SHUTTER-54"	$ 1,431.59
3100-INTAKE SHUTTER-60"	$ 1,649.45

Americraft MANUFACTURING CO. INC.
INDUSTRIAL VENTILATING & EXHAUST FANS

Model ADB

Industrial Direct Drive Cast Aluminum Low Pressure Blowers

FAN			MOTOR	CAPACITY C.F.M. & BHP										GSA PRICE			
Model No.	Wheel Dia.	H.P.	RPM	1/4"	1/2'	3/4"	1"	1 1/2"	2"	2 1/2"	3"	3 1/2"	4"	TEFC-1PH (S)	TEFC-3PH (T)	EXP-1PH (SX)	EXP-3PH (TX)
ADB4-1/3	4-3/4"	1/3	1725	210 & .035	135 & .023	-	-	-	-	-	-	-	-	$ 497.13	$ 477.37	$ 719.80	$ 688.29
HADB4-1/3	4-3/4"	1/3	3450	500 & .38	470 & .34	440 & .32	420 & .30	360 & .26	260 & .16	-	-	-	-	$ 484.85	$ 484.85	$ 583.10	$ 678.68
LADB6-1/4	6-1/4"	1/4	1150	248 & .06	96 & .02	-	-	-	-	-	-	-	-	$ 586.84	$ 572.96	$ 753.44	$ 803.63
ADB6-1/3	6-1/4"	1/3	1725	440 & .18	370 & .14	300 & .11	-	-	-	-	-	-	-	$ 526.50	$ 506.74	$ 749.17	$ 717.66
HADB6-1	6-1/4"	1	3450	900 & 1.45	870 & 1.4	850 & 1.35	820 & 1.30	780 & 1.20	730 & 1.15	660 & 1.00	580 & .90	470 & .80	390 & .70	$ 564.95	$ 554.27	$ 729.94	$ 783.34
HADB6-1 1/2	6-1/4"	1 1/2	3450											$ 662.13	$ 708.58	$ 1,081.30	$ 969.16
LADB8-1/4	8-1/2"	1/4	1150	860 & .26	720 & .18	600 & .15	-	-	-	-	-	-	-	$ 753.97	$ 740.09	$ 920.57	$ 970.77
ADB8-3/4	8-1/2"	3/4	1725	1550 & 1.15	1500 & 1.05	1490 & 1.00	1400 & .90	1200 & .85	950 & .70	-	-	-	-	$ 709.12	$ 697.91	$ 939.26	$ 943.53
ADB8-1	8-1/2"	1	1725											$ 757.18	$ 742.23	$ 957.95	$ 945.67
ADB8-1 1/2	8-1/2"	1 1/2	1725											$ 828.20	$ 772.13	$ 1,338.68	$ 1,181.69

Model ADP

Industrial Direct Drive Cast Aluminum High Pressure Blowers

FAN			MOTOR	CAPACITY C.F.M & BHP						GSA PRICE			
Model No.	Wheel Dia.	H.P.	RPM	1"	3"	5"	7"	9"	11"	TEFC-1PH (S)	TEFC-3PH (T)	EXP-1PH (SX)	EXP-3PH (TX)
HADP8-1/3	8 x 2 3/4	1/3	3450	345 & .37	242 & .31	-	-	-	-	$ 577.23	$ 577.23	$ 675.48	$ 771.06
HADP9-1/2	8 x 2 3/4	1/2	3450	380 & .39	275 & .30	-	-	-	-	$ 620.48	$ 663.20	$ 796.69	$ 829.26
HADP9-3/4	9 x 2 7/8	3/4	3450	480 & .62	380 & .57	210 & .42	-	-	-	$ 641.30	$ 642.37	$ 828.20	$ 856.50
HADP9-1	10 1/2 x 2 7/8	1	3450	575 & .80	495 & .72	400 & .54	270 & .41	-	-	$ 698.97	$ 688.29	$ 863.97	$ 917.37
HADP10-3/4	9 x 2 7/8	3/4	3450	571 & .73	400 & .60	91 & .37	-	-	-	$ 690.96	$ 692.03	$ 877.85	$ 906.16
HADP10-1 1/2	11 x 2 3/4	1 1/2	3450	840 & 1.50	700 & 1.35	590 & 1.26	460 & 1.05	-	-	$ 861.30	$ 907.76	$ 1,280.47	$ 1,168.34
HADP12-1	11 x 3BC	1	3450	865 & 1.07	710 & .99	535 & .87	160 & .55	-	-	$ 836.20	$ 825.53	$ 1,001.20	$ 1,054.60
HADP12-1 1/2	10 1/2 x 2 7/8	1 1/2	3450	1055 & 1.62	890 & 1.42	670 & 1.20	360 & .77	-	-	$ 946.20	$ 992.66	$ 1,365.37	$ 1,253.24
HADP12-2	11 x 2 3/4	2	3450	1150 & 1.91	975 & 1.72	750 & 1.40	475 & 1.05	-	-	$ 1,003.87	$ 1,007.61	$ 1,326.93	$ 1,235.62
HADP12-3	11 1/2 x 2 3/4	3	3450	1245 & 2.48	1086 & 2.20	890 & 2.00	630 & 1.53	-	-	$ 1,236.69	$ 1,198.24	$ 1,826.19	$ 1,521.83
HADP12-5	14 x 3	5	3450	1600 & 4.21	1550 & 4.00	1400 & 3.78	1285 & 3.63	1125 & 3.40	945 & 2.81	$ 1,433.19	$ 1,310.37	$ -	$ 1,742.89
HADP14-3	12 1/4 x 3	3	3450	1575 & 3.40	1405 & 3.11	1250 & 2.71	1000 & 2.21	685 & 1.90	-	$ 1,301.30	$ 1,262.85	$ 1,890.81	$ 1,586.44
HADP14-5	14 x 3	5	3450	1875 & 4.98	1710 & 4.60	1550 & 4.15	1400 & 3.80	1203 & 3.50	1045 & 2.98	$ 1,546.93	$ 1,424.11	$ -	$ 1,856.63
HADP15-5	14 x 3	5	3450	2300 & 5.30	2100 & 4.95	1900 & 4.50	1678 & 4.10	1410 & 3.60	1170 & 3.21	$ 1,674.01	$ 1,551.20	$ -	$ 1,983.72
HADP15-7 1/2	15 1/2 x 5BC	7 1/2	3450	2360 & 6.50	2210 & 6.00	1950 & 5.32	1800 & 4.65	1595 & 4.10	1300 & 3.70	$ -	$ 1,869.45	$ -	$ 2,292.35
HADP15-10	15 1/2 x 5	10	3450	2700 & 9.40	2510 & 8.90	2365 & 7.95	2211 & 7.00	1950 & 6.20	1711 & 5.90	$ -	$ 1,796.29	$ -	$ 2,194.64
HADP15-15	14 x 3	15	3450	2565 & 6.20	2347 & 5.80	2175 & 5.30	1841 & 4.60	1586 & 4.00	1181 & 3.20	$ -	$ 2,617.55	$ -	$ 3,228.41

Blower Accessories

Models ADB & ADP

Cast Aluminum Mounting Flanges

Model No.	ID IF COLLAR	OD OF FLANGE	GSA PRICE
IF-4 Mounting Flange	4-1/16"	9"	$ 37.38
IF-5 Mounting Flange	5-1/16"	11"	$ 38.45
IF-6 Mounting Flange	6-1/16"	11"	$ 38.98
IF-7 Mounting Flange	7-1/16"	11"	$ 43.79
IF-8 Mounting Flange	8-1/16"	13 1/2"	$ 51.26
IF-10 Mounting Flange	10-1/16"	16"	$ 52.33

Americraft MANUFACTURING CO. INC.
INDUSTRIAL VENTILATING & EXHAUST FANS

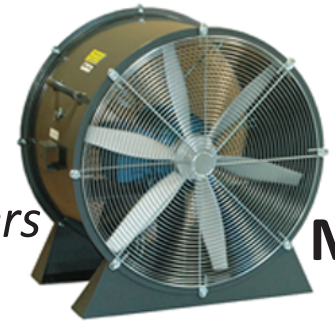

Industrial Direct Drive Man & Product Coolers
Cast Aluminum Propellers with Low Stand

Model DA
Low Stand

FAN			MOTOR	C.F.M.		GSA PRICE			
Model No.	Size	H.P.	RPM	Air Del	DB.	TEFC-1PH (S)	TEFC-3PH (T)	EXP-1PH (SX)	EXP-3PH (TX)
18DA-1/4L	18"	1/4	1725	3050	74	$ 748.63	$ 740.09	$ 905.62	$ 909.36
18DA-1L	18"	1	1725	4600	77	$ 886.93	$ 871.98	$ 1,087.71	$ 1,075.43
24DA-1/2L	24"	1/2	1725	6000	80	$ 835.14	$ 827.13	$ 1,034.31	$ 1,056.20
24DA-1L	24"	1	1725	7400	82	$ 913.10	$ 898.15	$ 1,113.87	$ 1,101.59
24DA-3L	24"	3	1725	10500	87	$ -	$ 1,019.89	$ -	$ 1,333.87
30DA-1/2L	30"	1/2	1725	8900	86	$ 924.31	$ 916.30	$ 1,123.48	$ 1,145.38
30DA-1 1/2L	30"	1 1/2	1725	12000	92	$ 1,076.49	$ 1,020.43	$ 1,586.97	$ 1,429.99
30DA-3L	30"	3	1725	16000	94	$ -	$ 1,081.83	$ -	$ 1,395.81
36DA-1 1/2L	36"	1 1/2	1725	14850	88	$ 1,240.42	$ 1,184.36	$ 1,750.90	$ 1,593.92
36DA-3L	36"	3	1725	18500	90	$ -	$ 1,248.97	$ -	$ 1,562.94
36DAL-3L	36"	3	1140	20500	84	$ -	$ 1,535.71	$ -	$ 1,971.97
42DA-5L	42"	5	1725	27000	98	$ -	$ 1,504.74	$ -	$ 1,911.63
42DAL-5L	42"	5	1140	27000	86	$ -	$ 1,772.26	$ -	$ 2,402.89
48DAL-5L	48"	5	1140	32000	92	$ -	$ 2,055.80	$ -	$ 2,686.43
48DAL-7 1/2L	48"	7 1/2	1140	37000	105	$ -	$ 2,524.10	$ -	$ 2,761.72
60DALL-7 1/2L	60"	7 1/2	870	47000	91	$ -	$ 4,049.13	$ -	$ -
60DALL-10L	60"	10	870	57200	92	$ -	$ 4,516.36	$ -	$ -

Industrial Direct Drive Man & Product Cooler Accessories

Medium Stand

Model No. & Fan Size	GSA Price
MS-Medium Stand - 18"	$ 175.14
MS-Medium Stand - 24"	$ 199.17
MS-Medium Stand - 30"	$ 201.31
MS-Medium Stand - 36"	$ 268.59
MS-Medium Stand - 42"	$ 269.12
MS-Medium Stand - 48"	$ 315.05
MS-Medium Stand - 60"	$ 592.71

GSA price includes cost difference to replace low stand with a medium stand for each respective man and product cooler fan.

Americraft MANUFACTURING CO. INC.
INDUSTRIAL VENTILATING & EXHAUST FANS

Industrial Direct Drive Man & Product Cooler Accessories (con't.)

High Stand

Model No. & Fan Size	GSA Price
MS-High Stand - 18"	$ 261.65
MS-High Stand - 24"	$ 266.99
MS-High Stand - 30"	$ 302.23
MS-High Stand - 36"	$ 324.66
MS-High Stand - 42"	$ 400.48
MS-High Stand - 48"	$ 515.82
MS-High Stand - 60"	$ 732.61

GSA price includes cost difference to replace low stand with a high stand for each respective man and product cooler fan.

One-Way Swivel Yoke Mount

Model No. & Fan Size	GSA Price
1Y-1 Way Swivel - 18"	$ 245.09
1Y-1 Way Swivel - 24"	$ 247.76
1Y-1 Way Swivel - 30"	$ 268.59
1Y-1 Way Swivel - 36"	$ 333.20
1Y-1 Way Swivel - 42"	$ 415.43
1Y-1 Way Swivel - 48"	$ 474.70

GSA price includes cost difference to replace low stand with a one-way swivel yoke mount for each respective man and product cooler fan.

Two-Way Swivel Yoke Mount

Model No. & Fan Size	GSA Price
2Y-2 Way Swivel - 18"	$ 502.47
2Y-2 Way Swivel - 24"	$ 524.90
2Y-2 Way Swivel - 30"	$ 564.41
2Y-2 Way Swivel - 36"	$ 700.58
2Y-2 Way Swivel - 42"	$ 1,127.76
2Y-2 Way Swivel - 48"	$ 1,353.09

GSA price includes cost difference to replace low stand with a two-way swivel yoke mount for each respective man and product cooler fan.

Americraft MANUFACTURING CO. INC.
INDUSTRIAL VENTILATING & EXHAUST FANS

GSA Schedule
Contract GS-07F-0675X

Company Overview:

Americraft has been manufacturing industrial fans since 1946. Americraft manufactures 5 industrial fan products consisting of 19 models ranging in size from 12”- 60” in diameter. Americraft’s manufacturing plants, totaling 50,000sq ft, provide fans to all 50 states & overseas as far away as South America & Saudi Arabia.

Past Performance:

- Experienced Customer Support Staff with in-house engineers and design services.
- Industrial fan provider to four (4) major Industrial Products Catalog Companies in the United States.
- Installation of Quality Industrial Fan Motors to meet The Energy Independence and Security Act of 2007 (Effective December 19, 2010).
- Primary provider of Industrial side wall exhaust fans for HOLT CAT - the authorized Caterpillar® heavy equipment and engine dealer for 118 counties throughout Texas.

GSA Contract: GS-07F-0675X

Schedule 56 – Bldg & Bldg Materials / Industrial Services & Supplies
SIN 563-27 – Industrial & Commercial Fans

Company Designations:

CAGE Code	68FX7
DUNS	092823269
ORCA Registration	Complete

NAICS Codes:

333412 – Industrial & Commercial Fan & Blower Manufacturing

FSC Codes:

4140 – Fans, Air Circulators, and Blower Equipment
4420 – Heat Exchangers and Steam Condensers
4540 – Misc Plumbing, Heating & Sanitation Equipment
5670 – Building Components, Prefabricated

UNSPSC Codes:

40101604 – Fans; 40101605 – Fan Accessories; 40101601 – Blowers

Industrial Fan Products

Exhaust Fans (Wall/Panel Fans)

Roof Ventilators/ Exhausters

Blowers

Man/Product Coolers

Ducts Fans with Factory Installed Belt Guards (Spray Booth Fans)

Accessories/Options:

- Belt or Direct Drive Single Phase or 3-Phase Motors
- Totally Enclosed (Explosion Proof, Fan Cooled, No-Ventilating, & Air-Over) Motors
- Motors In or Out of Air Stream
- Cast Aluminum or Steel Propellers
- Accessories:
  - ✓ Motor Covers
  - ✓ Shutters – Automatic All-Aluminum
  - ✓ Rear Box Guards
  - ✓ Raintight NEMA 3R Non-Fused Disconnect Switch
  - ✓ Flat Roof Curb
  - ✓ Low, Medium, or High Stand; Yoke Mounting (1-way or 2-way Swivel) Coolers

Key Personnel:

Jim Ceddia – President
jceddia@americraftmfg.com
Jim has 33 years experience in the fan industry & started with Americraft in 1978. He has held every major manufacturing & business position within the company & has been largely responsible for its growth & success.

Vince Hartmann, P.E., MBA – Government Sales Manager
vhartmann@americraftmfg.com
Vince is a Retired 25-year Navy Veteran - Civil Engineer Corps (Seabee’s); certified (DoD) Defense Acquisition Professional & a Licensed Professional Civil Engineer in the State of Ohio.

Phone: 800-848-2938 or 513-489-1108 Fax: 513-489-5288 7937 School Road, Cincinnati, OH 45249
www.AmericraftMfg.com

Americraft

MANUFACTURING CO. INC.

INDUSTRIAL VENTILATING & EXHAUST FANS

Americraft Manufacturing Company Inc. has been manufacturing quality industrial fans and ventilation products since 1946. Our 50+ years of proven experience, strong national reputation and excellent customer service are the foundation on which we manufacture quality fan and ventilating products. The Americraft industrial fan products operate in hundreds of different applications across the United States and throughout the world.

Americraft manufacturers the following industrial fan models and ventilation products, ranging in size from 12" to 60" in diameter, as well as fan accessories for each:

- Tube Axial Duct Fans – belt or direct drive
- Wall Exhaust Fans – commercial, industrial, explosion proof and belt or direct drive for low and high pressure exhaust
- Roof Ventilators/Exhausters – belt or direct drive with motors in or out of air stream
- Blowers – direct drive, low and high pressure
- Man and Product Coolers – belt or direct drive on low, medium or high stands or swivel yoke mount

Americraft has established industry leading design freedom. Our customers have the ability to purchase custom built fans & ventilation products that meet their unique design specifications. Our in-house sales and technical staff are composed of a talented group of diverse professionals with breadth and depth of industrial fan expertise.

Americraft is dedicated to assist you, our customer, in all aspects of your air moving requirements.

TABLE OF CONTENTS

TUBE AXIAL DUCT FANS

Model B – Tube Axial Duct Fan – Belt Drive 2-3

Model BCS – Tube Axial Duct Fan – Belt Drive 4-5

Model DF – Tube Axial Duct Fan – Direct Drive 6-7

WALL EXHAUST FANS

Model 600/700 – Commercial Duty Exhaust Fan – Belt Drive 8-9

Model 800 – Industrial Exhaust Fan – Belt Drive 10-11

Model 900 – Industrial Exhaust Fan – Direct Drive 12-13

Model 900 CAF – Filtered Exhaust Fan – Direct Drive 14

Model 600 thru 900 – Package Option 15

ROOF EXHAUSTERS/VENTILATOR

Model BRV – Industrial Roof Exhauster – Belt Drive 16-17

Model BRVCS – Industrial Roof Exhauster – Belt Drive 18-19

Model BRV8 – Industrial Roof Exhauster – Belt Drive 20-21

Model AM – Industrial Roof Exhauster – Direct Drive 22-23

Model 1900B – Industrial Roof Ventilator – Belt Drive 24-25

BLOWERS

Model ADB – Cast Aluminum Volume Blower – Direct Drive 26-27

Model HADP – Cast Aluminum Pressure Blower – Direct Drive 28-29

MAN & PRODUCT COOLERS

Man & Product Cooler – Direct Drive 30-33

PROPELLERS

Cast Aluminum Propeller Performance Data 34-36

WARRANTY and RETURN POLICY ..... INSIDE BACK COVER

GSA Schedule
Contract GS-07F-0675X

Consult Americraft for specific model availability.

MODEL B – TUBE AXIAL DUCT FAN – BELT DRIVE

APPLICATION

Designed to handle clean dry air to a maximum of 180˚F. Ideally suited for removal of fumes in paint spray booths, smoke removal from welding operations or supply air for air make-up systems.

FEATURES AND BENEFITS

- Long-life maintenance free sealed for life fan bearings.
- Spark-resistant heavy duty cast aluminum propellers.
- Adjustable motor base allows for proper belt tension for maximum belt life.
- Pulleys are rugged cast iron or turned steel.
- Motors are high quality industrial grade available in single or three phase - totally enclosed or explosion proof.

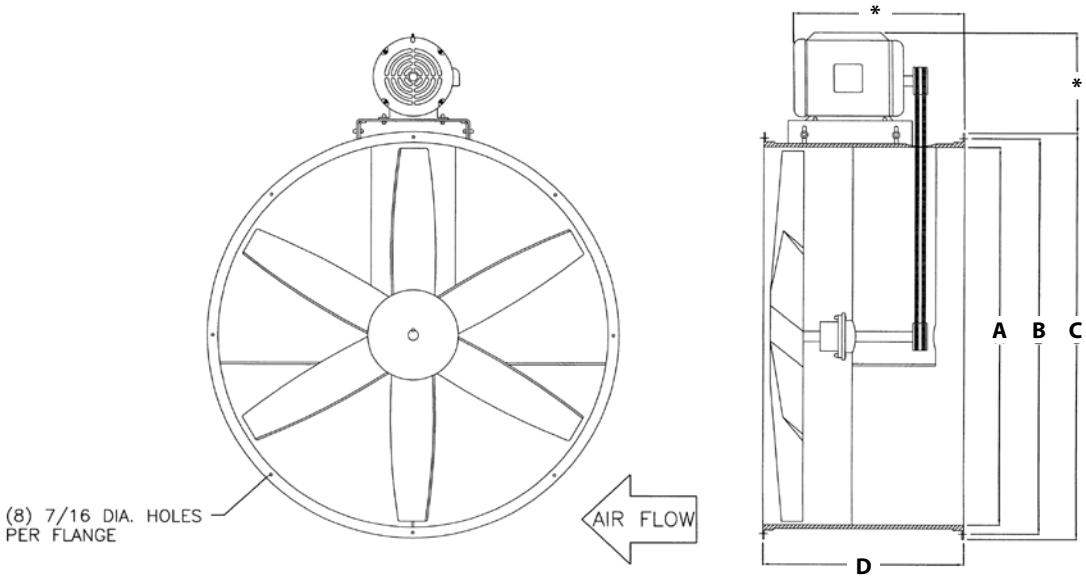

*Dimensions vary with motor.

DIMENSIONS (subject to change without notice)

MODEL	A	B	C	D	HP
B-12	12″	13 1/8″	14″	12″	1/4-3/4
B-15	15″	16 1/8″	17″	12″	1/4-3/4
B-18	18″	19 1/8″	20″	12″	1/4-1 1/2
B-24	24″	25 3/4″	27″	12″	1/2-1
B-24	24″	25 3/4″	27″	16″	1-3
B-27	27″	28 3/4″	30″	16″	3/4-2
B-30	30″	31 3/4″	33″	16″	1/2-5
B-34	34″	35 3/4″	37″	16″	1 1/2-5
B-36	36″	37 7/8″	39″	18″	3-5
B-42	42″	43 9/16″	45″	18″	1 1/2-5

MODEL B – TUBE AXIAL DUCT FAN – BELT DRIVE PERFORMANCE DATA

						CAPACITY C.F.M.						
Blade Dia.	Model	Prop	HP	RPM	Free Air	1/8" SP	1/4" SP	3/8" SP	1/2" SP	3/4" SP	1" SP	1-1/4" SP
12"	B-12-1/4	CA101	1/4	2625	1444	1307	1033	638	380	---	---	---
	B-12-1/3	CA101	1/3	2875	1586	1436	1135	700	415	---	---	---
	B-12-1/2	CA101	1/2	3450	1875	1650	1400	1320	1250	1100	660	---
	B-12-3/4	CA102	3/4	3450	2044	1960	1920	1820	1650	1500	1100	---
15"	B-15-1/4	CA103	1/4	2000	2600	2100	1700	---	---	---	---	---
	B-15-1/3	CA103	1/3	2200	2950	2500	2100	1760	1000	---	---	---
	B-15-1/2	CA264	1/2	1890	3350	3000	2650	2200	1500	---	---	---
	B-15-3/4	CA264	3/4	2200	3900	3700	3400	3100	2700	1150	---	---
18"	B-18-1/4	CA235	1/4	1600	3050	2500	2000	1200	---	---	---	---
	B-18-1/3	CA235	1/3	1725	3375	3000	2600	2000	1400	---	---	---
	B-18-1/2	CA235	1/2	1890	3850	3500	3100	2500	2000	---	---	---
	B-18-1	CA107	1	1725	4600	4375	4080	3600	3000	2100	1550	---
	B-18-1 1/2	CA107	1 1/2	1990	5350	5060	4830	4550	3950	3000	2500	---
24"	B-24-1/2	CA144	1/2	1298	5643	5320	4826	4440	3500	---	---	---
	B-24-3/4	CA144	3/4	1600	6906	6510	5900	5440	4650	2750	---	---
	B-24-1	CA144	1	1725	7425	7000	6350	5850	5000	3300	1775	---
	BPR-24-1	CA196	1	1357	7450	7100	6650	5950	5200	3000	---	---
	BPR-24-1 1/2	CA196	1 1/2	1540	8200	7900	7650	7280	6850	5500	---	---
	BPR-24-2	CA196	2	1680	9600	9250	8940	8655	8250	7300	4800	---
	B-24-2	CA191	2	1600	9760	9114	8830	8460	8090	7000	4400	---
	B-24-3	CA191	3	1725	10500	9800	9500	9100	8700	7800	5000	3600
27"	BPR-27-3/4	CA111	3/4	1250	8330	7814	7550	7070	6500	4650	---	---
	BPR-27-1	CA111	1	1400	9400	8675	8480	7950	7300	5200	---	---
	BPR-27-1 1/2	CA111	1 1/2	1600	10700	10250	9700	9080	8375	6000	2500	---
	BPR-27-2	CA152	2	1350	11500	11200	10700	10000	9300	8000	5200	---
30"	B-30-1/2	CA167	1/2	1300	8900	7925	6660	4270	2300	---	---	---
	B-30-1	CA113	1	1298	9897	8970	7980	6050	4120	---	---	---
	BPR-30-1 1/2	CA115	1 1/2	1035	11100	10600	9700	8600	7500	3500	---	---
	BPR-30-2	CA115	2	1176	12100	11660	11000	10121	9322	6700	---	---
	B-30-3	CA115	3	1350	13480	12982	12498	12042	11465	10380	9470	7500
	B-30-5	CA115	5	1650	16440	15832	15242	14686	13982	12659	11550	9200
34"	B-34-1 1/2	CA128	1 1/2	1170	13695	12400	11100	8365	6000	1015	---	---
	B-34-2	CA190	2	1027	14657	13652	12590	11500	10000	8000	---	---
	B-34-3	CA190	3	1175	17580	16750	15896	14600	14095	12000	9500	---
	B-34-5	CA190	5	1416	20500	19800	19000	18325	17500	16000	14200	12250
36"	BPR-36-3	CA198	3	930	17500	16800	15900	14740	14100	12200	---	---
	BPR-36-5	CA198	5	1100	20600	19950	19200	18500	17800	16020	14300	---
42"	BPR-42-1 1/2	CA119	1 1/2	750	18960	17000	14662	11700	7200	---	---	---
	BPR-42-2	CA119	2	820	20700	18900	17002	14700	11400	4000	---	---
	BPR-42-3	CA119	3	890	23700	22100	20200	18960	16970	9950	3600	---
	BPR-42-5	CA199	5	850	26900	25600	24403	23450	22250	18400	13900	---

OPTIONAL ACCESSORIES

- Belt guard
- Combination motor cover/belt guard
- Companion flanges
- Horizontal support legs
- Horizontal or vertical support brackets
- Inlet or outlet guards – OSHA Compliant
- Inspection door

MODEL BCS – TUBE AXIAL DUCT FAN – BELT DRIVE

APPLICATION

Designed for use in high moisture or contaminated airstreams. Ideally suited for use on industrial parts washers for excess water vapor removal. Suitable for use in dry-off ovens, kilns and low temperature furnaces to 375˚F with the addition of high temperature package.

FEATURES AND BENEFITS

- Bearings located in a sealed watertight chamber and protected by a water slinger and shaft seal.
- Standard propellers are cast aluminum; carbon steel and stainless steel propellers also available.
- Standard construction suitable to 225˚F and up to 375˚F with high temperature package. Fabricated steel propeller is standard above 275˚F.
- Available in 304 or 316 stainless steel construction for harsh or contaminated environments.
- Adjustable motor base allows for proper belt tension for maximum belt life.
- Pulleys are rugged cast iron or turned steel.
- Motors are high quality industrial grade available in single or three phase - totally enclosed or explosion proof.

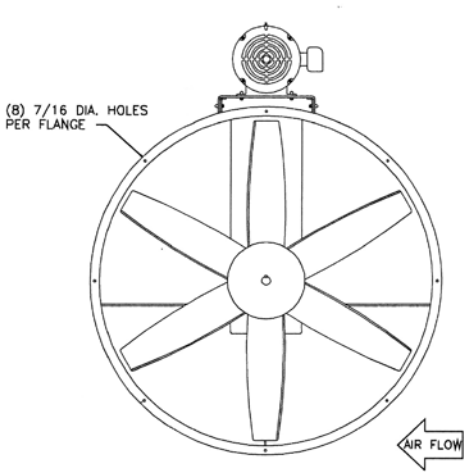

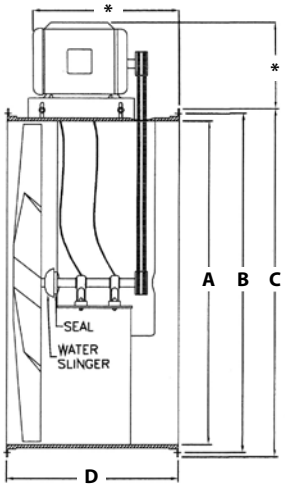

**Dimensions vary with motor.*

DIMENSIONS (subject to change without notice)

MODEL	A	B	C	D	HP
B-12-CS	12″	13 1/8″	14″	18″	1/2-3/4
B-15-CS	15″	16 1/8″	17″	18″	3/4-1
B-18-CS	18″	19 1/8″	20″	18″	1/2-1 1/2
B-24-CS	24″	25 3/4″	27″	18″	1/2-5
B-27-CS	27″	28 3/4″	30″	18″	3/4-3
B-30-CS	30″	31 3/4″	33″	18″	1 1/2-5

MODEL	A	B	C	D	HP
B-34-CS	34″	35 3/4″	37″	18″	2-5
B-36-CS	36″	37 7/8″	39″	18″	3-7 1/2
B-42-CS	42″	43 9/16″	45″	22″	2-10
B-48-CS	48″	49 5/8″	51″	24″	5-10
B-60-CS	60″	61 5/8″	63″	30″	5-10

MODEL BCS – TUBE AXIAL DUCT FAN – BELT DRIVE PERFORMANCE DATA

						CAPACITY C.F.M.							
Blade Dia.	Model	Prop	HP	RPM	Free Air	1/8" SP	1/4" SP	3/8" SP	1/2" SP	3/4" SP	1" SP	1-1/4" SP	1-1/2" SP
12"	B-12-1/2-CS	CA101	1/2	3450	1875	1650	1400	1320	1250	1100	660	---	---
	B-12-3/4-CS	CA102	3/4	3450	2044	1960	1920	1820	1650	1500	1100	---	---
15"	B-15-3/4-CS	CA264	3/4	2200	3900	3700	3400	3100	2700	1150	---	---	---
	B-15-1-CS	CA264	1	2400	4250	4000	3700	3375	2950	1250	---	---	---
18"	B-18-1/2-CS	CA235	1/2	1890	3850	3500	3100	2500	2000	---	---	---	---
	B-18-1-CS	CA107	1	1725	4600	4375	4080	3600	3000	2100	1550	---	---
	B-18-1 1/2-CS	CA107	1 1/2	1990	5350	5060	4830	4550	3950	3000	2500	---	---
24"	B-24-1/2-CS	CA144	1/2	1298	5643	5320	4826	4440	3500	---	---	---	---
	B-24-3/4-CS	CA144	3/4	1600	6906	6510	5900	5440	4650	2750	---	---	---
	B-24-1-CS	CA144	1	1725	7425	7000	6350	5850	5000	3300	1775	---	---
	BPR-24-1-CS	CA196	1	1357	7450	7100	6650	5950	5200	3000	---	---	---
	BPR-24-1 1/2-CS	CA196	1 1/2	1540	8200	7900	7650	7280	6850	5500	---	---	---
	BPR-24-2-CS	CA196	2	1680	9600	9250	8940	8655	8250	7300	4800	---	---
	B-24-2-CS	CA191	2	1600	9760	9114	8830	8460	8090	7000	4400	---	---
	B-24-3-CS	CA191	3	1725	10500	9800	9500	9100	8700	7800	5000	3600	2000
	B-24-5-CS	CA191	5	1920	11400	10600	10350	9900	9475	8500	7200	6000	5000
27"	BPR-27-3/4-CS	CA111	3/4	1250	8330	7814	7550	7070	6500	4650	---	---	---
	BPR-27-1-CS	CA111	1	1400	9400	8675	8480	7950	7300	5200	---	---	---
	BPR-27-1 1/2-CS	CA111	1 1/2	1600	10700	10250	9700	9080	8375	6000	2500	---	---
	BPR-27-2-CS	CA152	2	1350	11500	11200	10700	10000	9300	8000	5200	---	---
	B-27-3-CS	CA152	3	1600	13480	12900	12222	11440	10552	8200	6200	4000	---
30"	BPR-30-1 1/2-CS	CA115	1 1/2	1035	11100	10600	9700	8600	7500	3500	---	---	---
	BPR-30-2-CS	CA115	2	1176	12100	11660	11000	10121	9322	6700	---	---	---
	B-30-3-CS	CA115	3	1350	13480	12982	12498	12042	11465	10380	9470	7500	---
	B-30-5-CS	CA115	5	1650	16440	15832	15242	14686	13982	12659	11550	9200	---
34"	B-34-2-CS	CA190	2	1027	14657	13652	12590	11500	10000	8000	---	---	---
	B-34-3-CS	CA190	3	1175	17580	16750	15896	14600	14095	12000	9500	---	---
	B-34-5-CS	CA190	5	1416	20500	19800	19000	18325	17500	16000	14200	12250	---
36"	BPR-36-3-CS	CA198	3	930	17500	16800	15900	14740	14100	12200	---	---	---
	BPR-36-5-CS	CA198	5	1100	20600	19950	19200	18500	17800	16020	14300	---	---
	BPR-36-7 1/2-CS	CA198	7 1/2	1250	22500	21900	21200	20750	20050	19008	17000	15200	---
42"	BPR-42-2-CS	CA119	2	820	20700	18900	17002	14700	11400	4000	---	---	---
	BPR-42-3-CS	CA119	3	890	23700	22100	20200	18960	16970	9950	3600	---	---
	BPR-42-5-CS	CA199	5	850	26900	25600	24403	23450	22250	18400	13900	---	---
	BPR-42-7 1/2-CS	CA199	7 1/2	960	30800	29600	28500	27400	26200	23500	20500	16500	---
	BPR-42-10-CS	CA199	10	1075	33300	32500	31500	30300	29500	27400	25100	22000	18000
48"	BPR-48-5-CS	CA195	5	800	33000	31000	29400	27500	25670	20700	---	---	---
	BPR-48-7 1/2-CS	CA195	7 1/2	900	37500	35900	34500	32800	31200	27700	23000	---	---
	BPR-48-10-CS	CA195	10	1000	41200	39700	38300	36900	35400	32400	29000	24400	---
60"	BPR-60-5-CS	CA143	5	690	45000	40800	36000	32150	26000	---	---	---	---
	BPR-60-7 1/2-CS	CA227	7 1/2	690	51000	49500	47250	43500	39375	30750	21375	16875	12000
	BPR-60-10-CS	CA227	10	783	54000	51900	49000	46300	43200	36000	27000	---	---

OPTIONAL ACCESSORIES

- Belt guard
- Combination motor cover/belt guard
- Companion flanges
- Horizontal support legs
- Horizontal or vertical support brackets
- Inlet or outlet guards – OSHA compliant
- Inspection door
- Epoxy or urethane coatings
- Adjustable pitch motor pulley
- Continuously welded flanges

MODEL DF – TUBE AXIAL DUCT FAN – DIRECT DRIVE

APPLICATION

Designed for use in dry maximum 104˚F environments to economically remove fumes, dust or smoke. Suitable for use in the following applications:

- air make-up systems where motor must be located in the airstream
- hazardous locations when equipped with explosion proof motor
- harsh, dry environments when equipped with mill and chemical duty motors and special coating.

FEATURES AND BENEFITS

- Standard propellers are non-sparking cast aluminum.
- Fan housing is all welded, heavy gauge steel construction.
- Motors are high quality industrial grade available in single or three phase - totally enclosed or explosion proof.

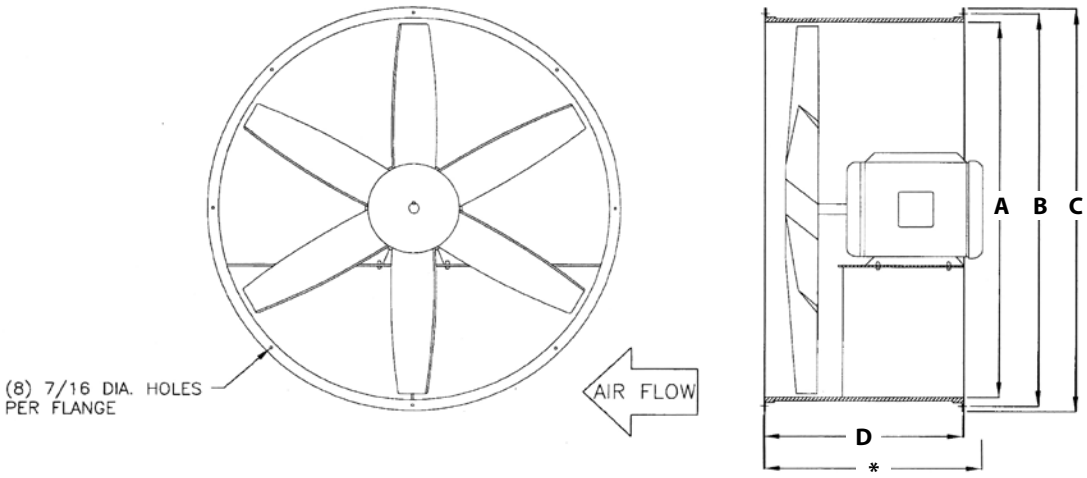

**Dimensions vary with motor.*

DIMENSIONS (subject to change without notice)

MODEL	A	B	C	D	HP
DF-12	12″	13 1/8″	14″	14″	1/4-3/4
DF-18	18″	19 1/8″	20″	14″	1/4-1
DF-24	24″	25 3/4″	27″	18″	1/4-3
DF-27	27″	28 3/4″	30″	18″	1/2-2
DF-30	30″	31 3/4″	33″	18″	1/2-3
DF-34	34″	35 3/4″	37″	18″	1 1/2-5
DF-36	36″	37 7/8″	39″	18″	2-3
DF-42	42″	43 9/16″	45″	18″	1-5
DF-48	48″	49 5/8″	51″	18″	3-5
DF-60	60″	61 5/8″	63″	36″	7 1/2-15

MODEL DF – TUBE AXIAL DUCT FAN – DIRECT DRIVE PERFORMANCE DATA

						CAPACITY C.F.M.						
Blade Dia.	Model	Prop	HP	RPM	Free Air	1/8" SP	1/4" SP	3/8" SP	1/2" SP	3/4" SP	1" SP	1-1/4" SP
12"	DF-12-1/4	CA101	1/4	1725	1180	930	520	---	---	---	---	---
	DF-12-1/2	CA101	1/2	3450	1875	1650	1400	1320	1250	1100	660	---
	DF-12-3/4	CA102	3/4	3450	2044	1960	1920	1820	1650	1500	1100	---
18"	DF-18-1/4	CA105	1/4	1725	3450	3050	2500	1200	---	---	---	---
	DF-18-1/3	CA232	1/3	1725	3375	3000	2600	2000	1400	---	---	---
	DF-18-1/2	CA161	1/2	1725	4150	3850	3150	2800	1700	---	---	---
	DF-18-1	CA107	1	1725	4600	4375	4080	3600	3000	2100	1550	
24"	DF-24-1/4	CA130	1/4	1725	5200	4200	2820	1050	---	---	---	---
	DFL-24-1/3	CA109	1/3	1140	4975	4690	4250	3920	2850	---	---	---
	DF-24-1/2	CA108	1/2	1725	6510	5880	5200	4150	3100	1800	---	---
	DFL-24-3/4	CA191	3/4	1140	6900	6450	6265	5600	3300	---	---	---
	DF-24-1	CA109	1	1725	7425	7000	6350	5850	5000	3300	1775	---
	DF-24-2	CA162	2	1725	9525	9196	8810	8360	7980	6960	3000	---
	DF-24-3	CA191	3	1725	10500	9800	9500	9100	8700	7800	5000	3600
27"	DF-27-1/2	CA121	1/2	1725	7550	6820	6000	5100	4000	2000	---	---
	DF-27-1	CA110	1	1725	9600	9000	8400	7775	7050	4800	---	---
	DF-27-2	CA111	2	1725	11500	11200	10700	10000	9300	8000	5900	3600
30"	DF-30-1/2	CA112	1/2	1725	8980	7650	6300	5400	4350	2300	---	---
	DFL-30-3/4	CA113	3/4	1140	10440	9750	8750	7640	6000	---	---	---
	DF-30-2	CA250	2	1725	12000	11250	10450	9600	8700	6000	4100	
	DFL-30-2	CA115	2	1140	14000	13750	12900	11850	10450	2500	---	---
	DF-30-3	CA113	3	1725	16000	15350	14700	13850	12900	10200	8000	6000
34"	DF-34-1 1/2	CA116	1 1/2	1725	13350	12100	10000	9100	7300	---	---	---
	DF-34-2	CA188	2	1725	14850	13600	12100	10450	8800	4000	---	---
	DFL-34-2	CA163	2	1140	15950	15100	13800	12500	11400	---	---	---
	DFL-34-3	CA123	3	1140	19300	18290	17230	16000	14800	11614	4000	---
	DF-34-5	CA128	5	1725	21000	19850	18900	18200	17500	14850	9300	---
36"	DFL-36-2	CA117	2	1140	17620	16500	15200	13620	12300	8500	---	---
	DF-36-3	CA134	3	1725	18500	17700	15700	15100	13900	11500	8550	---
	DFL-36-3	CA221	3	1140	20500	19500	18500	17100	15850	11600	6500	---
42"	DFLL-42-1	CA165	1	870	15800	15200	13480	12310	5800	900	---	---
	DFL-42-2	CA165	2	1140	17964	17277	15326	13990	12351	7600	---	---
	DFLL-42-2	CA119	2	870	22040	21000	20500	18500	15000	6000	---	---
	DFL-42-3	CA239	3	1140	24500	23150	23000	22000	19650	14000	10000	---
	DFL-42-5	CA119	5	1140	28970	27960	26840	25700	24200	19500	13800	2000
48"	DFL-48-3	CA137	3	1140	28600	26500	24400	22000	20000	15900	11000	---
	DFLL-48-3	CA139	3	870	28700	26500	24200	21600	18500	10000	---	---
	DFLL-48-5	CA138	5	870	33000	31500	29750	27650	25300	18000	---	---
60"	DFLL60-7 1/2	CA228	7 1/2	870	47000	45500	43600	41000	38700	33000	24000	---
	DFLL60-10	CA143	10	870	57200	54400	51000	48500	45000	38000	29500	---
	DFLL60-15	CA227	15	870	60750	58875	56625	54375	51750	47625	42000	34500

OPTIONAL ACCESSORIES

- Companion flanges
- Horizontal support legs
- Horizontal or vertical support brackets
- Inlet or outlet guards – OSHA compliant
- Inspection door
- Epoxy or urethane coatings

MODEL 600/700 – COMMERCIAL DUTY EXHAUST FAN – BELT DRIVE

APPLICATION

Economical fans for light duty general exhaust requirements. Well suited for factory or warehouse ventilation.

FEATURES AND BENEFITS

- Heavy duty 4-blade fabricated steel propellers standard.
- Sealed pillow block ball bearings.
- Fans shipped fully assembled and factory tested; ready for field installation.
- Motors are high quality industrial grade available in single or three phase - totally enclosed fan cooled.
- Belt driven for quiet operation.
- Suitable for intake or exhaust air flow.

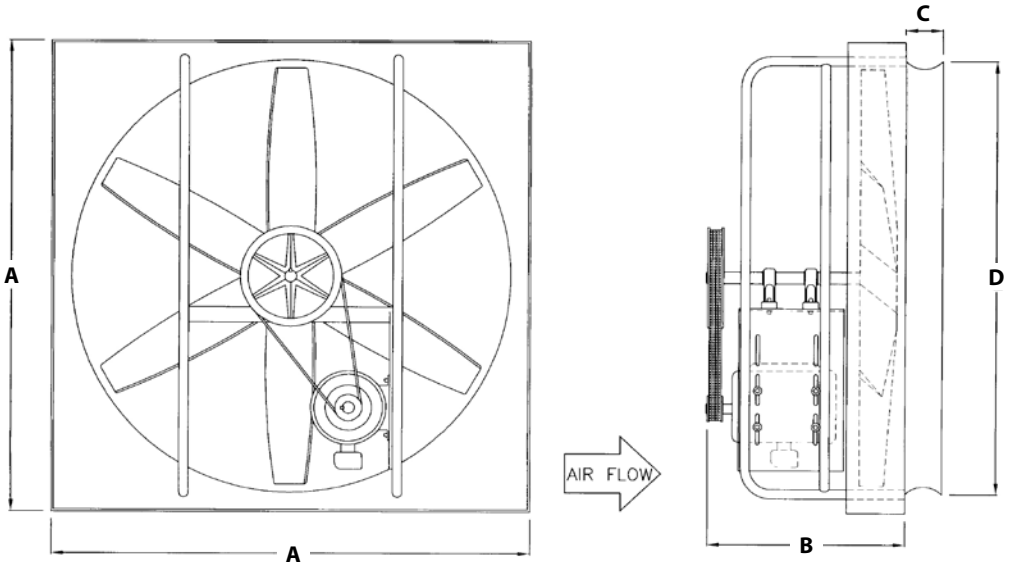

**Fan shown in exhaust configuration.*

DIMENSIONS (subject to change without notice)

MODEL	A	B	C	D	HP
624	30″	18″	3 1/2″	25 1/2″	1/3-1
630	36″	18″	3 1/2″	31 1/2″	1/3-1
636	42″	20″	4″	37 1/2″	1/3-1
642	48″	20″	4 1/4″	44″	3/4-1 1/2
648	54″	22″	4 1/2″	50 1/2″	3/4-1 1/2

MODEL	A	B	C	D	HP
736	42″	20″	4″	37 1/2″	1 1/2-2
742	48″	20″	4 1/4″	44″	2-3
748	54″	22″	4 1/2″	50 1/2″	2-5
760	66″	28″	5″	62″	2-5

MODEL 600/700 – COMMERCIAL DUTY EXHAUST FAN – BELT DRIVE
PERFORMANCE DATA

					CAPACITY C.F.M.			
Blade Dia.	Model	HP	RPM	Free Air	1/8" SP	1/4" SP	1/2" SP	3/4" SP
24"	624-1/3	1/3	825	5300	4700	3800	2200	1400
	624-1/2	1/2	925	6200	5700	5000	4000	2600
	624-3/4	3/4	1050	7000	6600	6000	4400	3000
	624-1	1	1175	7800	7400	6900	5700	3500
30"	630-1/3	1/3	570	7500	6000	3400	700	-
	630-1/2	1/2	625	8500	7100	4400	2700	1300
	630-3/4	3/4	725	10000	9100	7600	5100	1800
	630-1	1	825	11000	10400	9300	5500	2800
36"	636-1/3	1/3	425	9000	6800	3500	500	-
	636-1/2	1/2	500	10500	8800	5900	3600	2000
	636-3/4	3/4	575	11900	10500	8500	5500	4000
	636-1	1	650	13100	11800	10200	6900	5000
	736-1 1/2	1 1/2	750	15000	13500	12500	8500	5500
	736-2	2	830	16500	15500	14500	11000	7000
42"	642-3/4	3/4	430	14000	11500	7600	4800	3300
	642-1	1	490	15400	13100	10400	6400	4600
	642-1 1/2	1 1/2	550	17200	15300	12400	7900	5300
	742-2	2	620	19400	17500	15600	9700	6000
	742-3	3	700	22000	20500	19000	15000	8000
48"	648-3/4	3/4	350	17000	12000	7000	2000	-
	648-1	1	400	19100	16000	10900	6400	4000
	648-1 1/2	1 1/2	460	22000	19000	14000	10000	6000
	748-2	2	520	24000	22000	18000	12000	7500
	748-3	3	590	27500	25000	22500	16000	9000
	748-5	5	660	30500	28500	26000	21000	13000
60'	760-2	2	320	31000	26000	16000	7000	-
	760-3	3	370	35000	31000	23000	11000	-
	760-5	5	420	39000	35000	29000	18000	-

OPTIONAL ACCESSORIES

- Fan & shutter mounting box
- Front & rear OSHA compliant guards
- All aluminum gravity exhaust shutter
- Weatherhood with birdscreen

MODEL 800 – INDUSTRIAL EXHAUST FAN – BELT DRIVE

APPLICATION

Designed to move large volumes of ambient air at low static pressures. Excellent for general ventilation in factories and warehouses for continuous duty applications.

FEATURES AND BENEFITS

- Heavy duty shaft and relubricatable bearings provide many years of reliable service.
- Rugged 4-blade fabricated steel propellers.
- All welded motor and bearing support structure.
- Available for exhaust or intake air applications.
- High quality industrial grade motors available in single or three phase, totally enclosed fan cooled.
- Suitable for use in hazardous locations with the optional cast aluminum propeller and explosion proof motor.

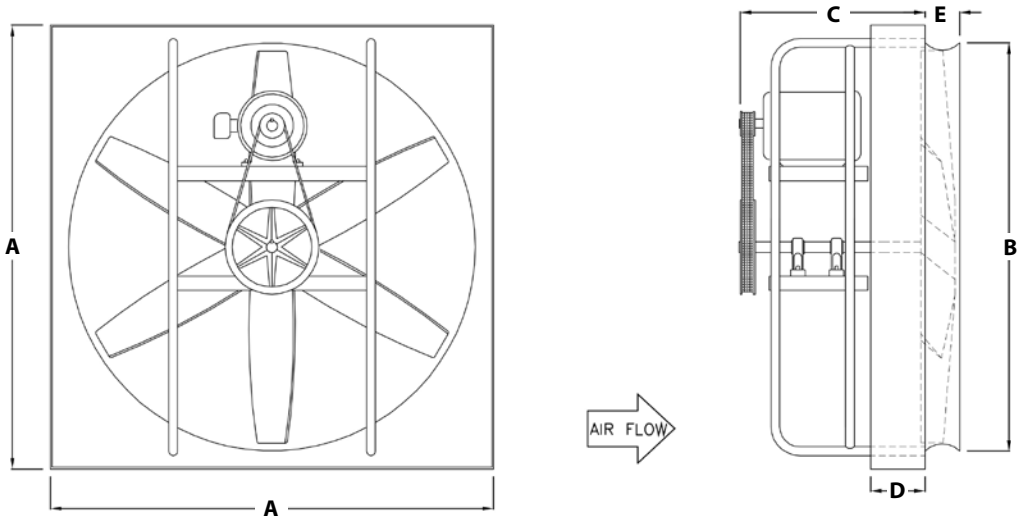

**Fan shown in exhaust configuration.*

DIMENSIONS (subject to change without notice)

MODEL	A	B	C	D	E	HP
824	30″	25 1/2″	20″	2 3/4″	3 1/2″	1/4-1
830	36″	31 1/2″	20″	2 3/4″	3 1/2″	1/4-1 1/2
836	42″	37 1/2″	22″	2 3/4″	4″	1/3-2
842	48″	44″	24″	2 3/4″	4 1/4″	1/3-3
848	54″	50 1/2″	25″	2 3/4″	4 1/2″	1/2-5
854	60″	56 1/2″	26″	2 3/4″	4 3/4″	3/4-5
860	66″	62″	28″	2 3/4″	5″	1-5
872	80 1/2″	76″	28 1/2″	2 3/4″	6 1/2″	3-15

MODEL 800 – INDUSTRIAL EXHAUST FAN – BELT DRIVE PERFORMANCE DATA

						CAPACITY C.F.M.			
Blade Dia.	Model	Prop	HP	RPM	Free Air	1/8" SP	1/4" SP	3/8" SP	1/2" SP
24"	824-1/4	S-24	1/4	780	4900	4222	2807	1576	800
	824-1/2	S-24	1/2	980	6219	5716	5061	4043	2600
	824-3/4	S-24	3/4	1140	7090	6648	6144	5518	4413
	824-1	X-24	1	1250	7180	6696	6271	5600	4464
30"	830-1/4	S-30	1/4	540	7178	5327	2611	991	-
	830-1/3	S-30	1/3	595	7909	6380	3617	1808	767
	830-1/2	S-30	1/2	640	8507	7170	4486	2724	1373
	830-3/4	S-30	3/4	770	10235	9192	7657	5108	3833
	830-1	X-30	1	975	10668	9959	8626	6828	5184
	830-1 1/2	X-30	1 1/2	1140	12473	11867	11112	9656	8135
36"	836-1/3	S-36	1/3	460	9113	6992	3722	1825	486
	836-1/2	S-36	1/2	530	10500	8821	5985	3642	2084
	836-3/4	S-36	3/4	605	11985	10583	8563	5545	4017
	836- 1	S-36	1	665	13174	11932	10299	7913	5729
	836-1 1/2	X-36	1 1/2	720	13660	12012	9579	7240	5000
	836-2	X-36	2	870	16554	15376	14088	11942	9691
42"	842-1/3	S-42	1/3	335	10614	8042	4263	2620	-
	842-1/2	S-42	1/2	390	12343	9352	4957	3050	1642
	842-3/4	S-42	3/4	435	14040	11530	7633	4847	3311
	842-1	S-42	1	490	15429	13194	10438	6414	4668
	842-1 1/2	S-42	1 1/2	550	17420	15421	13117	9980	7289
	842-2	X-42	2	725	20653	19128	17503	15264	11319
	842-3	X-42	3	830	23645	22296	20984	19406	17290
48"	848-1/2	S-48	1/2	330	15230	10800	4721	2175	-
	848-3/4	S-48	3/4	370	17339	13700	7389	4283	2244
	848-1	S-48	1	410	19188	16078	10908	6378	4037
	848-1 1/2	S-48	1 1/2	465	21731	19010	14991	10950	7081
	848-2	S-48	2	520	24274	21943	19080	15532	10125
	848-3	X-48	3	680	28150	25683	23615	20820	16930
	848-5	X-48	5	800	33160	30900	29290	27380	25000
54"	854-3/4	X-54	3/4	350	19700	17573	14938	9935	-
	854-1	X-54	1	410	23130	20588	17500	11640	9600
	854-1 1/2	X-54	1 1/2	450	25400	22600	19300	12782	10316
	854-2	X-54	2	480	27200	24312	20660	13642	11010
	854-3	X-54	3	550	31213	28722	25830	21730	15420
	854-5	X-54	5	660	37458	35238	32843	30298	26538
60"	860-1	X-60	1	280	23090	19161	12850	-	-
	860-1 1/2	X-60	1 1/2	340	28068	23283	15624	11434	8000
	860-2	X-60	2	390	32200	26710	17924	13118	9380
	860-3	X-60	3	450	37183	32356	25324	18705	15013
	860-5	X-60	5	540	44600	41232	35819	29000	23237
72"	872-3	X-72	3	310	41666	33089	22516	-	-
	872-5	X-72	5	372	50026	43458	33391	24937	-
	872-7 1/2	X-72	7 1/2	429	57686	52256	45034	37057	28586
	872-10	X-72	10	474	63721	59000	52852	44423	-
	872-15	X-72	15	544	73203	69341	64343	58635	50696

OPTIONAL ACCESSORIES

- Front & rear OSHA compliant guards
- All aluminum gravity exhaust shutter
- Motorized exhaust or intake shutter
- Fan & shutter mounting box
- Weatherhood with birdscreen

MODEL 900 – INDUSTRIAL EXHAUST FAN – DIRECT DRIVE

APPLICATION

Excellent for use in higher static pressure applications in factories, warehouses and mills for fume, smoke or dust removal. Provides dependable performance with little maintenance.

FEATURES AND BENEFITS

- Cast aluminum spark resistant propellers standard.
- Suitable for use in hazardous environments with the addition of an explosion proof motor.
- More CFM per dollar spent than belt driven fan.
- Low maintenance.
- Lighter weight than belt driven units – facilitates installation.
- Heavy duty spun venturi panel with rugged all welded motor support structure.
- Available for exhaust or intake air applications.

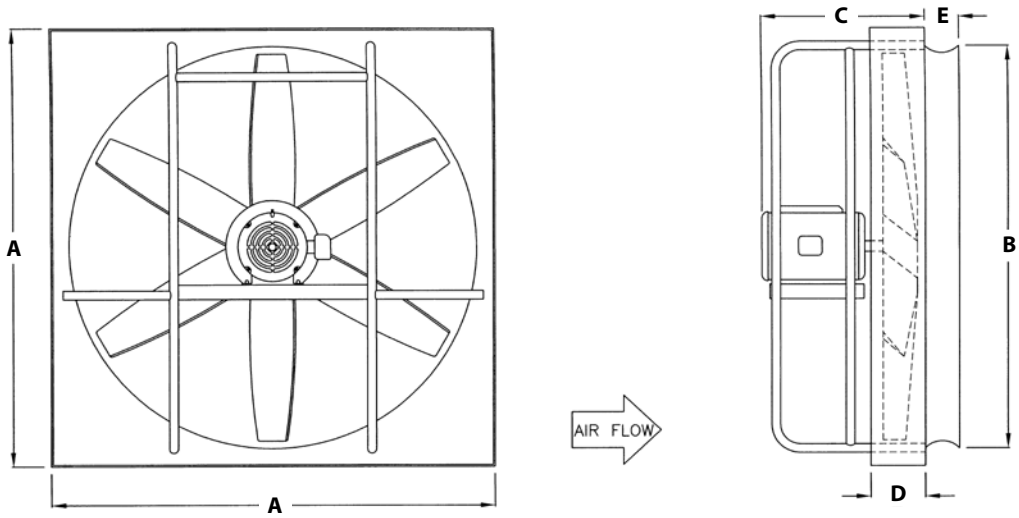

**Fan shown in exhaust configuration.*

DIMENSIONS (subject to change without notice)

MODEL	A	B	C	D	E	HP
912	16″	13″	11″	1″	1 1/4″	1/4
916	20″	17 1/2″	11″	1″	2 1/4″	1/4
918	24″	19 1/2″	13″	1″	2 1/2″	1/3-1/2
920	24″	21 1/2″	13″	1″	2 3/4″	1/4-1
924	30″	25 1/2″	15″	2 3/4″	3 1/2″	1/4-3
930	36″	31 1/2″	15″	2 3/4″	3 1/2″	1/3-3
936	42″	37 1/2″	15″	2 3/4″	4″	1-5
942	48″	44″	18″	2 3/4″	4 1/4″	1-5
948	54″	50 1/2″	20″	2 3/4″	4 1/2″	3-5
954	60″	56 1/2″	22″	2 3/4″	4 3/4″	3-10
960	66″	62″	22″	2 3/4″	5″	5-10

MODEL 900 – INDUSTRIAL EXHAUST FAN – DIRECT DRIVE PERFORMANCE DATA

						CAPACITY C.F.M.							
Blade Dia.	Model	Prop	HP	RPM	Free Air	1/8" SP	1/4" SP	3/8" SP	1/2" SP	3/4" SP	1" SP	1-1/4" SP	1- 1/2" SP
12"	912-1/4	CA101	1/4	1725	1180	930	520	-	-	-	-	-	-
16"	916-1/4	CA159	1/4	1725	2800	2400	2000	1400	700	-	-	-	
	L-916-1/4	CA160	1/4	1140	2100	1700	500	-	-	-	-	-	-
18"	918-1/3	CA232	1/3	1725	3375	3000	2600	2000	1400	-	-	-	-
	918-1/2	CA161	1/2	1725	4150	3850	3150	2800	1700	-	-	-	-
20"	L-920-1/4	CA184	1/4	1140	2800	2560	2380	1400	-	-	-	-	-
	920-1/4	CA149	1/4	1725	3720	3160	2510	1650	-	-	-	-	-
	920-1/2	CA148	1/2	1725	4800	4450	3950	3340	2500	-	-	-	-
	920-1	CA180	1	1725	6900	6600	6200	5900	5500	3700	850	-	-
24"	924-1/4	CA130	1/4	1725	5200	4200	2820	1050	-	-	-	-	-
	L-924-1/3	CA109	1/3	1140	4975	4690	4250	3920	2850	-	-	-	-
	924-1/2	CA108	1/2	1725	6510	5880	5200	4150	3100	1800	-	-	-
	L-924-1/2	CA236	1/2	1140	6840	6100	5170	1900	-	-	-	-	-
	924-3/4	CA173	3/4	1725	6900	6510	5900	5440	4650	2750	-	-	-
	L-924-3/4	CA114	3/4	1140	6900	6450	6265	5600	3300	-	-	-	-
	924-1	CA109	1	1725	7425	7000	6350	5850	5000	3300	1775	-	-
	924-2	CA162	2	1725	9525	9196	8810	8360	7980	6960	3000	-	-
	924-3	CA114	3	1725	10500	9800	9500	9100	8700	7800	5000	3600	-
30"	L-930-1/3	CA167	1/3	1140	6950	5550	3900	1500	-	-	-	-	-
	930-1/2	CA112	1/2	1725	8980	7650	6300	5400	4350	2300	-	-	-
	L-930-1/2	CA132	1/2	1140	7500	6150	4400	2200	-	-	-	-	-
	L-930-3/4	CA113	3/4	1140	10440	9750	8750	7640	6000	-	-	-	-
	LL-930-1	CA115	1	870	10640	10450	9800	9000	7900	-	-	-	-
	930-1 1/2	CA132	1 1/2	1725	12000	11250	10450	9600	8700	6700	-	-	-
	L-930-1 1/2	CA127	1 1/2	1140	13350	12500	11450	10200	8000	5000	-	-	-
	L-930-2	CA115	2	1140	14000	13750	12900	11850	10450	2500	-	-	-
	930-3	CA113	3	1725	16000	15350	14700	13850	12900	10200	8000	6000	-
36"	L-936-1	CA134	1	1140	13600	12000	11100	9000	7500	2800	-	-	-
	LL-936-2	CA163	2	870	17600	16500	15200	13620	11400	-	-	-	-
	L-936-2	CA117	2	1140	17620	16500	15200	13620	12300	8500	-	-	-
	L-936-3	CA221	3	1140	20500	19500	18500	17100	15850	11600	6500	-	-
	936-5	CA117	5	1725	23000	22150	21100	20200	19000	18100	16400	14500	6000
42"	L-942-2	CA165	2	1140	17964	17277	15326	13990	12351	7600	-	-	-
	L-942-3	CA239	3	1140	24500	23150	23000	22000	19650	14000	10000	-	-
	L-942-5	CA119	5	1140	28970	27960	26840	25700	24200	19500	13800	2000	-
	LL-942-1	CA165	1	870	15800	15200	13480	12310	5800	900	-	-	-
	LL-942-2	CA119	2	870	22040	21000	20500	18500	15000	6000	-	-	-
48"	L-948-3	CA137	3	1140	28600	26500	24400	22000	20000	15900	11000		-
	L-948-5	CA185	5	1140	32000	30493	28900	27173	25432	21054	14985	7100	-
	LL-948-3	CA139	3	870	28700	26500	24200	21600	18500	10000	-	-	-
	LL-948-5	CA138	5	870	33000	31500	29750	27650	25300	18000	-	-	-
60"	L-960-5	CA142	5	1140	45000	41000	37000	33500	28500	16000	2500	-	-
	LL-960-5	CA169	5	870	45200	41500	37000	33000	26000	14000	-	-	-
	LL-960-7 1/2	CA228	7 1/2	870	47000	45500	43600	41000	38700	33000	24000	-	-
	LL-960-10	CA143	10	870	57200	54400	51000	48500	45000	38000	29500	-	-

NOTE: Consult factory for Model 954 performance data.

OPTIONAL ACCESSORIES

- Fan & shutter mounting box
- Front & rear OSHA compliant guards
- All aluminum gravity exhaust shutter
- Motorized exhaust or intake shutter
- Weatherhood with birdscreen

MODEL 900 CAF – FILTERED EXHAUST FAN – DIRECT DRIVE

APPLICATION

Excellent for use where filtered intake or exhaust air is required. Efficiently supplies clean, filtered air for OEM machinery and equipment markets such as pressurizing electrical cabinets. Economical choice for small unducted paint spray booths.

FEATURES AND BENEFITS

- Available with TEFC or explosion proof motors in single or three phase.
- Rugged spark-resistant cast aluminum propellers are standard.
- Standard OSHA style propeller guard.
- Removable filter box section.
- Disposable 2″ filters are high capacity, pleated type that meet MERV 8 rating.

OPTIONAL ACCESSORIES

- Inlet weatherhood for intake fans.
- Coatings available for harsh environments.

MODEL CAF EXHAUST AND INTAKE

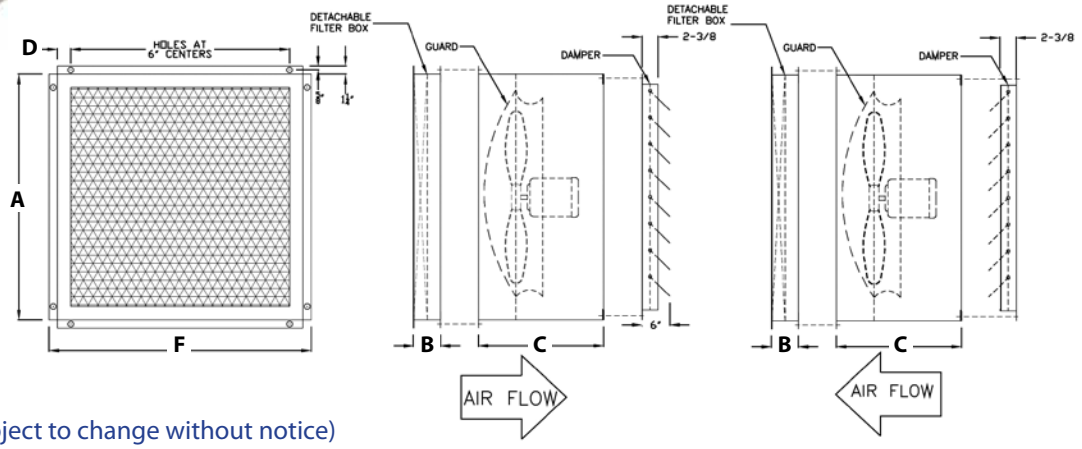

DIMENSIONS (subject to change without notice)

MODEL	A	B	C	D	F	FILTER SIZE
CAF-912	16 1/4″	4″	20″	2″	18 3/4″	16x16x2 (1)
CAF-916	20 1/4″	4″	20″	3″	22 3/4″	20x20x2 (1)
CAF-918	24 1/4″	4″	20″	3″	26 3/4″	24x24x2 (1)
CAF-920	24 1/4″	4″	22″	3″	26 3/4″	24x24x2 (1)
CAF-924	30 1/4″	4″	25″	3″	32 3/4″	20x20x2 (1) 20x10x2 (2) 10x10x2 (1)
CAF-930	36 1/4″	4″	28″	3″	38 3/4″	18x18x2 (4)
CAF-936	42 1/4″	33″	36″	3″	44 3/4″	18x24x2 (4) 24x24x2 (4)
CAF-942	48 1/4″	33″	37″	3″	50 3/4″	24x24x2 (8)
CAF-948	54 1/4″	33″	37″	3″	56 3/4″	18x24x2 (12)

PERFORMANCE DATA

Model	Blade Diam.	HP	RPM	# of Filters	CFM w/Filters
CAF-912-1/4	12	1/4	1725	1	520
CAF-916-1/4	16	1/4	1725	1	2000
CAF-918-1/2	18	1/2	1725	1	3150
CAF-920-1	20	1	1725	1	6200
CAF-924-1	24	1	1725	4	6350
CAF-930-1/2	30	1/2	1725	4	6300
CAF-L936-2	36	2	1140	8	13875
CAF-L942-2	42	2	1140	8	16000
CAF-L948-3	48	3	1140	12	18750

MODEL 600 THRU 900 – PKG

APPLICATION

Designed for use with all wall ventilation fans to simplify mounting in block, concrete, or metal wall. Can be used for exhaust or intake fans (with intake damper & weatherhood). Provides correct spacing between propeller and shutter

FEATURES AND BENEFITS

- Heavy gauge fan & shutter mounting box – fan and shutter factory mounted.
- All aluminum gravity discharge shutter.
- Rear box type guard – OSHA compliant.
  - Sizes 12", 16", 18", 20" & 54" are fabricated expanded metal.
  - Sizes 24", 30", 36", 42", 48" & 60" are formed wire five piece guards.
- Performance ratings as shown on our standard 600 thru 900 performance data tables.

OPTIONAL ACCESSORIES

- Exterior weather hood recommended for intake.

Drawing and Dimensions are for Model 900 only.

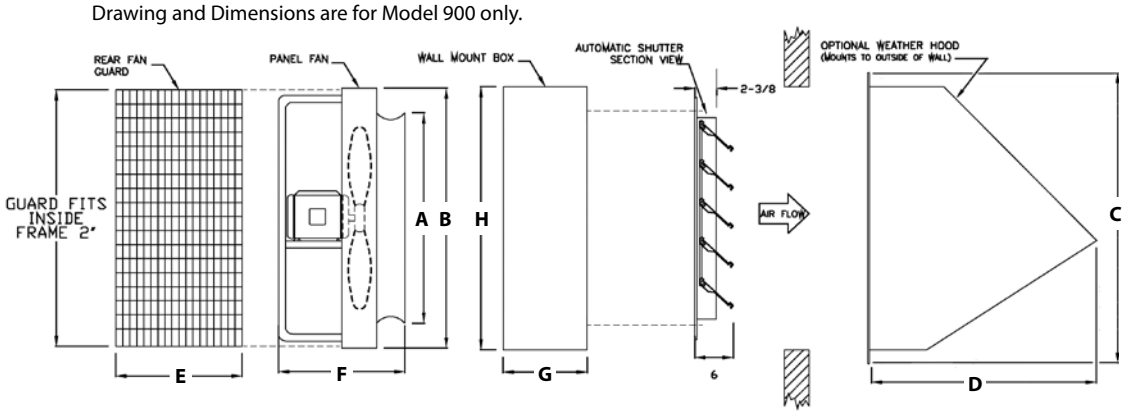

*Fan shown in exhaust configuration.

DIMENSIONS (subject to change without notice)

MODEL	A	B	C	D	H	G	WALL OPENING	E	F	SHUTTER SIZE
912	13"	16"	23"	22"	16 1/4"	8"	16 3/4"	15"	11"	12"
916	17 1/2"	20"	27"	24"	20 1/4"	9"	20 3/4"	15"	11"	16"
918	19 1/2"	24"	29"	25"	24 1/4"	10"	24 3/4"	15"	13"	18"
920	21 1/2"	24"	31"	26"	24 1/4"	11"	24 3/4"	15"	13"	20"
924	25 1/2"	30"	35"	28"	30 1/4"	14"	30 3/4"	24"	15"	24"
930	31 1/2"	36"	41"	32"	36 1/4"	14"	36 3/4"	24"	15"	30"
936	37 1/2"	42"	47"	36"	42 1/4"	15"	42 3/4"	24"	15"	36"
942	44"	48"	53"	44"	48 1/4"	16"	48 3/4"	24"	18"	42"
948	50 1/2"	54"	59"	46"	54 1/4"	16"	54 3/4	24"	20"	48"
954	56 1/2"	60"	65"	50"	60 1/4"	18"	60 3/4"	24"	22"	54"
960	62"	66"	71"	54"	66 1/4"	18"	66 3/4"	26 1/2"	22"	60"

MODEL BRV – INDUSTRIAL ROOF EXHAUSTER – BELT DRIVE

APPLICATION

Designed for smoke, heat and fume removal in situations requiring the motor and drive components to be located outside the airstream.

FEATURES AND BENEFITS

- Utilizes Model B tube axial duct fan with cast aluminum spark-resistant propeller standard.
- Heavy gauge curb cap continuously welded to prevent water penetration.
- Butterfly damper section, mill galvanized construction, with damper blades that open when fan is energized and close weathertight when unit is off. Dampers rotate in nylon bearings on a stainless steel axle.
- Butterfly damper section removable as a complete unit for access to propeller.
- Combination weather cover/belt guard.
- Motor and drive components located outside the airstream.
- Fan suitable for use in dry environments up to 180˚F.

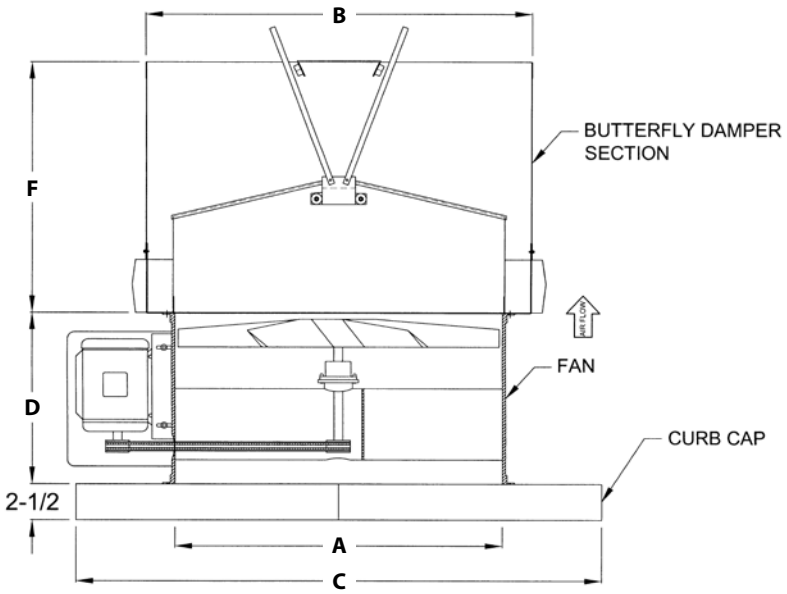

DIMENSIONS (subject to change without notice)

MODEL	A	B	C	D	F	HP
BRV-18	18″	24″	33″ sq.	12″	20″	1/3-1 1/2
BRV-24	24″	30″	39″ sq.	12″	24″	3/4-1
BRV-24	24″	30″	39″ sq.	16″	24″	1 1/2-3
BRV-30	30″	36″	45″ sq.	16″	26″	1-5

MODEL	A	B	C	D	F	HP
BRV-34	34″	40″	49″ sq.	16″	29″	2-5
BRV-36	36″	42″	51″ sq.	18″	30 1/2″	3-7 1/2
BRV-42	42″	48″	57″ sq.	18″	33″	2-5

MODEL BRV – INDUSTRIAL ROOF EXHAUSTER – BELT DRIVE PERFORMANCE DATA

						CAPACITY C.F.M.							
Blade Dia.	Model	Prop	HP	RPM	Free Air	1/8" SP	1/4" SP	3/8" SP	1/2" SP	3/4" SP	1" SP	1-1/4" SP	1-1/2" SP
18"	BRV-18-1/3	CA235	1/3	1725	3375	3000	2600	2000	1400	---	---	---	---
	BRV-18-1/2	CA235	1/2	1890	3850	3500	3100	2500	2000	---	---	---	---
	BRV-18-3/4	CA107	3/4	1600	4100	3985	3440	3050	2500	---	---	---	---
	BRV-18-1	CA107	1	1725	4600	4375	4080	3600	3000	2100	1550	---	---
	BRV-18-1-1/2	CA107	1-1/2	1990	5350	5060	4830	4550	3950	3000	2500	---	---
24"	BRV-24-3/4	CA144	3/4	1600	6906	6510	5900	5440	4650	2750	---	---	---
	BRV-24-1	CA144	1	1725	7425	7000	6350	5850	5000	3300	1775	---	---
	BPRRV-24-1-1/2	CA196	1-1/2	1540	8200	7900	7650	7280	6850	5500	---	---	---
	BRV-24-2	CA191	2	1600	9760	9114	8830	8460	8090	7000	4400	---	---
	BRV-24-3	CA191	3	1725	10500	9800	9500	9100	8700	7800	5000	3600	---
30"	BRV-30-1	CA113	1	1298	9897	8970	7980	6050	4120	---	---	---	---
	BPRRV-30-1-1/2	CA115	1-1/2	1035	11100	10600	9700	8600	7500	3500	---	---	---
	BPRRV-30-2	CA115	2	1176	12100	11660	11000	10121	9322	6700	---	---	---
	BRV-30-3	CA115	3	1350	13480	12982	12498	12042	11465	10380	9470	7500	---
	BRV-30-5	CA115	5	1650	16440	15832	15242	14686	13982	12659	11550	9200	---
34"	BRV-34-2	CA190	2	1027	14657	13652	12590	11500	10000	8000	---	---	---
	BRV-34-3	CA190	3	1175	17580	16750	15896	14600	14095	12000	9500	---	---
	BRV-34-5	CA190	5	1416	20500	19800	19000	18325	17500	16000	14200	12250	---
36"	BPRRV-36-3	CA198	3	930	17500	16800	15900	14740	14100	12200	---	---	---
	BPRRV-36-5	CA198	5	1100	20600	19950	19200	18500	17800	16020	14300	---	---
	BPRRV-36-7-1/2	CA198	7-1/2	1250	22500	21900	21200	20750	20050	19008	17000	15200	---
42"	BPRRV-42-2	CA119	2	820	20700	18900	17002	14700	11400	4000	---	---	---
	BPRRV-42-3	CA119	3	890	23700	22100	20200	18960	16970	9950	3600	---	---
	BPRRV-42-5	CA199	5	850	26900	25600	24403	23450	22250	18400	13900	---	---

OPTIONAL ACCESSORIES

- Weatherproof non-fused disconnect switches
- Insulated roof curbs for flat or pitched roofs

MODEL BRVCS – INDUSTRIAL ROOF EXHAUSTER – BELT DRIVE

APPLICATION

Designed for use in high moisture or contaminated airstreams requiring the motor and drive components to be located outside the airstream. Can be adapted to facilitate ductwork connection to fan inlet.

FEATURES AND BENEFITS

- Utilizes Model BCS tube axial duct fan with cast aluminum spark-resistant propeller standard.
- Heavy gauge curb cap continuously welded to prevent water penetration.
- Butterfly damper section, mill galvanized construction, with damper blades that open when fan is energized and close watertight when unit is off. Dampers rotate in nylon bearings on a stainless steel axle.
- Butterfly damper section removable as a complete unit for access to propeller.
- Combination weather cover/belt guard.
- Motor and drive components located outside the airstream.
- Suitable for maximum temperature up to 225˚F.
- High temperature package available for a maximum 375˚F which includes fabricated steel propeller above 275 ˚F airstreams.
- Available in 304 or 316 stainless steel construction.

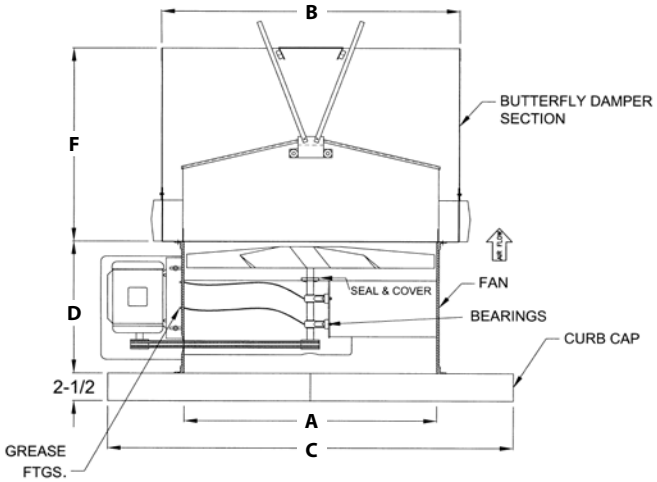

DIMENSIONS (subject to change without notice)

MODEL	A	B	C	D	F	HP
BRV-CS-18	18″	24″	33″ sq.	18″	20″	1/3-1 1/2
BRV-CS-24	24″	30″	39″ sq.	18″	24″	3/4-3
BRV-CS-30	30″	36″	45″ sq.	18″	26″	1-5
BRV-CS-34	34″	40″	49″ sq.	18″	29″	2-5

MODEL	A	B	C	D	F	HP
BRV-CS-36	36″	42″	51″ sq.	18″	30 1/2″	3-7 1/2
BRV-CS-42	42″	48″	57″ sq.	22″	33″	2-10
BRV-CS-48	48″	54″	63″ sq.	24″	33 1/2″	5-10
BRV-CS-60	60″	66″	75″ sq.	30″	40″	5-15

MODEL BRVCS – INDUSTRIAL ROOF EXHAUSTER – BELT DRIVE
PERFORMANCE DATA

							CAPACITY C.F.M.							
Blade Dia.	Model	Prop	HP	RPM	Curb Cap (Sq.)	Free Air	1/8" SP	1/4" SP	3/8" SP	1/2" SP	3/4" SP	1" SP	1-1/4" SP	1-1/2" SP
18	BRV-18-1/3-CS	CA235	1/3	1725	33"	3375	3000	2600	2000	1400	---	---	---	---
	BRV-18-1/2-CS	CA235	1/2	1890		3850	3500	3100	2500	2000	---	---	---	---
	BRV-18-3/4-CS	CA107	3/4	1600		4100	3985	3440	3050	2500	---	---	---	---
	BRV-18-1-CS	CA107	1	1725		4600	4375	4080	3600	3000	2100	1550	---	---
	BRV-18-1-1/2-CS	CA107	1-1/2	1990		5350	5060	4830	4550	3950	3000	2500	---	---
24	BRV-24-3/4-CS	CA144	3/4	1600	39"	6906	6510	5900	5440	4650	2750	---	---	---
	BRV-24-1-CS	CA144	1	1725		7425	7000	6350	5850	5000	3300	1775	---	---
	BPRRV-24-1-1/2-CS	CA196	1-1/2	1540		8200	7900	7650	7280	6850	5500	---	---	---
	BRV-24-2-CS	CA191	2	1600		9760	9114	8830	8460	8090	7000	4400	---	---
	BRV-24-3-CS	CA191	3	1725		10500	9800	9500	9100	8700	7800	5000	3600	---
30	BRV-30-1-CS	CA113	1	1298	45"	9897	8970	7980	6050	4120	---	---	---	---
	BPRRV-30-1-1/2-CS	CA115	1-1/2	1035		11100	10600	9700	8600	7500	3500	---	---	---
	BPRRV-30-2-CS	CA115	2	1176		12100	11660	11000	10121	9322	6700	---	---	---
	BRV-30-3-CS	CA115	3	1350		13480	12982	12498	12042	11465	10380	9470	7500	---
	BRV-30-5-CS	CA115	5	1650		16440	15832	15242	14686	13982	12659	11550	9200	---
34	BRV-34-2-CS	CA190	2	1027	49"	14657	13652	12590	11500	10000	8000	---	---	---
	BRV-34-3-CS	CA190	3	1175		17580	16750	15896	14600	14095	12000	9500	---	---
	BRV-34-5-CS	CA190	5	1416		20500	19800	19000	18325	17500	16000	14200	12250	---
36	BPRRV-36-3-CS	CA198	3	930	51"	17500	16800	15900	14740	14100	12200	---	---	---
	BPRRV-36-5-CS	CA198	5	1100		20600	19950	19200	18500	17800	16020	14300	---	---
	BPRRV-36-7-1/2-CS	CA198	7-1/2	1250		22500	21900	21200	20750	20050	19008	17000	15200	---
42	BPRRV-42-2-CS	CA119	2	820	57"	20700	18900	17002	14700	11400	4000	---	---	---
	BPRRV-42-3-CS	CA119	3	890		23700	22100	20200	18960	16970	9950	3600	---	---
	BPRRV-42-5-CS	CA199	5	850		26900	25600	24403	23450	22250	18400	13900	---	---
	BPRRV-42-7-1/2-CS	CA199	7-1/2	960		30800	29600	28500	27400	26200	23500	20500	16500	---
	BPRRV-42-10-CS	CA199	10	1075		33300	32500	31500	30300	29500	27400	25100	22000	18000
48	BPRRV-48-5-CS	CA195	5	800	63"	33000	31000	29400	27500	25670	20700	---	---	---
	BPRRV-48-7-1/2-CS	CA195	7-1/2	900		37500	35900	34500	32800	31200	27700	23000	---	---
	BPRRV-48-10-CS	CA195	10	1000		41200	39700	38300	36900	35400	32400	29000	24400	---
60	BPRRV-60-5-CS	CA143	5	690	75"	45000	40800	36000	32150	26000	---	---	---	---
	BPRRV-60-7-1/2-CS	CA227	7-1/2	690		51000	49500	47250	43500	39375	30750	21375	16875	12000
	BPRRV-60-10-CS	CA227	10	783		54000	51900	49000	46300	43200	36000	27000	---	---
	BPRRV-60-15-CS	CA227	15	870		61000	59500	57000	55000	49000	46000	40000	32000	---

OPTIONAL ACCESSORIES

- Weatherproof non-fused disconnect switches
- Insulated roof curbs for flat or pitched roofs

MODEL BRV8 – INDUSTRIAL ROOF EXHAUSTER – BELT DRIVE

APPLICATION

Designed for general ventilation in production or warehouse areas where efficient, quiet air flow is required.

FEATURES AND BENEFITS

- Ruggedly constructed steel curb cap including spun venturi section for efficient air flow.
- Heavy gauge fabricated steel propellers are standard.
- Cast aluminum spark-resistant propellers available for hazardous locations.
- Butterfly damper section, mill galvanized construction, with damper blades that open when fan is energized and close weathertight when unit is off. Dampers rotate in nylon bearings on a stainless steel axle.
- Belt driven for quiet operation.
- Industrial grade cast iron pillow block ball bearings with locking collars.

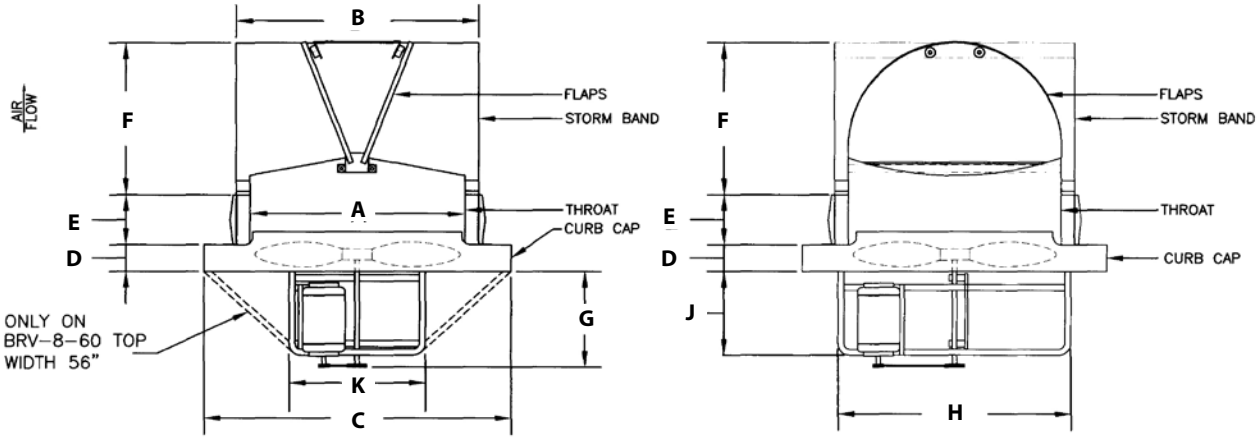

DIMENSIONS (subject to change without notice)

MODEL	A	B	C	D	E	F	G	H	J	K	HP
BRV-824	25″	30″	39″ sq.	2 1/2″	3″	19″	16 3/4″	28″	10 1/2″	15 1/2″	1/3-3/4
BRV-830	31″	36″	45″ sq.	2 1/2″	3″	22″	17 3/4″	34″	10 1/2″	15 1/2″	1/2-1 1/2
BRV-836	37″	42″	51″ sq.	2 1/2″	3″	25″	18 3/4″	39 1/2″	12 1/2″	20 1/4″	1/2-2
BRV-842	43″	48″	57″ sq.	2 1/2″	3″	27″	18 3/4″	45 1/2″	12 1/2″	20 1/4″	3/4-3
BRV-848	49″	54″	63″ sq.	2 1/2″	3″	30″	21 3/4″	51 1/2″	15 1/2″	20 1/4″	3/4-5
BRV-854	55″	60″	69″ sq.	2 1/2″	3″	36″	23 3/4″	57 1/2″	18″	27 1/4″	1-5
BRV-860	61″	66″	75″ sq.	2 1/2″	3″	42″	23 3/4″	63 1/2″	18″	27 1/4″	1 1/2-5

MODEL BRV8 – INDUSTRIAL ROOF EXHAUSTER – BELT DRIVE PERFORMANCE DATA

						CAPACITY C.F.M.			
Blade Dia.	Model	Prop	HP	RPM	Free Air	1/8" SP	1/4" SP	3/8" SP	1/2" SP
24"	BRV-824-1/3	S-24	1/3	780	4900	4222	2807	1576	800
	BRV-824-1/2	S-24	1/2	980	6219	5716	5661	4043	2600
	BRV-824-3/4	S-24	3/4	1140	7090	6648	6144	5518	4413
30"	BRV-830-1/2	S-30	1/2	640	8507	7170	4486	2724	1373
	BRV-830-3/4	S-30	3/4	770	10235	9192	7657	5108	3833
	BRV-830-1	X-30	1	975	10668	9959	8626	6828	5184
	BRV-830-1 1/2	X-30	1 1/2	1140	12473	11867	11112	9656	8135
36"	BRV-836-1/2	S-36	1/2	530	10500	8821	5985	3642	2084
	BRV-836-3/4	S-36	3/4	605	11985	10583	8563	5545	4017
	BRV-836-1	S-36	1	665	13174	11932	10299	7913	5729
	BRV-836-1 1/2	X-36	1 1/2	720	13660	12012	9579	7240	5000
	BRV-836-2	X-36	2	870	16554	15376	14088	11942	9691
42"	BRV-842-3/4	S-42	3/4	435	14040	11530	7633	4847	3311
	BRV-842-1	S-42	1	490	15429	13194	10438	6414	4668
	BRV-842-1 1/2	S-42	1 1/2	550	17420	15421	13117	9980	7289
	BRV-842-2	X-42	2	725	20653	19128	17503	15264	11319
	BRV-842-3	X-42	3	830	23645	22296	20984	19406	17290
48"	BRV-848-3/4	S-48	3/4	370	17339	13700	7389	4238	2244
	BRV-848-1	S-48	1	410	19188	16078	10903	6378	4037
	BRV-848-1 1/2	S-48	1 1/2	465	21731	19010	14991	10950	7081
	BRV-848-2	S-48	2	520	24274	21943	19080	15532	10125
	BRV-848-3	X-48	3	680	28150	25683	23615	20820	16930
	BRV-848-5	X-48	5	800	33160	30900	29290	27380	25000
54"	BRV-854-1	X-54	1	410	23130	20588	17500	11640	9600
	BRV-854-1 1/2	X-54	1 1/2	450	25400	22600	19300	12782	10316
	BRV-854-2	X-54	2	480	27200	24312	20660	13642	11010
	BRV-854-3	X-54	3	550	31213	28722	25830	21730	15420
	BRV-854-5	X-54	5	660	37458	35238	32843	30298	26538
60"	BRV-860-1 1/2	X-60	1 1/2	340	28068	23203	15624	11434	8000
	BRV-860-2	X-60	2	390	32200	26710	17924	13118	9380
	BRV-860-3	X-60	3	450	37183	32356	25324	18705	15013
	BRV-860-5	X-60	5	540	44600	41232	35819	29000	23237

OPTIONAL ACCESSORIES

- Weatherproof non-fused disconnect switches
- Insulated roof curbs for flat or pitched roofs

MODEL AM – INDUSTRIAL ROOF EXHAUSTER – DIRECT DRIVE

APPLICATION

Designed for general ventilation and smoke and fume removal where lower cost and less maintenance are a priority.

FEATURES AND BENEFITS

- Ruggedly constructed steel curb cap including spun venturi section for efficient air flow.
- Cast aluminum spark-resistant propellers are standard and suitable for use in hazardous locations when paired with explosion proof motor.
- Butterfly damper section, mill galvanized construction, with damper blades that open when fan is energized and close weathertight when unit is off. Dampers rotate in nylon bearings on a stainless steel axle.
- Available in 304 or 316 stainless steel construction.

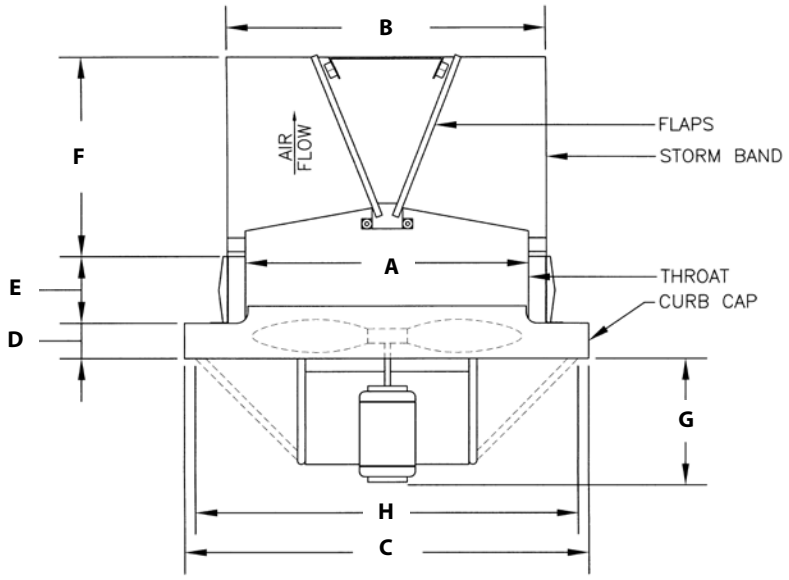

DIMENSIONS (subject to change without notice)

MODEL	A	B	C	D	E	F	G	H	HP
AM-18	19″	24″	33″ sq.	2 1/2″	3″	16″	13″	28″	1/4-1
AM-24	25″	30″	39″ sq.	2 1/2″	3″	19″	15″	34″	1/4-3
AM-30	31″	36″	45″ sq.	2 1/2″	3″	22″	15″	40″	3/4-5
AM-36	37″	42″	51″ sq.	2 1/2″	3″	25″	18″	46″	2-5
AM-42	43″	48″	57″ sq.	2 1/2″	3″	27″	18″	52″	2-5
AM-48	49″	54″	63″ sq.	2 1/2″	3″	30″	20″	58″	3-10
AM-60	61″	66″	75″ sq.	2 1/2″	3″	42″	22″	70″	5-7 1/2

MODEL AM – INDUSTRIAL ROOF EXHAUSTER – DIRECT DRIVE PERFORMANCE DATA

						CAPACITY C.F.M.			
Blade Dia.	Model	Prop	HP	RPM	Free Air	1/8" SP	1/4" SP	3/8" SP	1/2" SP
18"	AML-18-1/4	CA107	1/4	1140	2570	2263	1673	1136	854
	AM-18-1/3	CA232	1/3	1725	3375	3000	2600	2000	1400
	AM-18-1/2	CA161	1/2	1725	4150	3850	3150	2800	1700
	AM-18-1	CA107	1	1725	4600	4375	4080	3600	3000
24"	AM-24-1/4	CA130	1/4	1725	5200	4200	2820	1050	---
	AML-24-3/4	CA114	3/4	1140	6900	6450	6265	5600	3300
	AM-24-1	CA109	1	1725	7425	7000	6350	5850	5000
	AM-24-3	CA114	3	1725	10500	9800	9500	9100	8700
30"	AML-30-3/4	CA113	3/4	1140	10440	9750	8750	7640	6000
	AMLL-30-1	CA115	1	870	10640	10450	9800	9000	7900
	AML-30-1 1/2	CA127	1 1/2	1140	13350	12500	11450	10200	8000
	AML-30-2	CA115	2	1140	14000	13750	12900	11850	10450
	AM-30-3	CA113	3	1725	16000	15350	14700	13850	12900
	AM-30-5	CA127	5	1725	17750	17500	17150	16700	16200
36"	AMLL-36-2	CA163	2	870	17600	16500	15200	13620	11400
	AML-36-2	CA117	2	1140	17620	16500	15200	13620	12300
	AML-36-3	CA221	3	1140	20500	19500	18500	17100	15850
	AML-36-5	CA198	5	1140	21200	20500	19500	18484	17325
42"	AML-42-2	CA165	2	1140	17964	17277	15326	13990	12351
	AMLL-42-5	CA199	5	870	24500	23100	21900	20500	18600
	AML-42-5	CA119	5	1140	28970	27960	26840	25700	24200
48"	AML-48-3	CA137	3	1140	28600	26500	24400	22000	20000
	AMLL-48-5	CA138	5	870	33000	31500	29750	27650	25300
	AMLL-48-7 1/2	CA195	7 1/2	870	35654	33411	31857	30219	28021
	AML-48-7 1/2	CA139	7 1/2	1140	37000	35100	32800	30600	28000
	AMLL-48-10	CA140	10	870	46000	44000	41000	39000	36000
	AML-48-10	CA138	10	1140	41000	39200	38300	37000	35400
60"	AMLL60-5	CA169	5	870	45200	41500	37000	33000	26000
	AMLL60-7 1/2	CA228	7 1/2	870	47000	45500	43600	41000	38700

OPTIONAL ACCESSORIES

- Weatherproof non-fused disconnect switches
- Insulated roof curbs for flat or pitched roofs

MODEL 1900B – INDUSTRIAL ROOF VENTILATOR – BELT DRIVE

APPLICATION

Designed for general ventilation needs. Available for intake or exhaust air flow and belt driven or direct driven construction.

FEATURES AND BENEFITS

- Heavy gauge continuously welded curb cap provides watertight construction.
- Standard construction includes rugged fabricated steel propellers; non-sparking cast aluminum propellers available for hazardous locations.
- Standard construction is belt driven but is also available in direct drive if required.
- Can be built for supply or exhaust with special reversible propeller.
- Fabricated aluminum weather hood with removable birdscreen. Easily opened and fully supported in place for full access to fan inside.

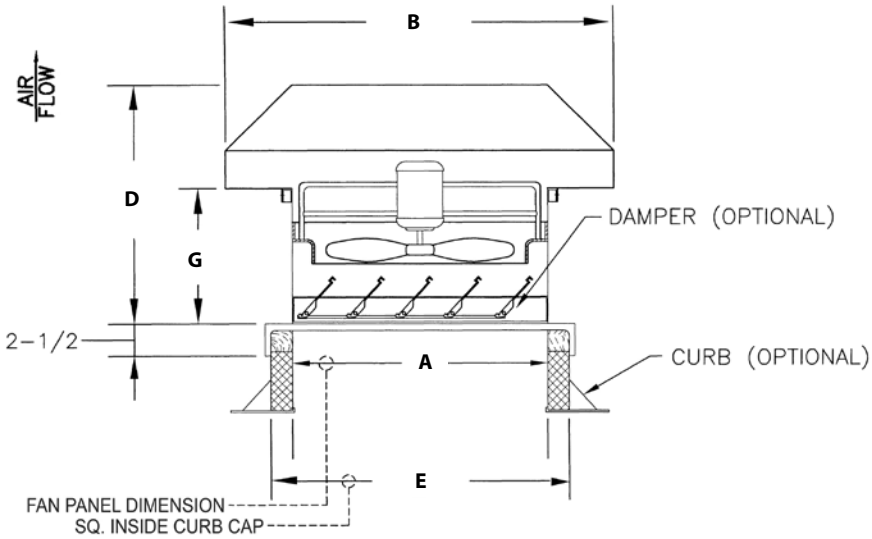

**Fan shown in exhaust configuration.*

DIMENSIONS (subject to change without notice)

MODEL	A	B	D	E	G	HP
1924	30″	54″ x 64″	41 1/2″	39″	25 1/2″	1/4-1
1930	36″	60″ x 76″	41 1/2″	45″	25 1/2″	1/3-1 1/2
1936	42″	72″ x 82″	45 1/2″	51″	27 1/2″	1/3-2
1942	48″	80″ x 89″	45 1/2″	57″	27 1/2″	1/2-3
1948	54″	87″ x 95″	49 1/2″	63″	29 1/2″	3/4-5
1954	60″	92″ x 98″	50 1/2″	69″	29 1/2″	1-5
1960	66″	90″ x 107″	54 1/2″	75″	31 1/2″	1-7 1/2

MODEL 1900B – INDUSTRIAL ROOF VENTILATOR – BELT DRIVE PERFORMANCE DATA

						CAPACITY C.F.M.		
Blade Dia.	Model	Prop	HP	RPM	Free Air	1/8" SP	1/4" SP	3/8" SP
24"	1924-B-1/4	S24	1/4	780	4222	2807	1576	800
	1924-B-1/2	S24	1/2	980	5716	5061	4043	2600
	1924-B-3/4	S24	3/4	1140	6648	6144	5518	4413
	1924-B-1	X24	1	1250	6696	6271	5600	4464
30"	1930-B-1/3	S30	1/3	595	6380	3617	1808	767
	1930-B-1/2	S30	1/2	640	7170	4486	2724	1373
	1930-B-3/4	S30	3/4	770	9192	7657	5108	3833
	1930-B-1	X30	1	975	9959	8626	6828	5184
	1930-B-1 1/2	X30	1 1/2	1140	11867	11112	9656	8135
36"	1936-B-1/3	S36	1/3	460	6992	3722	1825	---
	1936-B-1/2	S36	1/2	530	8821	5985	3642	2084
	1936-B-3/4	S36	3/4	605	10583	8563	5545	4017
	1936-B-1	S36	1	665	11932	10299	7913	5729
	1936-B-1 1/2	X36	1 1/2	720	12012	9579	7240	5000
	1936-B-2	X36	2	870	15376	14088	11942	9691
42"	1942-B-1/2	S42	1/2	390	9352	4957	3050	1642
	1942-B-3/4	S42	3/4	435	11530	7633	4847	3311
	1942-B-1	S42	1	490	13194	10438	6414	4668
	1942-B-1 1/2	S42	1 1/2	550	15421	13117	9980	7289
	1942-B-2	X42	2	725	19128	17503	15264	11319
	1942-B-3	X42	3	830	22296	20984	19406	17290
48"	1948-B-3/4	S48	3/4	370	13700	7389	4283	2244
	1948-B-1	S48	1	410	16078	10908	6378	4037
	1948-B-1 1/2	S48	1 1/2	465	19010	14991	10950	7081
	1948-B-2	S48	2	520	21943	19080	15532	10125
	1948-B-3	X48	3	680	25683	23615	20820	16930
	1948-B-5	X48	5	800	30900	29290	27380	25000
54"	1954-B-1	X54	1	410	20588	17500	11640	9600
	1954-B-1 1/2	X54	1 1/2	450	22600	19300	12782	10316
	1954-B-2	X54	2	480	24312	20660	13642	11010
	1954-B-3	X54	3	550	28722	25830	21730	15420
	1954-B-5	X54	5	660	35238	32843	30298	26538
60"	1960-B-1	X60	1	280	19161	12850	---	---
	1960-B-1 1/2	X60	1 1/2	340	23283	15624	11434	8000
	1960-B-2	X60	2	390	26710	17924	13118	9380
	1960-B-3	X60	3	450	32356	25324	18705	15013
	1960-B-5	X60	5	540	41232	35819	29000	23237
	1960-B-7 1/2	X60	7 1/2	610	47000	43000	40000	32000

OPTIONAL ACCESSORIES

- Gravity, counterbalanced or motorized dampers
- Weatherproof non-fused disconnect switches
- Insulated roof curbs for flat or pitched roofs
- Filter box section for intake units (reduced CFM)

MODEL ADB – CAST ALUMINUM VOLUME BLOWER – DIRECT DRIVE

APPLICATION

Designed for use in situations where low volumes of air flow are required at relatively low static pressures. Excellent for removal of welding smoke and fumes and for spot cooling of electronic equipment.

FEATURES AND BENEFITS

- Cast aluminum spark resistant housings.
- Forward curved squirrel cage type steel wheels provide efficient, quiet performance.
- Round outlets and inlets facilitate connection to standard pipe and duct diameters with slip fit connections or flange to flange.
- Standard construction is clockwise rotation with four discharge positions available.
- Standard construction meets AMCA Type C spark resistant requirements.
- Suitable for use in airstreams to a maximum of 150˚F.

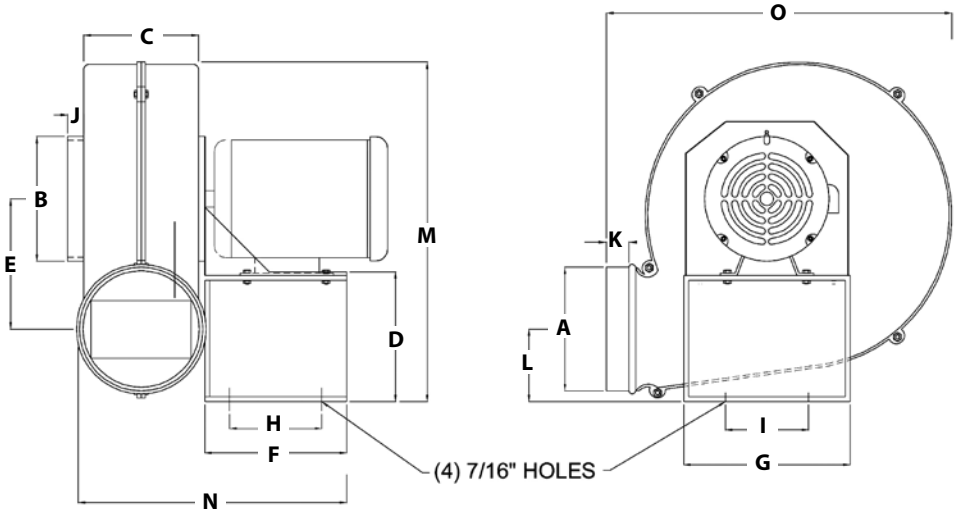

DIMENSIONS (subject to change without notice)

MODEL	A	B	C	D	E	F	G	H	I	J	K	L	M	N	O
ADB-4	4″	4 7/8″	4″	5″	2 3/4″	7″	6 7/8″	4 5/16″	4 1/4″	15/16″	15/16″	5 3/4″	12 1/2″	13 1/8″	9 1/8″
ADB-6	6″	5 7/8″	4 5/8″	5″	4 1/4″	7″	6 7/8″	4 5/16″	4 1/4″	1 1/16″	7/8″	4 1/4″	13 1/2″	14 1/4″	11 3/4″
ADB-8	7 7/8″	7 13/16″	5 3/4″	7 15/16″	5 3/8″	8 1/2″	8 3/8″	6 1/2″	6 1/2″	1 1/8″	15/16″	5 5/8″	17 7/8″	16 5/8″	14″

MODEL ADB – CAST ALUMINUM VOLUME BLOWER – DIRECT DRIVE PERFORMANCE DATA

			CAPACITY C.F.M.																			
MODEL	WHEEL DIA.	RPM	1/4" SP CFM & BHP		1/2" SP CFM & BHP		3/4" SP CFM & BHP		1" SP CFM & BHP		1-1/2" SP CFM & BHP		2" SP CFM & BHP		2-1/2" SP CFM & BHP		3" SP CFM & BHP		3-1/2" SP CFM & BHP		4" SP CFM & BHP	
ADB4	4-3/4"	1725	210	.035	135	.023	—	—	—	—	—	—	—	—	—	—	—	—	—	—	—	—
HADB4	4-3/4"	3450	500	.38	470	.34	440	.32	420	.30	360	.26	260	.16	—	—	—	—	—	—	—	—
LADB6	6-1/4"	1140	248	.06	96	.02	—	—	—	—	—	—	—	—	—	—	—	—	—	—	—	—
ADB6	6-1/4"	1725	440	.18	370	.14	300	.11	—	—	—	—	—	—	—	—	—	—	—	—	—	—
HADB6	6-1/4"	3450	900	1.45	870	1.40	850	1.35	820	1.30	780	1.20	730	1.15	660	1.00	580	.90	470	.80	390	.70
LADB8	8-1/2"	1140	860	.26	720	.18	600	.15	—	—	—	—	—	—	—	—	—	—	—	—	—	—
ADB8	8-1/2"	1725	1550	1.15	1500	1.05	1490	1.00	1400	.90	1200	.85	950	.70	—	—	—	—	—	—	—	—

OPTIONAL ACCESSORIES

- Cast aluminum inlet or outlet flanges
- Slide gate dampers for inlet or outlet
- Motor weather cover for outdoor service
- Inlet filters
- Inlet and outlet guards

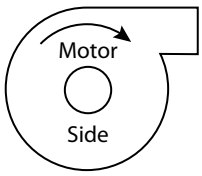

Clockwise Top Horizontal Discharge

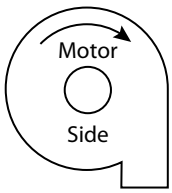

Clockwise Down-Blast Discharge

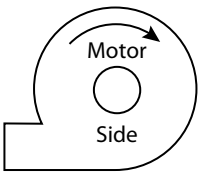

Clockwise Bottom Horizontal Discharge

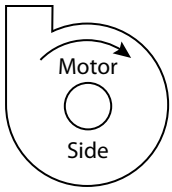

Clockwise Up-Blast Discharge

MODEL HADP – CAST ALUMINUM PRESSURE BLOWER – DIRECT DRIVE

APPLICATION

Designed for use in situations requiring moderate CFM movement against relatively high static pressure systems. Excellent for fume exhaust, mounted on dust collectors, non-abrasive material conveying, vehicle exhaust removal in garages and fire departments, air source for air knives, and combustion air for gas burners.

FEATURES AND BENEFITS

- Cast aluminum housing and wheels are naturally non-sparking and meet AMCA Type B spark resistant construction.
- Round outlets and inlets facilitate connection to standard pipe and duct diameters with slip fit connections or flange to flange.
- Six housing sizes and multiple wheel diameters provide a wide range of available performance ratings.
- Suitable for use in airstreams to a maximum of 150˚F.
- Most sizes available in clockwise or counter-clockwise rotation with eight different discharge positions.
- Standard motor is industrial duty TEFC enclosure. Explosion proof motors are available for hazardous locations.

DIMENSIONS (subject to change without notice)

MODEL	MOTOR FRAME	C	D	F	G	H	J	M	N	O	P	R	S	T	U	AA	CC	DD
HADP-8	56	1 1/4″	3 3/4″	6″	4 1/4″	5 1/2″	3 1/8″	4 1/8″	1 3/8″	4 1/2″	5 1/4″	6 1/4″	4 3/4″	1″	3 1/2″	4″	14″	4″
HADP-9	56-143T-145T	1 1/4″	3 3/4″	6″	4 1/4″	5 1/2″	3 1/8″	5 5/8″	1 3/8″	5 7/8″	7″	7 3/4″	6 3/8″	1″	3 1/2″	5″	14″	4″
HADP-10	56	1 1/4″	4 1/4″	7″	4 1/2″	5 1/2″	3 7/16″	6 9/16″	1″	6 7/8″	9 7/16″	9″	7 13/16″	1″	3 1/2″	6″	14 1/2″	5″
	143T-145T																	
HADP-12	56-143T-145T	1 5/16″	4 1/4″	8″	4 1/2″	5 1/2″	3 3/8″	7 3/8″	1 1/8″	7 5/8″	9 1/16″	10 3/16″	7 9/16″	1″	3 1/2″	7″	14 1/2″	6″
	182T-184T			7″	4 7/8″	8 3/4″									4 7/8″		18 1/4″	
HADP-14	143T-145T	1 5/8″	5 1/4″	9 1/2″	5 1/4″	5 1/2″	4 1/8″	8″	1″	8 5/8″	9 7/8″	11 1/4″	9 1/2″	1″	3 1/2″	8″	15″	6″
	182T-184T			8 1/2″	5 7/8″	8 3/4″									4 7/8″		18 1/2″	
HADP-15	182T-184T	1 7/16″	6″	9″	6″	8 3/4″	4 3/8″	8″	1 3/4″	9 3/8″	10 7/8″	11 15/16″	9 15/16″	1″	4 7/8″	10″	20 3/8″	8″
	213T-215T																	
	182T-184T															8″		
	213T-215T																	

OPTIONAL ACCESSORIES

- Cast aluminum inlet or outlet flanges
- Slide gate dampers for inlet or outlet
- Teflon shaft seal
- Motor weather cover for outdoor service
- Epoxy coating for corrosive environments
- Inlet filters
- Inlet and outlet guards

MODEL HADP – CAST ALUMINUM PRESSURE BLOWER – DIRECT DRIVE
PERFORMANCE DATA

				CAPACITY C.F.M.												
MODEL	WHEEL DIA.	INLET	OUTLET	1" SP CFM & BHP		3" SP CFM & BHP		5" SP CFM & BHP		7" SP CFM & BHP		9" SP CFM & BHP		11" SP CFM & BHP		ROTATION
HADP8-1/3	8 x 2 3/4	4"	4"	345	.37	242	.31									CW ONLY
HADP9-1/2	8 x 2 3/4	5"	4"	380	.39	275	.30									CCW ONLY
HADP9-3/4	9 x 2 7/8	5"	4"	480	.62	380	.57	210	.42							CCW ONLY
HADP9-1	10 1/2 x 2 7/8	5"	4"	575	.80	495	.72	400	.54	270	.41					CCW ONLY
HADP10-3/4	9 x 2 7/8	6"	5"	571	.73	400	.60	91	.37							CW or CCW
HADP10-1 1/2	11 x 2 3/4	6"	5"	840	1.50	700	1.35	590	1.26	460	1.05					CW or CCW
HADP12-1	11 x 3 BC	7"	6"	865	1.07	710	.99	535	.87	160	.55					CW ONLY
HADP12-1 1/2	10 1/2 x 2 7/8	7"	6"	1055	1.62	890	1.42	670	1.20	360	.77					CW or CCW
HADP12-2	11 x 2 3/4	7"	6"	1150	1.91	975	1.72	750	1.40	475	1.05					CW or CCW
HADP12-3A	11 1/2 x 2 3/4	7"	6"	1245	2.48	1086	2.20	890	2.00	630	1.53					CW or CCW
HADP12-3B	12 3/4 x 2 7/8	7"	6"			1237	3.10	1046	2.81	882	2.50	700	1.91			CW or CCW
HADP12-5	14 x 3	7"	6"	1600	4.21	1550	4.00	1400	3.78	1285	3.63	1125	3.40	945	2.81	CW or CCW
HADP14-3	12 1/4 x 3	8"	6"	1575	3.40	1405	3.11	1250	2.71	1000	2.21	685	1.90			CW or CCW
HADP14-5	14 x 3	8"	6"	1875	4.98	1710	4.60	1550	4.15	1400	3.80	1203	3.50	1045	2.98	CW or CCW
HADP15-5	14 x 3	8"	8"	2300	5.30	2100	4.95	1900	4.50	1678	4.10	1410	3.60	1170	3.21	CW or CCW
HADP15-7 1/2	15 1/2 x 5 BC	8"	8"	2360	6.50	2210	6.00	1950	5.32	1800	4.65	1595	4.10	1300	3.70	CW or CCW
HADP15-10A	15 1/2 x 5	8"	8"	2700	9.40	2510	8.90	2365	7.95	2211	7.00	1950	6.20	1711	5.90	CW or CCW
HADP15-10B	16 1/2 x 5	8"	8"	3000	11.00	2875	10.70	2700	10.40	2550	10.20	2400	9.90	2215	9.40	CW or CCW
HADP15	14 x 3	10"	8"	2565	6.20	2347	5.80	2175	5.30	1841	4.60	1586	4.00	1181	3.20	CW or CCW
HADP15	15 1/2 x 5 BC	10"	8"	2610	7.10	2420	6.50	2210	6.00	1975	5.50	1712	4.95	1425	4.10	CW or CCW
HADP15	15 1/2 x 5	10"	8"	3211	11.20	3108	10.90	2875	10.40	2743	9.70	2501	8.60	2184	7.00	CW or CCW
HADP15	16 1/2 x 5	10"	8"	3410	14.00	3230	13.00	3029	12.20	2850	11.60	2669	10.80	2561	10.20	CW or CCW

NOTE: All models run at 3450 RPM.

FF	HH	JJ
9 1/2"	7 7/8"	9 1/2"
9 1/2"	7 7/8"	9 1/2"
10 1/2"	7 7/8"	7"
		9"
11 1/2"	7 7/8"	9 1/2"
	11 3/8"	12 1/2"
13"	7 7/8"	9 1/2"
	11 3/8"	12 1/2"
13 1/2"	11 3/8"	12 1/2"
14 1/4"		
13 1/2"		
14 1/4"		

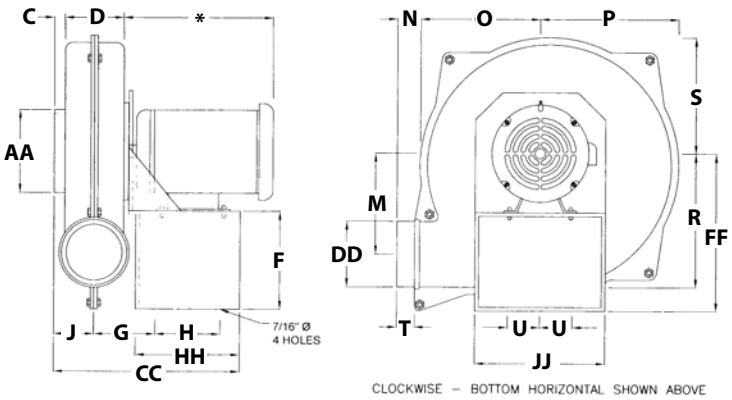

**Dimensions vary with motor.*

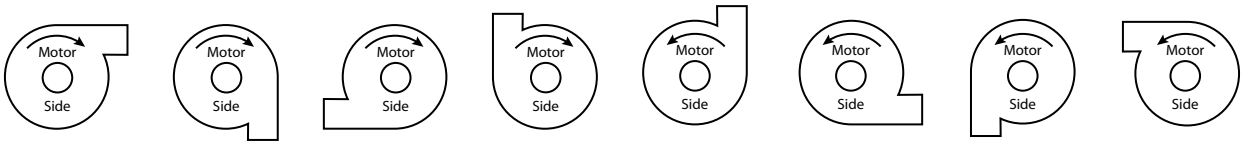

Clockwise Top Horizontal Discharge | Clockwise Down-Blast Discharge | Clockwise Bottom Horizontal Discharge | Clockwise Up-Blast Discharge | Counter Clockwise Up-Blast Discharge | Counter Clockwise Bottom Horizontal Discharge | Counter Clockwise Down-Blast Discharge | Counter Clockwise Top Horizontal Discharge

MAN & PRODUCT COOLER – DIRECT DRIVE

LOW STAND

APPLICATION

Provides portable cooling for personnel or processes. Heavy duty construction provides many years of service in demanding industrial locations such as steel mills, foundries, factories and warehouses.

FEATURES AND BENEFITS

- Front & rear OSHA style concentric circle wire guards on all sizes except 60″ which is ½″ wire mesh.
- Rugged spark-resistant cast aluminum propellers are standard.
- Industrial grade TEFC motors are standard.
- Explosion proof motors available for hazardous locations.
- Available in low, medium or high stands to meet varied centerline height requirements.
- Medium and high stand fans rotate 180 degrees on their center mount axis.
- All models have cord wired to motor and extended through fan housing except explosion proof fans.

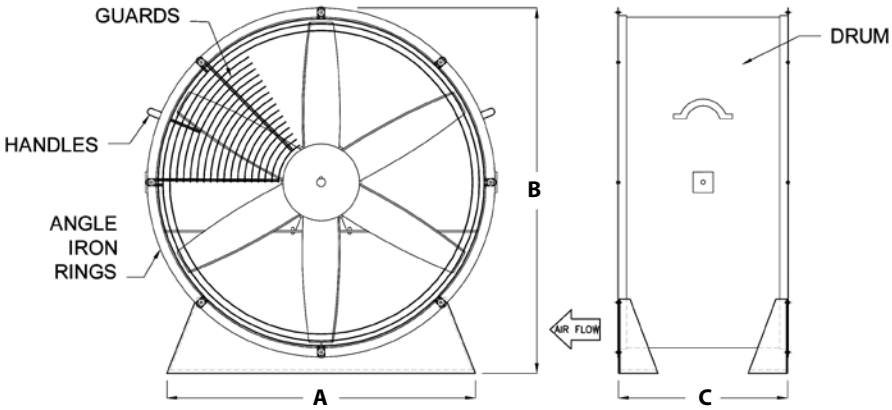

DIMENSIONS (subject to change without notice)

SIZE	A	B	C	HP
18″	18″	21 1/2″	20″	1/4-1
24″	24″	27 1/2″	20″	1/4-3
30″	27″	33 1/2″	20″	1/3-3
36″	30″	39 1/2″	24″	1-5
42″	34″	45 1/2″	24″	2-5
48″	36″	52″	28″	5-10
60″	42″	64″	36″	7 1/2-15

Man & Product Coolers

MEDIUM STAND

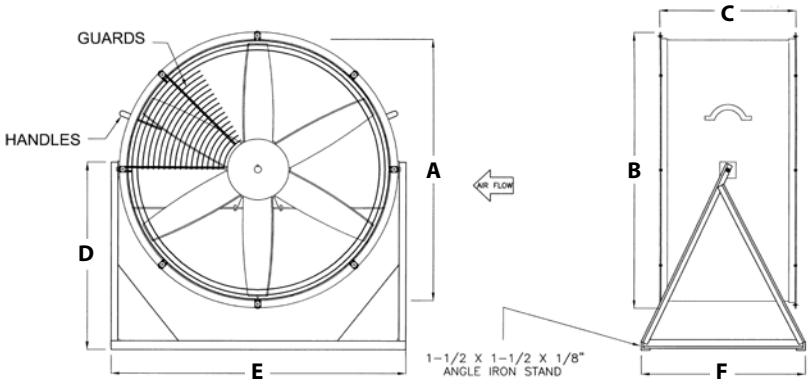

DIMENSIONS (subject to change without notice)

SIZE	A	B	C	D	E	F	HP
18″	18″	20″	20″	28″	23 1/2″	32″	1/4-1
24″	24″	26″	20″	28″	29 1/2″	32″	1/4-3
30″	30″	32″	20″	28″	35 1/2″	32″	1/3-3
36″	36″	38″	24″	28″	41 1/2″	32″	1-5
42″	42″	44″	24″	28″	47 1/2″	32″	2-5
48″	48″	51″	28″	36″	53 1/2″	32″	5-10
60″	60″	63″	36″	56″	67″	56″	7 1/2-15

HIGH STAND

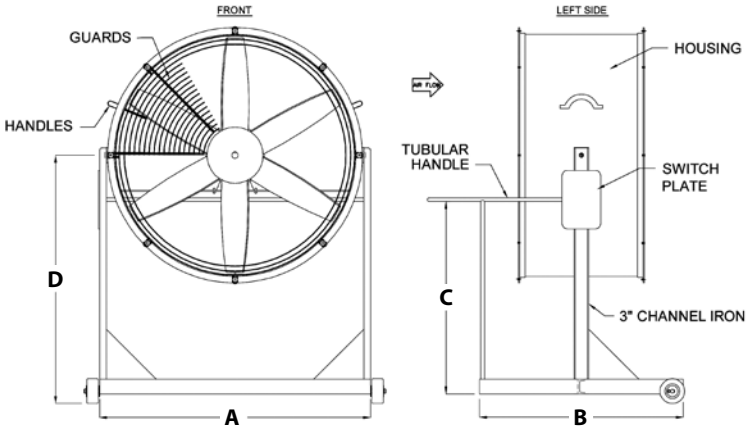

DIMENSIONS (subject to change without notice)

SIZE	A	B	C	D	HP
18″	23″	30″	25″	42″	1/4-1
24″	29″	30″	25″	42″	1/4-3
30″	35″	30″	25″	42″	1/3-3
36″	41″	30″	25″	42″	1-5
42″	47″	30″	25 1/2″	42″	2-5
48″	53″	30″	25 1/2″	42″	5-10
60″	65″	50″	25 1/2″	56″	7 1/2-15

MAN & PRODUCT COOLER – DIRECT DRIVE

ONE-WAY
SWIVEL YOKE

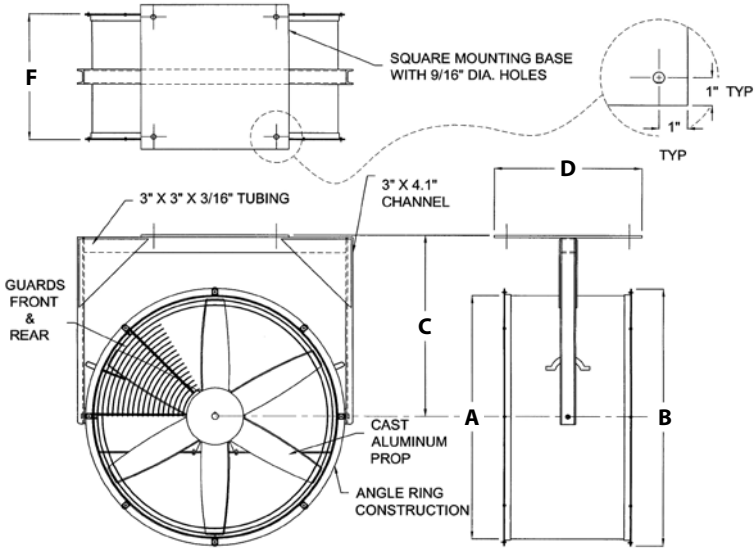

DIMENSIONS (subject to change without notice)

SIZE	A	B	C	D	F	HP
18″	18″	20″	20″	15″	20″	1/4-1
24″	24″	26″	21 1/2″	15″	20″	1/4-3
30″	30″	32″	25 1/2″	15″	20″	1/3-3
36″	36″	38″	29 1/2″	18″	24″	1-5

NOTE: Consult factory for larger fan sizes.

TWO-WAY
SWIVEL YOKE

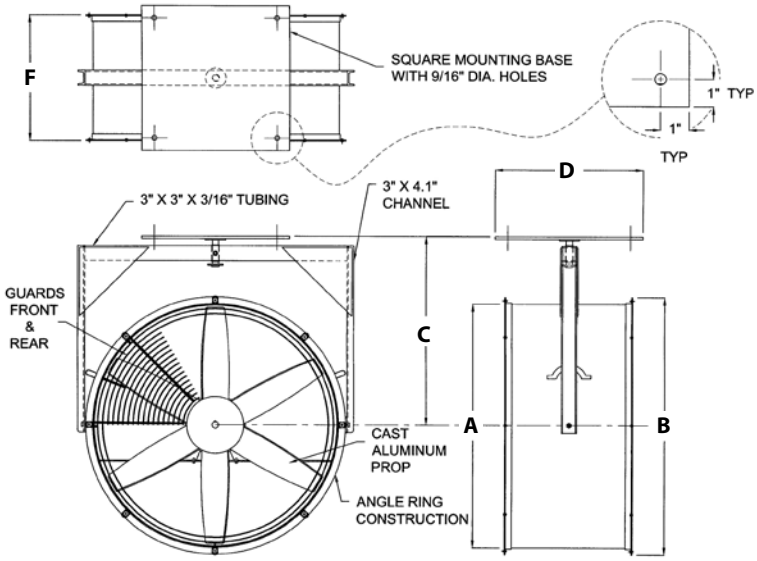

DIMENSIONS (subject to change without notice)

SIZE	A	B	C	D	F	HP
18″	18″	20″	20″	15″	20″	1/4-1
24″	24″	26″	21 1/2″	15″	20″	1/4-3
30″	30″	32″	25 1/2″	15″	20″	1/3-3
36″	36″	38″	29 1/2″	18″	24″	1-5

NOTE: Consult factory for larger fan sizes.

MAN & PRODUCT COOLER – CAST ALUMINUM – DIRECT DRIVE PERFORMANCE DATA

	MODEL NUMBERS									
Blade Dia.	Low Stand	Medium Stand	High Stand	1-Way Swivel	2-Way Swivel	Prop	HP	RPM	C.F.M. Air Del.	DB.
18"	18DA1/4-L	18DA1/4-M	18DA1/4-H	18DA1/4-1Y	18DA1/4-2Y	CA105	1/4	1725	3050	74
	18DA1/3-L	18DA1/3-M	18DA1/3-H	18DA1/3-1Y	18DA1/3-2Y	CA232	1/3	1725	3450	76
	18DA1-L	18DA1-M	18DA1-H	18DA1-1Y	18DA1-2Y	CA107	1	1725	4600	77
24"	24DA1/4-L	24DA1/4-M	24DA1/4-H	24DA1/4-1Y	24DA1/4-2Y	CA130	1/4	1725	5200	80
	24DAL1/3-L	24DAL1/3-M	24DAL1/3-H	24DAL1/3-1Y	24DAL1/3-2Y	CA109	1/3	1140	5300	74
	24DA1/2-L	24DA1/2-M	24DA1/2-H	24DA1/2-1Y	24DA1/2-2Y	CA108	1/2	1725	6000	80
	24DAL1/2-L	24DAL1/2-M	24DAL1/2-H	24DAL1/2-1Y	24DAL1/2-2Y	CA236	1/2	1140	6000	75
	24DAL3/4-L	24DAL3/4-M	24DAL3/4-H	24DAL3/4-1Y	24DAL3/4-2Y	CA191	3/4	1140	6900	74
	24DA1-L	24DA1-M	24DA1-H	24DA1-1Y	24DA1-2Y	CA109	1	1725	7400	82
	24DA1 1/2-L	24DA1 1/2-M	24DA1 1/2-H	24DA1 1/2-1Y	24DA1 1/2-2Y	CA236	1 1/2	1725	8200	84
	24DA3-L	24DA3-M	24DA3-H	24DA3-1Y	24DA3-2Y	CA191	3	1725	10500	87
30"	30DAL1/3-L	30DAL1/3-M	30DAL1/3-H	30DAL1/3-1Y	30DAL1/3-2Y	CA167	1/3	1140	6900	80
	30DA1/2-L	30DA1/2-M	30DA1/2-H	30DA1/2-1Y	30DA1/2-2Y	CA112	1/2	1725	8900	86
	30DAL3/4-L	30DAL3/4-M	30DAL3/4-H	30DAL3/4-1Y	30DAL3/4-2Y	CA113	3/4	1140	10400	80
	30DAL1-L	30DAL1-M	30DAL1-H	30DAL1-1Y	30DAL1-2Y	CA207	1	1140	11200	80
	30DA1 1/2-L	30DA1 1/2-M	30DA1 1/2-H	30DA1 1/2-1Y	30DA1 1/2-2Y	CA132	1 1/2	1725	12000	92
	30DAL2-L	30DAL2-M	30DAL2-H	30DAL2-1Y	30DAL2-2Y	CA115	2	1140	14000	84
	30DA3-L	30DA3-M	30DA3-H	30DA3-1Y	30DA3-2Y	CA113	3	1725	16000	94
36"	36DAL1-L	36DAL1-M	36DAL1-H	36DAL1-1Y	36DAL1-2Y	CA134	1	1140	13000	82
	36DA1 1/2-L	36DA1 1/2-M	36DA1 1/2-H	36DA1 1/2-1Y	36DA1 1/2-2Y	CA133	1 1/2	1725	14850	88
	36DAL2-L	36DAL2-M	36DAL2-H	36DAL2-1Y	36DAL2-2Y	CA117	2	1140	17500	82
	36DA3-L	36DA3-M	36DA3-H	36DA3-1Y	36DA3-2Y	CA134	3	1725	18500	90
	36DAL3-L	36DAL3-M	36DAL3-H	36DAL3-1Y	36DAL3-2Y	CA221	3	1140	20500	84
	36DA5-L	36DA5-M	36DA5-H	36DA5-1Y	36DA5-2Y	CA117	5	1725	23000	94
42"	42DAL2-L	42DAL2-M	42DAL2-H	---	---	CA165	2	1140	19500	86
	42DA5-L	42DA5-M	42DA5-H	---	---	CA165	5	1725	27000	98
	42DAL5-L	42DAL5-M	42DAL5-H	---	---	CA119	5	1140	27000	86
48"	48DAL5-L	48DAL5-M	48DAL5-H	---	---	CA185	5	1140	32000	92
	48DALL5-L	48DALL5-M	48DALL5-H	---	---	CA138	5	870	33000	86
	48DAL7 1/2-L	48DAL7 1/2-M	48DAL7 1/2-H	---	---	CA139	7 1/2	1140	37000	105
	48DAL10-L	48DAL10-M	48DAL10-H	---	---	CA138	10	1140	41000	105
	48DALL10-L	48DALL10-M	48DALL10-H	---	---	CA195	10	870	39000	87
60"	60DALL-7 1/2-L	60DALL-7 1/2-M	60DALL-7 1/2-H	---	---	CA228	7 1/2	870	47000	91
	60DALL-10-L	60DALL-10-M	60DALL-10-H	---	---	CA143	10	870	57200	92
	60DALL-15-L	60DALL-15-M	60DALL-15-H	---	---	CA227	15	870	60750	93

NOTE: Consult factory for optional steel propeller performance data.

OPTIONAL ACCESSORIES

- Caster sets which include two fixed and two swivel locking casters.
- Manual starting switches with built-in overload protection, mounted & wired for fans with TEFC motors only.
- Coatings available for outdoor service or harsh environments.
- Belt drive configuration.
- Fabricated steel propellers.

30 D A 3 H

SIZE
DIRECT DRIVEN
TYPE PROPELLER
H.P.
TYPE STAND

L in Model Number = 1140 RPM Motors
LL in Model Number = 870 RPM Motors

Propellers

Americraft cast aluminum propellers are uniquely designed to prevent overloading across the static range. All cast propellers are precision balanced in our factory. Many different blade and hub styles are used to best meet all customer needs.

Those propellers with an asterisk in the performance chart are for use on belt driven fans. They are shown in the ratings at speeds other than motor speeds or the hub sections are not designed for direct driven fans.

When ordering cast aluminum propellers, please specify the bore size and the exact diameter of the propeller you desire. The propellers shown are usually trimmed to fit inside the fan drum or ring and therefore are slightly less in diameter than the sizes listed. Full sizes can be obtained by specifiying the exact diameter required.

Note: Consult Americraft for applications with static pressures above 1.25" S.P. W.G.

							CAPACITY C.F.M.									
Blade Dia.	Prop	HP	RPM	# Blades	Type	Free Air	1/8" SP	1/4" SP	3/8" SP	1/2" SP	3/4" SP	1" SP	1-1/4" SP	1-1/2" SP	1-3/4" SP	2" SP
12"	CA101	1/4	1725	4		1180	930	520	---	---	---	---	---	---	---	---
	CA101	1/4	2625	4	*	1444	1307	1033	638	380	---	---	---	---	---	---
	CA101	1/3	2875	4	*	1586	1436	1135	700	415	---	---	---	---	---	---
	CA101	1/2	3450	4		1875	1650	1400	1320	1250	1100	660	---	---	---	---
	CA102	3/4	3450	6		2044	1960	1920	1820	1650	1500	1100	---	---	---	---
15"	CA103	1/4	2000	6	*	2600	2100	1700	---	---	---	---	---	---	---	---
	CA103	1/3	2200	6	*	2950	2500	2100	1760	1000	---	---	---	---	---	---
	CA264	1/2	1890	6	*	3350	3000	2650	2200	1500	---	---	---	---	---	---
	CA264	3/4	2200	6	*	3900	3700	3400	3100	2700	1150	---	---	---	---	---
	CA264	1	2400	6	*	4250	4000	3700	3375	2950	1250	---	---	---	---	---
16"	CA160	1/4	1140	6		2100	1700	500	---	---	---	---	---	---	---	---
	CA159	1/4	1725	6		2800	2400	2000	1400	700	---	---	---	---	---	---
	CA203	1 1/2	3450	4		5000	4900	4800	4700	4600	4400	---	---	---	---	---
18"	CA235	1/4	1600	6	*	3050	2500	2000	1200	---	---	---	---	---	---	---
	CA235	1/3	1725	6	*	3375	3000	2600	2000	1400	---	---	---	---	---	---
	CA232	1/3	1725	6		3375	3000	2600	2000	1400	---	---	---	---	---	---
	CA105	1/4	1725	4		3450	3050	2500	1200	---	---	---	---	---	---	---
	CA235	1/2	1890	6	*	3850	3500	3100	2500	2000	---	---	---	---	---	---
	CA107	3/4	1600	6	*	4100	3985	3440	3050	2500	---	---	---	---	---	---
	CA161	1/2	1725	6		4150	3850	3150	2800	1700	---	---	---	---	---	---
	CA107	1	1725	6		4600	4375	4080	3600	3000	2100	1550	---	---	---	---
	CA107	1 1/2	1990	6	*	5350	5060	4830	4550	3950	3000	2500	---	---	---	---
	CA202	2	3450	4		5800	5700	5600	5400	5200	5000	4000	---	---	---	---
	CA177	3	3450	6		6600	6350	6000	5750	5500	5200	4600	4100	3500	---	---
20"	CA184	1/4	1140	4		2800	2560	2380	1400	---	---	---	---	---	---	---
	CA149	1/4	1725	4		3720	3160	2510	1650	---	---	---	---	---	---	---
	CA150	1/2	1140	6		4750	4400	3900	3000	600	---	---	---	---	---	---
	CA148	1/2	1725	6		4800	4450	3950	3340	2500	---	---	---	---	---	---
	CA180	1	1725	6		6900	6600	6200	5900	5500	3700	850	---	---	---	---
24"	CA173	1/4	1140	6		4600	4200	3400	1600	---	---	---	---	---	---	---
	CA109	1/3	1140	6		4975	4690	4250	3920	2850	---	---	---	---	---	---
	CA130	1/4	1725	2		5200	4200	2820	1050	---	---	---	---	---	---	---
	CA144	1/2	1298	6	*	5643	5320	4826	4440	3500	---	---	---	---	---	---
	CA108	1/2	1725	4		6510	5880	5200	4150	3100	1800	---	---	---	---	---
	CA236	1/2	1140	6		6840	6100	5170	1900	---	---	---	---	---	---	---
	CA114	3/4	1140	6		6900	6450	6265	5600	3300	---	---	---	---	---	---
	CA173	3/4	1725	6		6900	6510	5900	5440	4650	2750	---	---	---	---	---
	CA144	3/4	1600	6	*	6906	6510	5900	5440	4650	2750	---	---	---	---	---
	CA144	1	1725	6	*	7425	7000	6350	5850	5000	3300	1775	---	---	---	---
	CA109	1	1725	6		7425	7000	6350	5850	5000	3300	1775	---	---	---	---
	CA196	1	1357	6	*	7450	7100	6650	5950	5200	3000	---	---	---	---	---
	CA144	1 1/2	1890	6	*	8167	7700	7000	6435	5500	3650	1950	---	---	---	---
	CA236	1 1/2	1725	6		8200	7700	7250	6500	5500	3500	1125	---	---	---	---
	CA196	1 1/2	1540	6	*	8200	7900	7650	7280	6850	5500	---	---	---	---	---
	CA162	2	1725	6		9525	9196	8810	8360	7980	6960	3000	---	---	---	---
	CA196	2	1680	6	*	9600	9250	8940	8655	8250	7300	4800	---	---	---	---
	CA191	2	1600	6	*	9760	9114	8830	8460	8090	7000	4400	---	---	---	---
	CA191	3	1725	6	*	10500	9800	9500	9100	8700	7800	5000	3600	2000	---	---
	CA114	3	1725	6		10500	9800	9500	9100	8700	7800	5000	3600	2000	---	---
	CA191	5	1920	6	*	11400	10600	10350	9900	9475	8500	7200	6000	5000	---	---

** Designates belt driven models.*

Propellers

							CAPACITY C.F.M.									
Blade Dia.	Prop	HP	RPM	# Blades	Type	Free Air	1/8" SP	1/4" SP	3/8" SP	1/2" SP	3/4" SP	1" SP	1-1/4" SP	1-1/2" SP	1-3/4" SP	2" SP
27"	CA121	1/2	1725	4		7550	6820	6000	5100	4000	2000	---	---	---	---	---
	CA111	3/4	1250	6	*	8330	7814	7550	7070	6500	4650	---	---	---	---	---
	CA110	3/4	1600	4	*	8900	8370	7800	7230	6550	4100	---	---	---	---	---
	CA111	1	1400	6	*	9400	8675	8480	7950	7300	5200	---	---	---	---	---
	CA110	1	1725	4		9600	9000	8400	7775	7050	4800	---	---	---	---	---
	CA111	1 1/2	1600	6	*	10700	10250	9700	9080	8375	6000	2500	---	---	---	---
	CA111	2	1725	6		11500	11200	10700	10000	9300	8000	5900	3600	---	---	---
	CA152	2	1350	6	*	11500	11200	10700	10000	9300	8000	5200	---	---	---	
	CA152	3	1600	6	*	13480	12900	12222	11440	10552	8200	6200	4000	---	---	---
30"	CA167	1/3	1140	4		6950	5550	3900	1500	---	---	---	---	---	---	---
	CA132	1/2	1140	6		7500	6150	4400	2200	---	---	---	---	---	---	---
	CA167	1/2	1300	4	*	8900	7925	6660	4270	2300	---	---	---	---	---	---
	CA112	1/2	1725	4		8980	7650	6300	5400	4350	2300	---	---	---	---	---
	CA113	1	1298	6	*	9897	8970	7980	6050	4120	---	---	---	---	---	---
	CA113	3/4	1140	6		10440	9750	8750	7640	6000	---	---	---	---	---	---
	CA115	1	870	6		10640	10450	9800	9000	7900	---	---	---	---	---	---
	CA167	1	1725	4		10900	10150	9400	9000	8300	3600	---	---	---	---	---
	CA115	1 1/2	1035	6	*	11100	10600	9700	8600	7500	3500	---	---	---	---	---
	CA113	1 1/2	1350	6	*	11299	10460	9625	8300	6640	3490	---	---	---	---	---
	CA207	1	1140	6		11300	10530	9450	8250	6480	3200	---	---	---	---	---
	CA132	1 1/2	1725	6		12000	11250	10450	9600	8700	6700	---	---	---	---	---
	CA250	2	1725	6		12000	11250	10450	9600	8700	6000	4100	---	---	---	---
	CA115	2	1176	6	*	12100	11660	11000	10121	9322	6700	---	---	---	---	---
	CA113	2	1575	6	*	12237	11480	10720	9850	8610	5260	2450	---	---	---	---
	CA126	1 1/2	1725	4		12800	11835	10890	9900	8700	6210	2600	---	---	---	---
	CA127	1 1/2	1140	4		13350	12500	11450	10200	8000	---	---	---	---	---	---
	CA115	3	1350	6	*	13480	12982	12498	12042	11465	10380	9470	7500	---	---	---
	CA115	2	1140	6		14000	13750	12900	11850	10450	---	---	---	---	---	---
	CA113	3	1725	6		16000	15350	14700	13850	12900	10200	8000	6000	---	---	---
	CA115	5	1650	6	*	16440	15832	15242	14686	13982	12659	11550	9200	---	---	---
	CA115	7 1/2	1725	6		22000	21500	21100	20600	20000	18400	14200	12008	---	---	---
34"	CA147	1	1140	4		11698	11142	9882	8460	7020	---	---	---	---	---	---
	CA116	1 1/2	1725	4		13350	12100	10000	9100	7300	---	---	---	---	---	---
	CA128	1 1/2	1170	6	*	13695	12400	11100	8365	6000	1015	---	---	---	---	---
	CA190	2	1027	6	*	14657	13652	12590	11500	10000	8000	---	---	---	---	---
	CA188	2	1725	4		14850	13600	12100	10450	8800	4000	---	---	---	---	---
	CA163	2	1140	4		15950	15100	13800	12500	11400	---	---	---	---	---	---
	CA147	3	1725	4		17460	16630	14750	14190	13060	10900	8000	---	---	---	---
	CA190	3	1175	6	*	17580	16750	15896	14600	14095	12000	9500	---	---	---	---
	CA123	3	1140	3		19300	18290	17230	16000	14800	11614	4000	---	---	---	---
	CA190	5	1416	6	*	20500	19800	19000	18325	17500	16000	14200	12250	---	---	---
	CA128	5	1725	6		21000	19850	18900	18200	17500	14850	9300	---	---	---	---
36"	CA134	1	1140	4		13600	12000	11100	9000	7500	2800	---	---	---	---	---
	CA133	1 1/2	1725	4		14350	13100	11600	10090	8301	---	---	---	---	---	---
	CA135	2	950	6	*	16598	15726	15082	14190	13330	8000	---	---	---	---	---
	CA166	2	1725	4		16800	15500	14200	12900	10000	8200	4000	---	---	---	---
	CA198	3	930	6	*	17500	16800	15900	14740	14100	12200	---	---	---	---	---
	CA163	2	870	4		17600	16500	15200	13620	11400	---	---	---	---	---	---
	CA117	2	1140	6		17620	16500	15200	13620	12300	8500	---	---	---	---	---
	CA134	3	1725	4		18500	17700	15700	15100	13900	11500	8550	---	---	---	---
	CA221	3	1100	6	*	19300	18286	17538	16500	15500	10655	6000	---	---	---	---
	CA221	3	1140	6		20500	19500	18500	17100	15850	11600	6500	---	---	---	---
	CA198	5	1100	6	*	20600	19950	19200	18500	17800	16020	14300	---	---	---	---
	CA198	5	1140	6		21200	20500	19500	18484	17325	14111	9500	7300	---	---	---
	CA198	7 1/2	1250	6	*	22500	21900	21200	20750	20050	19008	17000	15200	---	---	---
	CA135	5	1293	6	*	22580	21390	20000	19300	18135	15151	12000	---	---	---	---
	CA117	5	1725	6		23000	22150	21100	20200	19000	18100	16400	14500	6000	---	---
	CA198	7 1/2	1250	6	*	23800	23100	22375	21480	20050	19008	17000	15200	8800	---	---
	CA135	7 1/2	1440	6	*	25500	24800	24100	23300	22400	20400	17150	---	---	---	---
	CA198	10	1500	6	*	27500	26928	26261	25591	24776	23039	21020	18300	13950	---	---

** Designates belt driven models.*

Propellers

							CAPACITY C.F.M.									
Blade Dia.	Prop	HP	RPM	# Blades	Type	Free Air	1/8" SP	1/4" SP	3/8" SP	1/2" SP	3/4" SP	1" SP	1-1/4" SP	1-1/2" SP	1-3/4" SP	2" SP
42"	CA165	1 1/2	1000	4	*	15690	15090	13386	12220	17019	6638	---	---	---	---	---
	CA165	1	870	4		15800	15200	13480	12310	5800	900	---	---	---	---	---
	CA165	2	1140	4		17964	17277	15326	13990	12351	7600	---	---	---	---	---
	CA119	1 1/2	750	4	*	18960	17000	14662	11700	7200	---	---	---	---	---	---
	CA119	2	820	4	*	20700	18900	17002	14700	11400	4000	---	---	---	---	---
	CA119	2	870	4		22040	21000	20500	18500	15000	6000	---	---	---	---	---
	CA165	3	1450	4	*	22740	21870	19400	17710	15635	9620	3125	---	---	---	---
	CA119	3	890	4	*	23700	22100	20200	18960	16970	9950	3600	---	---	---	---
	CA239	3	1140	4		24500	23150	23000	22000	19650	14000	10000	---	---	---	---
	CA119	5	1090	4	*	26460	25185	24000	23220	22050	18125	12840	---	---	---	---
	CA199	5	850	6	*	26900	25600	24403	23450	22250	18400	13900	---	---	---	---
	CA119	5	1140	4		28970	27960	26840	25700	24200	19500	13800	2000	---	---	---
	CA199	7 1/2	960	6	*	30800	29600	28500	27400	26200	23500	20500	16500	---	---	---
	CA272	7 1/2	1140	4		31400	30280	29130	28030	26815	24220	21050	17230	10200	---	---
	CA199	10	1075	6	*	33300	32500	31500	30300	29500	27400	25100	22000	18000	---	---
48"	CA137	2	870	4		19162	17755	16348	---	---	---	---	---	---	---	---
	CA137	3	1140	4		28600	26500	24400	22000	20000	15900	11000	---	---	---	---
	CA139	3	870	4		28700	26500	24200	21600	18500	10000	---	---	---	---	---
	CA215	5	816	6	*	30300	29000	27300	24000	22000	17500	15200	8060	---	---	---
	CA185	5	1140	4		32000	30493	28900	27173	25432	21054	14985	7100	---	---	---
	CA195	5	800	6	*	33000	31000	29400	27500	25670	20700	---	---	---	---	---
	CA138	5	870	4		33000	31500	29750	27650	25300	18000	---	---	---	---	---
	CA215	7 1/2	932	6	*	34400	33280	32000	30500	29000	27500	24800	20000	---	---	---
	CA139	7 1/2	1140	4		37000	35000	32800	30600	28000	23000	17700	---	---	---	---
	CA195	7 1/2	900	6	*	37500	35900	34500	32800	31200	27700	23000	---	---	---	---
	CA215	10	1028	6	*	38000	37275	36650	35000	34000	30500	29400	26100	22000	---	---
	CA138	10	1140	4		41000	39200	38300	37000	35400	32400	29000	24000	13060	---	---
	CA195	10	1000	6	*	41200	39700	38300	36900	35400	32400	29000	24000	---	---	---
	CA215	15	1140	6		42900	42120	40500	39000	37500	35000	33200	29900	24860	---	---
60"	CA186	3	1140	2		40000	36300	31300	25300	17000	9000	---	---	---	---	---
	CA142	5	1140	4		45000	41000	37000	33500	28500	16000	2500	---	---	---	---
	CA169	5	870	2		45200	41500	37000	33000	26000	14000	---	---	---	---	---
	CA143	5	690	4	*	45000	40800	36000	32150	26000	---	---	---	---	---	---
	CA227	7 1/2	690	6	*	51000	49500	47250	43500	39375	30750	21375	16875	12000	---	---
	CA228	7 1/2	870	6		47000	45500	43600	41000	38700	33000	24000	---	---	---	---
	CA227	10	783	6	*	54000	51900	49000	46300	43200	36000	27000	---	---	---	
	CA143	10	870	4		57200	54400	51000	48500	45000	38000	29500	---	---	---	---
	CA227	15	870	6		61000	59500	57000	55000	49000	46000	40000	32000	---	---	---
	CA227	20	970	6	*	66750	65250	63750	61875	60375	55500	50625	45000	38250	33375	29625

** Designates belt driven models.*

GENERAL VENTILATION GUIDE

Space to be Ventilated	# of air changes/hr	# of min. per air change	Space to be Ventilated	# of air changes/hr	# of min. per air change
Auditorium	12	5	Laboratories	12	5
Bakeries	20	3	Laundries	20	3
Banquet Halls	20	3	Lodge Rooms	12	5
Boiler Rooms	60	1	Machine Shop	10	6
Bowling Alleys	12	5	Mills	12	5
Cafeterias	12	5	Offices	12	5
Classrooms	10	6	Packing Houses	20	3
Cleaning & Drying	12	5	Plating Rooms	20	3
Club Room	12	5	Printing Plants	15	4
Churches	12	5	Projection Booths	60	1
Creameries	10	6	Recreation Rooms	12	5
Dance Halls	12	5	Residences	15	4
Dining Rooms	12	5	Restrooms	12	5
Dormitories	10	6	Sales Rooms	10	6
Engine Rooms	30	2	Ship Holds	6	10
Factories	10	6	Stores	12	5
Foundries	12	5	Toilets	20	3
Garages	10	6	Transfer Rooms	20	3
Kitchens	30	2	Tunnels	6	10

Formulae for Determining Fan Capacity:

$$\text{CFM Required} = \frac{\text{Volume of Space (WxHxL)}}{\text{\# of minutes per air change}} \quad \textbf{OR} \quad \frac{\text{[Volume of Space (WxHxL)] [\# of air changes/hr.]}}{\text{60 minutes/hour}}$$

Limited Warranty:

Americraft Manufacturing Company, Inc. ("Americraft") warrants the products and parts it manufacturers ("Americraft Products and Parts") against defects in material and workmanship under normal use and conditions for the lesser of eighteen (18) months from the date of shipment or twelve (12) months from the date of installation (the "Warranty Period"). This warranty does not apply to repairs or replacement necessitated by any cause beyond the control of Americraft including, but not limited to any malfunction, defects or failures which, in the opinion of Americraft, are caused by or resulting from: faulty installation, unauthorized service or parts, Buyer's faulty or negligent assembly of components, the negligence of Buyer or its employees or agents, any alteration or modification of Americraft Products or Parts, over-loading, incorrect electrical connections, use under abnormal operating conditions, misapplication of Americraft Products or Parts, improper maintenance, operation contrary to furnished instructions, shipping or transit accidents, modification or repair by Buyer, abuse, misuse, neglect, accident, fire, flood, or other acts of God, incorrect line voltage, or normal wear and tear. Expenses incurred by Buyer in repairing or replacing any defective Americraft Products or Parts will not be paid by Americraft unless authorized in advanced in writing signed by an authorized officer of Americraft.

In the event a defect in material or workmanship relating to Americraft Products or Parts is found during the warranty period, buyer shall immediately notify Americraft and request a written return authorization for the allegedly defective material. Return of such material shall be at the buyers' sole cost and expense (all shipping and transportation expenses to be paid by the buyer). Americraft assumes no responsibility for any material returned to its plant without written authorization of an officer of Americraft.

The Warranty contained herein is in lieu of all other warranties, express or implied, including, but not limited to, the implied warranties of merchantability and fitness for a particular purpose. Buyer agrees that Americraft liability and Buyer's sole and exclusive remedy pursuant to any claim of any kind, including but not limited to a claim in contact, tort, negligence or strict liability shall be, at Americraft's option, the repair, replacement of, or award of a credit from Americraft to Buyer in the amount of the original purchase price for any Americraft Product or Part which is determined by Americraft to be defective. Under no circumstances shall Americraft or any of its affiliates have any liability whatsoever for any compensatory, punitive, special, indirect, incidental or consequential damages, including, without limitation, lost profits or revenues, loss of use, lost production or claims of third parties against Buyer, even if Americraft has been advised of the possibility of such damages.

Concerning products or parts furnished by, but not manufactured by Americraft, such as motors, Americraft expressly limits its liability to any warranties extended by the manufacturer of such product or part, which Americraft will pass through to Buyer.

Return Policy:

All requests for returns of Americraft products are handled on an individual basis. All Americraft products are manufactured "made to order". Therefore, Americraft's Customer Service Manager must review each request for material return and determine if it is appropriate to issue a Return Merchandise Authorization (RMA).

To issue a RMA, it will be necessary for Customer Service Manager to know the model and serial number of the item to be returned and the purchase order number of the order placed. When issuing the RMA, the Customer Service Manager will estimate the amount of credit that may be expected. The estimate is subject to adjustment, after receipt and inspection of the returned merchandise.

Returned merchandise should be properly packaged to prevent damage in transit. The RMA number should be clearly marked on the container, and the packing slip should reference the RMA number. All returned merchandise should be returned "freight prepaid". Any merchandise returned without a RMA, or returned "freight collect", is refused at our dock with instructions to return to the shipper. If items returned are covered and returned under warranty, incoming freight charges will be reimbursed when justified.

DISTRIBUTED BY

www.americraftmfg.com

7937 School Road • Cincinnati, OH 45249 • 1.800.848.2938