AUTHORIZED FEDERAL SUPPLY SERVICE INFORMATION TECHNOLOGY SCHEDULE PRICE LIST

GENERAL PURPOSE COMMERCIAL INFORMATION TECHNOLOGY EQUIPMENT, SOFTWARE AND SERVICES

Special Item No. 132-3 Leasing of Product

Special Item No. 132-33 Perpetual Software Licenses

Special Item No. 132-51 Information Technology Professional Services

Special Item No. 132-52 Electronic Commerce Services

SIN 132-3 – LEASING OF PRODUCTS

Note: The ordering activity is responsible for the obligation of funds consistent with applicable law. Agencies are advised to review the lease terms and conditions contained in this price list prior to ordering and obligating funding for a lease.

SIN 132-51 - INFORMATION TECHNOLOGY (IT) PROFESSIONAL SERVICES

FPDS Code D301	IT Facility Operation and Maintenance
FPDS Code D302	IT Systems Development Services
FPDS Code D306	IT Systems Analysis Services
FPDS Code D307	Automated Information Systems Design and Integration Services
FPDS Code D308	Programming Services
FPDS Code D310	IT Backup and Security Services
FPDS Code D311	IT Data Conversion Services
FPDS Code D313	Computer Aided Design/Computer Aided Manufacturing (CAD/CAM) Services
FPDS Code D316	IT Network Management Services
FPDS Code D399	Other Information Technology Services, Not Elsewhere Classified

Note 1: All non-professional labor categories must be incidental to and used solely to support hardware, software and/or professional services, and cannot be purchased separately.

Note 2: Offerors and Agencies are advised that the Group 70 - Information Technology Schedule is not to be used as a means to procure services which properly fall under the Brooks Act. These services include, but are not limited to, architectural, engineering, mapping, cartographic production, remote sensing, geographic information systems, and related services. FAR 36.6 distinguishes between mapping services of an A/E nature and mapping services which are not connected nor incidental to the traditionally accepted A/E Services.

Note 3: This solicitation is not intended to solicit for the reselling of IT Professional Services, except for the provision of implementation, maintenance, integration, or training services in direct support of a product. Under such circumstances the services must be performance by the publisher or

manufacturer or one of their authorized agents.

SIN 132-52 - ELECTRONIC COMMERCE (EC) SERVICES

FPDS Code D304 Internet Access Services
FPDS Code D399 Other Data Transmission Services, Not Elsewhere Classified - Except "Voice" and Pager Services

NOTE: Electronic Commerce Services are not intended to supersede or be substitute for any voice requirements of FTS2001.

Contact Information:

AT&T GOVERNMENT SOLUTIONS
1900 Gallows Road
Vienna, VA 22182

703-245-3673Carol Brown
http://www.att.com/gov

Contract Number: GS-35F-0249J

Period Covered by Contract: February 22, 1999 through February 21, 2009

General Services Administration
Federal Supply Service

Price List current through Modification #34, dated July 25, 2008.

Products and ordering information in this Authorized FSS Information Technology Schedule Pricelist are also available on the GSA Advantage! System. Agencies can browse GSA Advantage! by accessing the Federal Supply Service's Home Page via the Internet at http://www.fss.gsa.gov/

Limited Rights Legend

Solicitation: GS-35F-0249J

Contractor: AT&T Corp.

AT&T - Proprietary

This proposal includes data that shall not be disclosed outside the Government and shall not be duplicated, used, or disclosed — in whole or in part — for any purpose other than to evaluate this proposal. If, however, a contract is awarded to this offeror as a result of — or in connection with — the submission of this data, the Government shall have the right to duplicate, use, or disclose the data to the extent provided in the resulting contract. This restriction does not limit the Government's right to use information contained in this data if it is obtained from another source without restriction. The data subject to this restriction are contained in all pages of this proposal.

Use or disclosure of the data on this page is subject to the restrictions on the title page of this proposal.

This document contains confidential, trade secret, commercial or financial information owned by an AT&T Company and is submitted for evaluation purposes only. It is exempt from disclosure under the Freedom of Information Act (5 U.S.C. 552) under Exemption (b) (4), and its disclosure is prohibited under the Trade Secrets Act (18 U.S.C. 1905).

Trademark Acknowledgments

Every effort has been made to identify trademark information in the accompanying text. However, this information may unintentionally have been omitted in referencing particular products. Product names that are not so noted may also be trademarks of their respective manufacturers.

Fastar is a registered trademark of AT&T. *SafeNet/Security Center* is a registered trademark of SafeNet. *SafeNet/Speed Gateway Encryptor* is a registered trademark of SafeNet. *PacketStar* is a registered trademark of Lucent Technologies Inc. *OptiStar* is a registered trademark of Lucent Technologies Inc. *Windows NT is* a registered trademark of Microsoft.

Table of Contents

Section..... Page

Information for Ordering Offices 2
Geographic Scope of Contract 2
Contractor's Ordering Address and Payment Information 2
Liability for Injury or Damage 6
Statistical Data for Government Ordering OfficeCompletion of Standard Form 279 6
FOB Destination 7
Commercial Delivery Schedule (Multiple Award Schedules) 7
Discounts 7
Trade Agreements Act of 1979, as Amended 8
Statement Concerning Availability of Export Packing 8
Small Requirements 8
Maximum Order 8
Use of Federal Supply Service Information Technology Schedule Contracts In Accordance With (IAW) FAR 8.404 8
Federal Information Technology/Telecommunication Standards Requirements 11
Federal Information Processing Standards Publications (FIPS PUBS) 11
Federal Telecommunication Standards (FED-STDS) 11
Security Requirements 11
Contract Administration for Ordering Offices 12
GSA Advantage! 12
Purchase of OPEN MARKET ITEMS 12
Contractor Commitments, Warranties and Representations 12
Overseas Activities 13
Blanket Purchase Agreements (BPAs) 13
Contractor Team Arrangements 14
Installation, De-installation, Reinstallation 14
Section 508 Compliance 14
Prime Contractor Ordering From Federal Supply Schedules 15
Terms And Conditions Applicable 16
to Information Technology 16
TERMS AND CONDITIONS APPLICABLE TO LEASING OF GENERAL PURPOSE COMMERCIAL INFORMATION TECHNOLOGY PRODUCTS (SPECIAL ITEM NUMBER 132-3) 17
Term Software Licenses (Special Item Number 132-32) Perpetual Software Licenses (Special Item Number 132-33) Maintenance (Special Item Number 132-34) of General Purpose Commercial Information Technology Software 24
1. Technical Services 24
2. Inspection of Software 24
3. Software Maintenance 24
4. Periods of Term Licenses (132-32) and Maintenance (132-34) 25
5. Conversion from Term License to Perpetual License (Not Applicable to AT&T AGMEMS Software.) 26
6. Term License Cessation (Not Applicable to AT&T AGMEMS Software.) 26
7. Utilization Limitations - (132-32, 132-33, and 132-34) 27
8. Software Conversions - (132-32 AND 132-33) 28
9. DESCRIPTIONS AND EQUIPMENT COMPATIBILITY 28
10. Right-to-Copy Pricing 28
Terms And Conditions Applicable to Information Technology (IT) Professional Services (Special Item Number 132-51) Electronic Commerce (EC) Services (Special Item Number 132-52) 29
1. Scope 29
2. Performance Incentives 29
3. Ordering Procedures For Services (Requiring a Statement of Work) 29
4. Order 32
5. Performance of Services 32

6. Inspection of Services 33
7. Responsibilities of the Contractor 33
8. Responsibilities of the Government....33
9. Independent Contractor 33
10. Organizational Conflicts of Interest 33
11. Invoices 34
12. Payments....34
13. Résumés 34
14. Incidental Support Costs 34
15. Approval Of Subcontracts 34
AT&T Managed Internet Service 35
Service Description 35
1 AT&T Internet Service 36
1.1 AT&T Managed Internet Services (MIS) 36
1.1.1 Service Description 36
Overview 36
1.1.2 Features of AT&T MIS Include....36
1.1.3 Service Offers 36
1.1.3 Service Features 39
1.1.3.1 Service Options 40
1.1.4 Benefits of AT&T Managed Internet Service....41
1.2 AT&T Managed Internet Service: Service and Maintenance 42
1.2.1 Customer Access 42
1.2.2 Implementation Support 42
1.2.3 Network Operations Services 43
1.2.4 Technical Services and Support 43
1.2.5 The AT&T IP Backbone 44
1.2.6 AT&T Internet Service Level Guarantee 45
1.2.7 AT&T IP Network Performance Web Site 46
1.3 AT&T Internet Services Managed Internet Service CPE Specifications & Policy 46
1.3.1 Introduction 46
1.3.2 Basic (Dedicated) Service 46
1.3.2.1 Router Specifications for MIS Basic (Dedicated) Service 46
1.3.2.2 Router Configurations for MIS Basic (Dedicated) Service 47
1.3.3 CSU/DSU Specifications for MIS Basic (Dedicated)Service....47
1.3.3.1 CSU/DSU Configurations for Basic (Dedicated) Service 47
1.3.4 Access Protocols 48
2 AT&T Dedicated Hosting Services - Managed Service 49
2.1 Service Description....49
2.2 Hardware....50
2.3 Software 52
2.4 Options/Features 53
2.4.1 Bandwidth 53
2.4.2 Management Services 53
2.4.3 Backup/Restore....54
2.4.4 Monitoring Services 54
2.4.5 Remote Hands 55
2.4.6 Load Balancing 57
2.4.7 Back End Connectivity 57
2.5 Internet Data Centers 57
2.6 Global IP Network....58
2.6.1 Internet Data Center and Network Facilities 58
2.7 Internet Data Center Network Infrastructure 58
2.7.1 AT&T Global IP Network Infrastructure....60
2.7.2 Backbone Topology Map 61
2.7.3 Peering Relationships 62
2.7.4 International Presence 63

2.8 Network Reliability Monitoring and Reporting 63
2.8.1 Network Reliability 63
2.8.2 Delay Excursion 64
2.8.3 Connection Availability 65
2.8.4 Routing Reliability 65
2.9 Operations 66
2.9.1 Server Management 66
2.9.2 Content Management, Uploads and Updates 66
2.10 DNS and IP Allocation Policies 66
2.10.1 Domain Name Services (DNS) 66
2.10.2 AT&T IP Address Policy 66
2.11 Shipping, Receiving and Inventory Control 67
2.12 Problem Resolution 67
2.12.1 Scheduled Maintenance and Notification Procedure 67
2.12.2 Trouble Reporting 67
2.12.3 Escalation Procedures 68
2.13 Customer Service/Support 69
2.13.1 Customer Service Contacts 69
2.14 Customer Reports and Traffic Analysis Reports 69
2.15 Security 72
2.15.1 Facility Security 72
2.15.2 Server Security 72
2.15.3 Additional Security features 72
2.15.3.1 Managed Security Services 72
2.16 Acceptable Use Policy 73
2.16.1 Policy Introduction 73
2.16.2 Prohibited Uses 74
2.16.3 Illegal/Criminal Activity 74
2.16.4 Security Violations 74
2.16.5 Threats 74
2.16.6 Offensive Materials 74
2.16.7 Spam 74
2.16.8 Indirect Access 75
2.16.9 Consequences 75
2.16.10 Incident Reporting 75
2.16.11 Contact Information 76
2.16.12 Revisions to this Policy 76
3 AT&T Business Internet Service Overview 78
3.1 Features 78
3.2 The AT&T Dialer 79
3.3 International Access 79
3.4 Help Desk 80
3.5 Fenced Internet Option 80
3.6 Authentication 80
3.7 Customer Benefits 81
3.8 Pricing Plans 81
3.8.1 Base Plan 81
3.8.2 Intermediate Plan 81
3.8.3 Enterprise Plan 82
3.8.4 Account Cap Plan 82
3.8.5 Credit Card Plans 82
3.9 Billing 82
3.10 Summary 82
4 AT&T Digital Subscriber Line Internet Service 84
4.1 Service Description 84
4.2 Benefits 87
4.3 Service Level Agreement - Service Availability Guarantee 88

4.4 How DSL Works 88
4.5 Ordering & Customer Care Support 88
5 SafeNet VPN Product Overview 90
5.1 The SafeNet Product Line Includes these Components 90
5.1.1 SafeNet/Security Center™ (S/SC) 90
5.1.2 SafeNet/Speed™ Gateway Encryptor 91
5.1.3 SafeNet Soft Remote 92
5.1.4 SafeNet/Smart™ Client 92
5.1.5 Standards Compliance 93
5.2 SafeNet Managed VPN Service Overview 93
5.2 SafeNet Managed VPN Service Overview 94
5.2.1 SafeNet On-site Support or Installation 95
5.2.2 SafeNet/Maintenance Plus (for product customers without managed service) 95
5.3 SafeNet Company Overview 95
5.4 The AT&T/SafeNet Team Help Desk and Customer Support 95
6 AT&T Managed Security Services - Token Authentication Service 98
6.1 General Overview 98
6.2 Service Description 98
6.2.1 Service Components 100
6.3 TA User 101
6.3.1 UserID/PIN 101
6.3.2 Token code generator 101
6.3.3 3rd Party Client Software 101
6.4 TA Service Infrastructure 101
6.4.1 TA Servers 102
6.4.2 Customer Web Server 102
6.4.3 TA Service Firewall 102
6.5 TA Enabled Application 102
6.6 TA Service Management 102
6.6.1 TA Service Bundles 102
7 SIN 132-51 Labor Category Descriptions 103
0001: Systems Analyst/Programmer 103
0002: Senior Systems Analyst/Programmer 103
0003: Principal Engineer/Analyst 104
0004: Associate Manufacturing Systems Engineer 104
0005: Senior Manufacturing Systems Engineer 105
0006: Principal Manufacturing Systems Engineer 105
0007: Information Security Analyst 106
0008: Senior Information Security Specialist 106
0009: Principal Information Security Specialist 107
0010: Senior Engineer/Scientist/Analyst 108
0011: Principal Staff Scientist/Engineer/Analyst 108
0012: Senior Corporate Consultant 108
0013: Telecommunications Technician 109
0014: Network Engineer 109
0015: Network Architect 109
0016: Network Consultant 110
0017: Technology Updates Applications Support Technician 110
0018: Technology Updates Applications Systems Analyst 110
0019: Supplemental PKI Services Applications Support Technician 110
0020: Supplemental PKI Services Applications Systems Analyst 110
0021: PKI Professional Consultant 111
0022: Forms Designer 111
0023: E-Commerce Forms Consultant 111
0024: Forms System Security Architect 111
0025: Forms Project Manager 112
0026: Forms Management Consultant 112

0027: Task Order Project Manager....112
0028: Technical Project Lead....113
0029: Technology Advisor....113
0030: Information Systems Analyst....113
0031: Technology Research Specialist....114
0032: Systems Security Engineer....114
0033 Customer Service Representative....114
0034: Video Teleconferencing Communications Technician....115
0035: Network Operations Manager....115
0036: Network Operations Supervisor....115
0037: Task Order Project Supervisor....115
0038: Associate Systems Analyst/Programmer....116
0039: Documentation/Administration Support Specialist....116
0040: Junior Technical Writer....116
0041: Training Support Specialist....117
0042: Junior System Analyst....117
0043: Staff Logistician/Mid-level....118
0044: Senior Logistician....118
8 Managed (R)egistered e-Mail....121
8.1 Service Description....121
9 AT&T Government Markets Enterprise Management System Service (AGMEMS)....123
9.1 AT&T Government Markets Enterprise Management System Service (AGMEMS) Introduction 123
9.2 AT&T Government Markets Enterprise Management System Service (AGMEMS) Product Overview....123
9.3 AT&T Government Markets Enterprise Management System Service (AGMEMS) Value- Added and Key Differentiators....125
9.4 AT&T Government Markets Enterprise Management System Service (AGMEMS) Product Support 128
9.5 AT&T Government Markets Enterprise Management System Service (AGMEMS) Summary....129
10 AT&T Government Solutions Single-Site Local Area Network (LAN) Internet Protocol (IP) Telephony Service....131
10.1 Service Overview....131
10.1.1 Benefits of the Service....131
10.1.2 Customer Pre-requisites....131
10.1.3 Availability....131
10.2 SLAs/Warranties....131
10.3 Service Description....132
10.5 Professional Services....136
10.6 AT&T Government Solutions Enhanced Single-Site Local Area Network Internet Protocol (IP) Telephony Service....137
10.6.1 Service Overview....137
10.6.2. Benefits of the Service....137
10.6.3 Customer Pre-requisites....137
10.6.4 Availability....138
10.6.5 SLAs/Warranties....138
10.6.7 Service Description....138
10.6.7.1. Design....138
10.6.7.2 Equipment Provided as Part of the Service....138
10.6.7.3 Deployment Plan and Services....138
10.6.7.4 Administrator and End User Training....139
10.6.7.5 Maintenance....139
10.6.8 Detailed Feature List for Supported Equipment....140
10.6.9 Service Size Options....141
10.6.10 Professional Services....142
10.6.11 Service Pricing....142
11 AT&T Custom Managed Virtual Private Network Service (CM-VPNS)....144

11.1 CM-VPNS Service Description 144
11.1.1 Overview 144
11.1.2 Service Architecture 144
11.1.3 Features and Capabilities 147
11.1.3.1 Fixed Site Access 147
11.1.3.2 Remote User Access 149
11.1.3.3 Remote User Access Tunnel Details 149
11.1.4 Availability, Diversity and Redundancy 151
11.1.4.1 Fixed Site Diversity 151
11.1.4.2 Remote Users Diversity 151
11.1.4.3 Data Center Diversity 151
11.1.5 Managed Intrusion Detection System 151
11.1.6 Management Architecture 152
11.2 Service Management 153
11.2.1 CM-VPNS Management Solution 153
11.2.2 Management Components 154
11.2.3 Customer Care 154
11.2.4 Account Administration 155
11.2.4.1 Ordering 155
11.2.4.2 Moves, Adds, Changes and Disconnects (MACD) 155
Agency Agreement 157
1. Effective Date 157
2. Services 157
3. Payment of Charges 157
4. Limitation of Liability 157
5. Coverage 157
1 AT&T Managed Internet Service (MIS) GSA Price List Notes 166
1.1 AT&T MIS Service Offer 166
1.1.1 Managed Internet Service Monthly Service Charge 166
1.1.2 Managed Internet Service with Managed Router Monthly Service Charge 166
1.1.3 Options Charges - Managed Firewall Service ServerBased 166
1.2 Access Facilities Charges 167
1.3 Service Period 167
2 AT&T Dedicated Hosting Services – Managed Service GSA Price List 168
2.1 AT&T Dedicated Services - Managed Service Offer 168
2.2 Connectivity 169
2.3 Service Period 169
AT&T Business Internet Service - Corporate Dial Price Plan 170
AT&T Digital Subscriber Line Price Plan 173
SafeNet Virtual Private Network Price Plan 174
SafeNet Shipping Charges 178
SafeNet Purchased and Maintenance Agreement 179
Managed Token Service Subscription Service 180
AT&T Site Labor Category 182
Government Site GSA Labor Category 188
RPOST 195
AGMEMS Software Pricing 200
Internet Protocol Telephony Pricing 201
GSA SCHEDULE PRICING - CM-VPNS 202
General Terms and Conditions 205
1 Definitions 205
2 Charges and Billing 205
3 Responsibilities of the Parties 206
4 Use of Information 206
5 Publicity and Marks 207
6 Software 207
7 Dispute Resolution 208

8 Force Majeure 209
9 Limitations of Liability 209
10 Termination 210
11 General Provisions 211
AT&T Additional Terms and Conditions – Managed Internet Service 214
1. DEFINITIONS 214
2. PRICING, RENEWALS, ORDERS AND BILLING 214
3. TERMINATION AND INITIAL SATISFACTION 215
4. RESPONSIBILITIES OF THE PARTIES 216
5. EQUIPMENT AND SOFTWARE 217
6. DOMAIN NAME SYSTEM SERVICES 218
Additional Terms and Conditions for Government 220
1 Definitions 220
2 Pricing, Renewals, Orders and Billing 221
3 Termination 222
4 Responsibilities of the Parties 223
5 Customer Managed Collocation Service 224
6 Facilities, Equipment And Software 225
7 Indemnification 226
8 Domain Name System Services 226
9 Disclosure of Service 227
10 Remote Hands Service 227
11 General 227
Additional Terms and Conditions for Government 229
1 The Services 229
2 Support Services 230
3 Pricing and Billing 230
4 Changes and Termination 231
5 Responsibilities of the Parties 231
6 AT&T Customer Premise Equipment ("AT&T CPE" 233
7 Licensing of Materials 234
8 Additional Disclaimers and Limitation of Liability 234
9 Traveling User Support 235
10 Help Desk Support 235
11 General 236
Additional Terms and Conditions - DSL 238
1 Definitions 238
2 Pricing, Renewals, Orders and Billing 238
3 Termination 239
4 Responsibilities of the Parties 240
5 Additional DSL Only Terms 242
6 Equipment and Software 242
7 Domain Name System Services 243
Additional Terms and Conditions for Government 246
1 Definitions 246
2 Pricing, Renewals, Orders And Billing 247
3. Termination And Initial Satisfaction Guarantee 248
4 Responsibilities of the Parties 249
5 Third Party Internet Access & Egress 250
6 Supplemental Service Terms 252
7 Equipment and Software 252
8 Domain Name System Services 253
The following terms and conditions apply to dial connectivity used in conjunction with AVTS 254
1 The Service 254
2 Support Services 255
3 Pricing and Billing 255
4 Termination 256

5 Responsibilities of the Parties 256
6 AT&T Customer Premise Equipment ("AT&T CPE") 258
7 Licensing of Materials 259
8 Additional Disclaimers and Limitation of Liability 259
9 Traveling User Support 259
10 Help Desk Support 260
11 General 260
RPost Government General Terms and Conditions 262
1 Definitions 262
2 Services 263
3 Taxes 263
4 Proprietary Rights 263
5 Confidential Information 264
6 Privacy 265
7 No Warranties 265
8 Indemnification 266
9 Limitation of Liability; Limitation of Remedy 266
10 Term and Termination 267
11 General 267
12 Special Provisions 268
Terms and Conditions - AT&T AGMEMS Software 271
1 Rights to Software 271
2 License Terms and Conditions 271
Single-Site LAN IPT Additional Terms and Conditions 273
1 License 273
2 General Limitations 274
3 Upgrades and Additional Copies 274
4 Proprietary Notices 275
5 Protection of Information 275
6 Term and Termination 275
7 Customer Records 275
8 Export 276
9 Restricted Rights 276
10 Limited Warranty 276
11 Restrictions 276
12 General Terms Applicable to the Limited Warranty Statement and Software License 277
12.1 Disclaimer of Liabilities 277

Information for Ordering Offices Applicable to all Special Item Numbers

Information for Ordering Offices

Special Notice to Agencies
Small Business Participation

SBA strongly supports the participation of small business concerns in the Federal Supply Schedules Program. To enhance Small Business Participation SBA policy allows agencies to include in their procurement base and goals, the dollar value of orders expected to be placed against the Federal Supply Schedules, and to report accomplishments against these goals.

For orders exceeding the micro-purchase threshold, FAR 8.404 requires agencies to consider the catalogs/pricelists of at least three schedule contractors or consider reasonably available information by using the GSA Advantage!™ on-line shopping service (www.fss.gsa.gov). The catalogs/pricelists, GSA Advantage!™ and the Federal Supply Service Home Page (www.fss.gsa.gov) contains information on a broad array of products and services offered by small business concerns.

This information should be used as a tool to assist ordering activities in meeting or exceeding established small business goals. It should also be used as a tool to assist in including small, small disadvantaged, and women-owned small businesses among those considered when selecting pricelists for a best value determination.

For orders exceeding the micro-purchase threshold, customers are to give preference to small business concerns when two or more items at the same delivered price will satisfy their requirement.

Geographic Scope of Contract

The geographic scope of this contract for network services is the 48 contiguous states and the District of Columbia. For Dedicated Hosting Services- Managed Service, International hosting options are available. Orders for Dedicated Hosting Services - Managed Service must be placed domestically in the 48 contiguous states and the District of Columbia. Professional Services offered under SIN 132-51 are available worldwide.

Contractor's Ordering Address and Payment Information

This support is provided at no additional charge to the Government.

Below are the telephone number(s) that can be used by ordering agencies to obtain technical and/or ordering assistance.

Ordering, Contact and Payment Information:

SIN 132-3 (LEASING)

Ordering Address:
AT&T Corp., Inc
1900 Gallows Road
Vienna, VA 22182
Attention: Carol Brown

Contact Information:
Carol Brown (703) 245-3673
carolbwear@att.com

Payment Information:
AT&T
P.O. Box 1629
Vienna, VA 22183
GSA Billing Inquiries: (703) 713-5650

SIN 132-32, 132-33, and 132-34 (AGMEMS)

Ordering Address:
AT&T Corp., Inc
1900 Gallows Road
Vienna, VA 22182
Attention: Carol Brown

Contact Information:
Carol Brown (703) 245-3673
carolbwear@att.com

Payment Information:
AT&T
P.O. Box 1629
Vienna, VA 22183
GSA Billing Inquiries: (703) 713-5650

SIN 132-51

Ordering Address:
AT&T Corp., Inc
1900 Gallows Road
Vienna, VA 22182 Attention: Carol Brown

Contact Information:
Carol Brown (703) 245-3673
carolbwear@att.com

Payment Information:

AT&T
P.O. Box 2499
Vienna, VA 22183
GSA Billing Inquiries: (703) 713-5120

SIN 132-52

Ordering Address:	**MIS Ordering and Technical Support:**
AT&T Corp	Carol Brown (703) 245-3673
Government Markets	carolbwear@att.com
1900 Gallows Road Vienna, VA 22182	
Attention: Carol Brown	

Dedicated Hosting Services - Managed Service Ordering Support:

Call your local AT&T Sales Representative or the AT&T Dedicated Hosting Services - Managed Service Rapid Response Center at 1-800-243-5288.

Dedicated Hosting Services- Managed Service Technical Support:

1-888-ATT-7544

Payment Address:
AT&T Corp PO Box 277019 Atlanta, GA 30384-7019 1-866-386-9320

Payment Address Dedicated Hosting Services-Managed Service:
AT&T Corp
PO Box 514970
Los Angeles, CA 90051-4970
1-866-386-9320

Business Internet Service

Ordering Address:
AT&T Corp., Inc.
1900 Gallows Road
Vienna, VA 22182
Attention: Carol Brown

Contact Information:
Carol Brown (703) 245-3673
carolbwear@att.com

Payment Address:

AT&T
7872 Collection Center Drive
Chicago, IL 60693 Tel: 1-866-386-9320

SafeNet Virtual Private Network Service

Ordering Address:
AT&T Corp., Inc.
carolbwear@att.com
1900 Gallows Road
Vienna, VA 22182
Attention: Carol Brown

Contact Information:
Carol Brown (703) 245-3673

Payment Address:

AT&T
P.O. Box 2499
Vienna, VA 22183
GSA Billing Inquiries: (703) 713-5120

Token Authentication

Ordering Address:
AT&T Corp., Inc.
1900 Gallows Road
Vienna, VA 22182
Attention: Carol Brown

Contact Information:
Carol Brown (703) 245-3673
carolbwear@att.com

Payment Address:

AT&T
P.O. Box 2499
Vienna, VA 22183
GSA Billing Inquiries: (703) 713-5120

Government Commercial Credit Cards will be acceptable for payments equal to or less than the micro-purchase threshold ($2,500).

Liability for Injury or Damage

The Contractor shall not be liable for any injury to Government personnel or damage to Government property arising from the use of equipment maintained by the Contractor, unless such injury or damage is due to the fault or negligence of the Contractor.

Statistical Data for Government Ordering OfficeCompletion of Standard Form 279

Block 9: G. Order/Modification under Federal Schedule

Block 16: Contractor Establishment Code (DUNS): 62-159-9893

Block 30: Type of Contractor - C. Large Business

Block 31: Woman-Owned Small Business - No

Block 34: RESERVED

Block 36: Contractor's Taxpayer Identification Number (TIN) 13-4924710

4a CAGE Code

OLUL1

4b Contractor has registered with the Central Contractor Registration Database

FOB Destination

Commercial Delivery Schedule (Multiple Award Schedules)

(a) TIME OF DELIVERY

The contractor shall deliver to destination within the number of calendar days after receipt of order (ARO), as set forth below. Offerors shall insert in the "time of Delivery (days ARO)" column in the Schedule of Items a definite number of calendar days within which delivery will be made. In no case shall the offered delivery time exceed the contractor's normal commercial practice.

Special Item Number	Delivery Time (Days)*
132-3	As negotiated
132-51	30 days
132-52	45 days*

*AT&T will have Managed Internet Services, Digital Subscriber Line (DSL) Services, Business Internet Services, SafeNet Virtual Private Network (VPN) Services and Dedicated Hosting Services-Managed Service available 45 days after AT&T purchase and sales order approval, or as negotiated between the Ordering Office and the Contractor.

(b) URGENT REQUIREMENTS

When the Federal Supply Schedule contract delivery period does not meet the bona fide urgent delivery requirements of an ordering agency, agencies are encouraged, if time permits, to contact the contractor for the purpose of obtaining accelerated delivery. The contractor shall reply to the inquiry within 3 workdays after receipt. The contractor in writing shall confirm telephonic replies. If the contractor offers an accelerated delivery time acceptable to the ordering agency, any order(s) placed pursuant to the agreed upon accelerated delivery time frame shall be delivered within this shorter delivery time and in accordance with all other terms and conditions of the contract.

Discounts

(a) Prompt Payment: Net 30 days (No additional discounts offered).

(b) Quantity: *No additional discounts offered.*

(c) Dollar Volume: *No additional discounts offered.*

(d) Government Educational Institutions: *No additional discounts offered.*

(e) Discount for use of Government Commercial Credit Card: *No additional discounts offered.*

(f) Other: *No additional discounts offered.*

Trade Agreements Act of 1979, as Amended

All items are U.S. made end products, designated country end products, Caribbean Basin country end products, Canadian end products, or Mexican end products as defined in the Trade Agreements Act of 1979, as amended.

Statement Concerning Availability of Export Packing

Not Applicable.

Small Requirements

The minimum dollar value of orders to be issued is $100.

Maximum Order

(All dollar amounts are exclusive of any discount for prompt payment.) Maximum

Order for each the following Special Items Numbers (SINs) is $500,000.

Special Item 132-3 - Leasing of Product

Special Item 132-33 - Perpetual Software License

Special Item 132-51 - Information Technology (IT) Professional Services

Special Item 132-52 - Electronic Commerce Services

Use of Federal Supply Service Information Technology Schedule Contracts In Accordance With (IAW) FAR 8.404

[NOTE: Special ordering procedures have been established for SINs 132-51 IT Professional Services and 132-52 EC Services; refer to the terms and conditions for those SINs.]

Orders placed pursuant to a Multiple Award Schedule (MAS), using the procedures in FAR 8.404, are considered to be issued pursuant to full and open competition. Therefore, when placing orders under Federal Supply Schedules, ordering offices need not seek further competition, synopsize the requirement, make a separate determination of fair and reasonable pricing, or consider small business set-asides in accordance with subpart 19.5. GSA has already determined the prices of items under schedule contracts to be fair and reasonable. By placing an order against a schedule using the procedures outlined below, the ordering office has concluded that the order represents the best value and results in the lowest overall cost alternative (considering price, special features, administrative costs, etc.) to meet the Government's needs.

(a) Orders placed at or below the micro-purchase threshold. Ordering offices can

place orders at or below the micro-purchase threshold with any Federal Supply Schedule Contractor.

(b) **Orders exceeding the micro-purchase threshold but not exceeding the maximum order threshold.** Orders should be placed with the Schedule Contractor that can provide the supply or service that represents the best value. Before placing an order, ordering offices should consider reasonably available information about the supply or service offered under MAS contracts by using the "GSA Advantage!" on-line shopping service, or by reviewing the catalogs/pricelists of at least three Schedule Contractors and selecting the delivery and other options available under the schedule that meets the agency's needs. In selecting the supply or service representing the best value, the ordering office may consider—

(1) Special features of the supply or service that are required in effective program performance and that are not provided by a comparable supply or service;

(2) Trade-in considerations;

(3) Probable life of the item selected as compared with that of a comparable item;

(4) Warranty considerations;

(5) Maintenance availability;

(6) Past performance; and

(7)Environmental and energy efficiency considerations.

(c) **Orders exceeding the maximum order threshold.** Each schedule contract has an established maximum order threshold. This threshold represents the point where it is advantageous for the ordering office to seek a price reduction. In addition to following the procedures in paragraph b, above, and before placing an order that exceeds the maximum order threshold, ordering offices shall—

(1) Review additional Schedule Contractors' catalogs/pricelists or use the "GSA Advantage!" on-line shopping service;

(2) Based upon the initial evaluation, generally seek price reductions from the Schedule Contractor(s) appearing to provide the best value (considering price and other factors); and

(3) After price reductions have been sought, place the order with the Schedule Contractor that provides the best value and results in the lowest overall cost alternative. If further price reductions are not offered, an order may still be placed, if the ordering office determines that it is appropriate.

NOTE: For orders exceeding the maximum order threshold, the Contractor may:

(1) Offer a new lower price for this requirement (the Price Reductions clause is not applicable to orders placed over the maximum order in FAR 52.216-19 Order Limitations);

(2) Offer the lowest price available under the contract; or

(3) Decline the order (orders must be returned in accordance with FAR 52.216-19).

(d) Blanket purchase agreements (BPAs). The establishment of Federal Supply Schedule BPAs is permitted when following the ordering procedures in FAR 8.404. All schedule contracts contain BPA provisions. Ordering offices may use BPAs to establish accounts with Contractors to fill recurring requirements. BPAs should address the frequency of ordering and invoicing, discounts, and delivery locations and times.

(e) Price reductions. In addition to the circumstances outlined in paragraph c, above, there may be instances when ordering offices will find it advantageous to request a price reduction. For example, when the ordering office finds a schedule supply or service elsewhere at a lower price or when a BPA is being established to fill recurring requirements, requesting a price reduction could be advantageous. The potential volume of orders under these agreements, regardless of the size of the individual order, may offer the ordering office the opportunity to secure greater discounts. Schedule Contractors are not required to pass on to all schedule users a price reduction extended only to an individual agency for a specific order.

(f) Small business. For orders exceeding the micro-purchase threshold, ordering offices should give preference to the items of small business concerns when two or more items at the same delivered price will satisfy the requirement.

(g) **Documentation.** Orders should be documented, at a minimum, by identifying the Contractor the item was purchased from, the item purchased, and the amount paid. If an agency requirement in excess of the micro-purchase threshold is defined so as to require a particular brand name, product, or feature of a product peculiar to one manufacturer, thereby precluding consideration of a product manufactured by another company, the ordering office shall include an explanation in the file as to why the particular brand name, product, or feature is essential to satisfy the agency's needs.

Federal Information Technology/Telecommunication Standards Requirements

Federal departments and agencies acquiring products from this Schedule must comply with the provisions of the Federal Standards Program, as appropriate (reference: NIST Federal Standards Index). Inquiries to determine whether or not specific products listed herein comply with Federal Information Processing Standards (FIPS) or Federal Telecommunication Standards (FED-STDS), which are cited by ordering offices, shall be responded to promptly by the Contractor.

Federal Information Processing Standards Publications (FIPS PUBS)

Information Technology products under this Schedule that do not conform to Federal Information Processing Standards (FIPS) should not be acquired unless a waiver has been granted in accordance with the applicable "FIPS Publication." The U.S. Department of Commerce, National Institute of Standards and Technology (NIST) issue Federal Information Processing Standards Publications (FIPS PUBS), pursuant to National Security Act. Information concerning their availability and applicability should be obtained from the NTIS, 5285 Port Royal Road, Springfield, Virginia 22161. FIPS PUBS include voluntary standards when these are adopted for Federal use. Individual orders for FIPS PUBS should be referred to the NTIS Sales Office, and orders for subscription service should be referred to the NTIS Subscription Officer, both at the above address, or telephone number (703) 487-4650.

Federal Telecommunication Standards (FED-STDS)

Telecommunication products under this Schedule that do not conform to Federal Telecommunication Standards (FED-STDS) should not be acquired unless a waiver has been granted in accordance with the applicable "FED-STD." The U.S. Department of Commerce, NIST issue Federal Telecommunication Standards, pursuant to National Security Act. Ordering information and information concerning the availability of FED-STDS should be obtained from the GSA, Federal Supply Service, Specification Section, 470 East L'Enfant Plaza, Suite 8100, SW, Washington, DC 20407, telephone number (202) 619-8925. Please include a self-addressed mailing label when requesting information by mail. Information concerning their applicability can be obtained by writing or calling the U.S. Department of Commerce, National Institute of Standards and Technology, Gaithersburg, MD 20899, telephone number (301) 975-2833.

Security Requirements

In the event security requirements are necessary, the ordering activities may incorporate, in their delivery order(s), a security clause in accordance with current laws, regulations, and individual agency policy; however, the burden of administering the security requirements shall be with the ordering agency. If any costs are incurred as a result of the inclusion of security requirements, such costs will be negotiated with the Schedule Contractor on an open market basis, outside the scope of the contract.

Contract Administration for Ordering Offices

Any ordering office, with respect to any one or more delivery orders placed by it under this contract, may exercise the same rights of termination as might the GSA Contracting Officer under provisions of FAR 52.249-1, 52.249-2, and 52.249-8.

GSA Advantage!

The GSA Advantage! is an on-line, interactive electronic information and ordering system that provides on-line access to vendors' schedule prices with ordering information. GSA Advantage! Will allow the user to:

Perform various searches across all contracts including, but not limited to:

(a) Manufacturer;

(b) Manufacturer's Part Number; and

(c) Product category(ies).

Agencies can browse GSA Advantage! by accessing the Internet World Wide Web utilizing a browser (ex.: Netscape). The Internet address is http://www.gsa.gov.

Purchase of OPEN MARKET ITEMS

NOTE: Open Market Items are also known as incidental items, noncontract items, non-Schedule items, and items not on a Federal Supply Schedule contract.

For administrative convenience, an ordering office contracting officer may add items not on the Federal Supply MAS - referred to as open market items - to a Federal Supply Schedule BPA or an individual task or delivery order, only if -

(1) All applicable regulations pertaining to the purchase of the items not on the Federal Supply Schedule have been followed (e.g., publicizing (Part 5), contracting methods (Parts 13, 14, and 15), and small business programs (Part 19).

(2) The ordering office contracting officer has determined the price for the items not on the Federal Supply Schedule is fair and reasonable.

(3) The items are clearly labeled on the order as items not on the Federal Supply Schedule.

(4) All clauses applicable to items not on the Federal Supply Schedule are included in the order.

Contractor Commitments, Warranties and Representations

(a) For the purpose of this contract, commitments, warranties and representations include, in addition to those agreed to for the entire schedule contract:

(1) Time of delivery/installation quotations for individual orders;

(2) Technical representations and/or warranties of products concerning performance, total system performance and/or configuration, physical, design and/or functional characteristics and capabilities of a product/equipment/service/software package submitted in response to requirements which result in orders under this schedule contract.

(3) Any representations and/or warranties concerning the products made in any literature, description, drawings and/or specifications furnished by the contractor.

(b) The above is not intended to enlarge the scope of this schedule contract for individual orders. Terms and conditions of any orders are limited strictly to those specified in the schedule contract and pricelist and agreed to by GSA.

Overseas Activities

The geographic scope of this contract for network services is the 48 contiguous states and the District of Columbia. Overseas activities for AT&T Managed Internet Service, DSL Services, Business Internet Services, SafeNet VPN Services are not applicable to this contract at the present time. For Dedicated Hosting Services-Managed Service, international hosting options are available. Orders for Dedicated Hosting Services-Managed Service must be placed domestically in the 48 contiguous states and the District of Columbia. Professional Services offered under SIN 132-51 are available worldwide.

Blanket Purchase Agreements (BPAs)

Federal Acquisition Regulation (FAR) 13.201(a) defines BPAs as "…a simplified method of filling anticipated repetitive needs for supplies or services by establishing 'charge accounts' with qualified sources of supply." The use of BPAs under the Federal Supply Schedule Program is authorized in accordance with FAR 13.202(c)(3), which reads, in part, as follows:

"BPAs may be established with Federal Supply Schedule Contractors, if not inconsistent with the terms of the applicable schedule contract."

Federal Supply Schedule contracts contain BPA provisions to enable schedule users to maximize their administrative and purchasing savings. This feature permits schedule users to set up "accounts" with Schedule Contractors to fill recurring requirements. These accounts establish a period for the BPA and generally address issues such as the frequency of ordering and invoicing, authorized callers, discounts, delivery locations and times. Agencies may qualify for the best quantity/volume discounts available under the contract, based on the potential volume of business that may be generated through such an agreement, regardless of the size of the individual orders. In addition, agencies may be able to secure a discount higher than that available in the contract based on the aggregate volume of business possible under a BPA. Finally, Contractors may be open to a progressive type of discounting where the discount would increase once the sales accumulated under the BPA reach certain prescribed levels. Use of a BPA may be particularly useful with the new Maximum Order feature. See the Suggested Format, contained in this Schedule Pricelist, for customers to consider when using this purchasing tool.

Contractor Team Arrangements

Federal Supply Schedule Contractors may use "Contractor Team Arrangements" (see FAR 9.6) to provide solutions when responding to a customer agency requirements. The policy and procedures outlined in this part will provide more flexibility and allow innovative acquisition methods when using the Federal Supply Schedules. See the additional information regarding Contractor Team Arrangements in this Schedule Pricelist.

Installation, De-installation, Reinstallation

The Davis-Bacon Act (40 U.S.C. 276a-276a-7) provides that contracts in excess of $2,000 to which the United States or the District of Columbia is a party for construction, alteration, or repair (including painting and decorating) of public buildings or public works with the United States, shall contain a clause that no laborer or mechanic employed directly upon the site of the work shall received less than the prevailing wage rates as determined by the Secretary of Labor. The requirements of the Davis-Bacon Act do not apply if the construction work is incidental to the furnishing of supplies, equipment, or services. For example, the requirements do not apply to simple installation or alteration of a public building or public work that is incidental to furnishing supplies or equipment under a supply contract. However, if the construction, alteration or repair is segregable and exceeds $2,000, then the requirements of the Davis-Bacon Act applies.

The requisitioning activity issuing the task order against this contract will be responsible for proper administration and enforcement of the Federal labor standards covered by the Davis-Bacon Act. The proper Davis-Bacon wage determination will be issued by the ordering activity at the time a request for quotations is made for applicable construction classified installation, de-installation, and reinstallation services under SIN 132-8.

Section 508 Compliance

If applicable, Section 508 compliance information on the supplies and services in this contract are available in Electronic and Information Technology (EIT) at the following:

Section 508 does not apply to AT&T Managed Internet Service, DSL Services, and Dedicated Hosting Services-Managed Service as these services and products are located in spaces frequented only by service personnel for the maintenance, repair, or occasional monitoring of equipment.

For AT&T Business Internet Service and Token Authentication the following paragraph applies:

EIT delivered under this contract and listed below shall be capable, at the time of its delivery, when used in accordance with the contractor's associated documents, and other written information provided to the government, of providing comparable access to individuals with disabilities consistent with the provisions of the Architectural and Transportation Barriers Compliance Board set out in 36 C.F.R. Part 1194 applicable to this contract at the time of award, provided that any assistive technologies used with the listed EIT properly interoperates with it and other assistive technologies.

SafeNet VPN Service Section 508 compliance information can be found at www.safenet.biz.

The EIT standard can be found at: www.Section508.gov/.

Prime Contractor Ordering From Federal Supply Schedules

Prime Contractors (on cost reimbursement contracts) placing orders under Federal Supply Schedules, on behalf of a Federal Agency, shall follow the terms of the applicable schedule and authorization and include with each order -

(a) A copy of the authorization from the Agency with whom the contractor has the prime contract (unless a copy was previously furnished to the Federal Supply Schedule contractor); and

(b) The following statement:

This order is placed under written authorization from _____dated _____. In the event of any inconsistency between the terms and conditions of this order and those of your Federal Supply Schedule contract, the latter will govern.

Terms And Conditions Applicable

to Information Technology
(IT)

TERMS AND CONDITIONS APPLICABLE TO LEASING OF GENERAL PURPOSE COMMERCIAL INFORMATION TECHNOLOGY PRODUCTS (SPECIAL ITEM NUMBER 132-3)

LEASE TYPES

The ordering activity will consider proposals for the following lease types:

a. Lease to Ownership,
b. Lease with Option to Own, and
c. Step Lease.

Orders for leased products must specify the leasing type.

OPTION 1:

1. STATEMENT

a. It is understood by all parties to this contract that orders issued under this SIN shall constitute a lease arrangement. Unless the ordering activity intends to obligate other than annual appropriations to fund the lease, the base period of the lease is from the date of the product acceptance through September 30 of the fiscal year in which the order is placed.

b. Agencies are advised to follow the guidance provided in Federal Acquisition Regulation (FAR) Subpart 7.4 Product Lease or Purchase and OMB Circular A-11. Agencies are responsible for the obligation of funding consistent with all applicable legal principles when entering into any lease arrangement.

2. FUNDING AND PERIODS OF LEASING ARRANGEMENTS

a. Annual Funding. When annually appropriated funds are cited on an order for leasing, the following applies:

(1) The base period of an order for any lease executed by the ordering activity shall be for the duration of the fiscal year. All ordering activity renewal options under the lease shall be specified in the delivery order. All orders for leasing shall remain in effect through September 30 of the fiscal year or the planned expiration date of the lease, whichever is earlier, unless the ordering activity exercises its rights hereunder to acquire title to the product prior to the planned expiration date or unless the ordering activity exercise its right to terminate under FAR 52.212-4. Orders under the lease shall not be deemed to obligate succeeding fiscal year's funds or to otherwise commit the ordering activity to a renewal.

(2) All orders for leasing shall automatically terminate on September 30, unless the ordering activity notifies the Contractor in writing thirty (30) calendar days prior to the expiration of such orders of the ordering activity's intent to renew. Such notice to renew shall not bind the ordering activity. The ordering activity has the option to renew each year at the original rate in effect at the time the order is placed. This rate applies for the duration of the order. If the ordering activity exercises its option to renew, the renewal order, shall be issued within 15 days after funds become available for obligation by the ordering activity, or as specified in the initial order. No termination fees shall apply if the ordering activity does not exercise an option.

b. Crossing Fiscal Years Within Contract Period. Where an ordering activity has specific authority to cross fiscal years with annual appropriations, the ordering activity may place an order under this option to lease product for a period up to the expiration of its period of appropriation availability, or twelve months, whichever occurs later, notwithstanding the intervening fiscal years.

3. DISCONTINUANCE AND TERMINATION

Notwithstanding any other provision relating to this SIN, the ordering activity may terminate products leased under this agreement, at any time during a fiscal year in accordance with the termination provisions contained in FAR 52.212-4. (l) Termination for the ordering activity's convenience, or (m) Termination for cause. Additionally, no termination for cost or fees shall be charged for non-renewal of an option.

****

OPTION 2

To the extent an Offeror wishes to propose alternative lease terms and conditions that provide for lower discounts/prices based on the ordering activity's stated intent to fulfill the projected term of a lease including option years, while at the same time including separate charges for early end of the lease, the following terms apply. These terms address the timing and extent of the ordering activity's financial obligation including any potential charges for early end of the lease.

1. LEASING PRICE LIST NOTICE:

Contractors must include the following notice in their contract price list for SIN 132-3:

"The ordering activity is responsible for the obligation of funds consistent with applicable law. Agencies are advised to review the lease terms and conditions contained in this price list prior to ordering and obligating funding for a lease."

2. STATEMENT OF ORDERING ACTIVITY INTENT:

(a) The ordering activity and the Contractor understand that a delivery order issued pursuant to this SIN is a lease arrangement and contemplates the use of the product for the term of the lease specified in such delivery order (the "Lease Term"). In that regard, the ordering Activity, as lessee, understands that the lease provisions contained herein and the rate established for the delivery order are premised on the ordering Activity's intent to fulfill that agreement, including acquiring products for the period of time specified in the order. Each lease hereunder shall be initiated by a delivery order which shall, either through a statement of work or other attachment, specify the product being leased, and the required terms of the transaction.

(b) Each ordering activity placing a delivery order under the terms of this option intends to exercise each renewal option and to extend the lease until completion of the Lease Term so long as the need of the ordering activity for the product or functionally similar product continues to exist and funds are appropriated. Contractor may request information from the ordering activity concerning the essential use of the products.

3. LEASE TERM:

(a) The date on which the ordering activity accepts the products is the Commencement Date of the lease. For acceptance to occur, the products must operate in accordance with the product's published specifications and statement of work. Acceptance shall be in accordance with the terms of the contract or as otherwise negotiated by the ordering activity and the Contractor.

(b) Any lease is executed by the ordering activity on the basis that the known requirement for such product exceeds the initial base period of the delivery order, which is typically 12 months, or for the remainder of the fiscal year. Pursuant to FAR 32.703-3(b), delivery orders with options to renew that are funded by annual (fiscal year) appropriations may provide for initial base periods and option periods that cross fiscal years as long as the initial base period or each option period does not exceed a 12 month period. Defense agencies must also consider DOD FAR supplement (DFAR) 232.703-3(b) in determining whether to use cross fiscal year funding. This cross fiscal year authority does not apply to multi-year leases.

(c) The total Lease Term will be specified in each delivery order, including any relevant renewal options of the ordering activity. All delivery orders, whether for the initial base period or renewal period, shall remain in effect through September 30 of the fiscal year (unless extended by statute), through any earlier expiration date specified in the delivery order, or until the ordering activity exercises its rights hereunder to acquire title to the product prior to such expiration date. The ordering activity, at its discretion, may exercise each option to extend the term of the lease through the lease term. Renewal delivery orders shall not be issued for less than all of the product and/or software set forth in the original delivery order**.** Delivery orders under this SIN shall not be deemed to obligate succeeding fiscal year funds. The ordering activity shall provide the Contractor with written notice of exercise of each renewal option as soon as practicable. Notice requirements may be negotiated on an order-by-order basis.

(d) Where an ordering activity's specific appropriation or procurement authority provides for contracting beyond the fiscal year period, the ordering activity may place a delivery order for a period up to the expiration of the Lease Term, or to the expiration of the period of availability of the multi-year appropriation, or whatever is appropriate under the applicable circumstance.

4. LEASE TERMINATION:

(a) The ordering activity must elect the Lease Term of the relevant delivery order. The Contractor (and assignee, if any) will rely on the ordering activity's representation of its intent to fulfill the full Lease Term to determine the monthly lease payments calculated herein.

(i) The ordering activity may terminate or not renew leases under this option at no cost, pursuant to a Termination for Non-Appropriation as defined herein (see paragraph (c) below). In any other event, the ordering activity's contracting officer may either terminate the relevant delivery order for cause or Termination for Convenience in accordance with FAR 52.212-4 paragraphs (l) and (m).

(ii) The Termination for Convenience at the end of a fiscal year allows for separate charges for the early end of the lease (see paragraph (d) below). In the event of termination for the convenience of the ordering activity, the ordering activity may be liable only up to the amount beyond the order's Termination Ceiling. Any termination charges calculated under the Termination for Convenience clause must be determined or identified in the delivery order or in the lease agreement.

(b) Termination for Convenience of the Ordering Activity**:** Leases entered into under this option may not be terminated except by the ordering activity's contracting office responsible for the delivery order in accordance with FAR 52.212-4, Contract Terms and Conditions-Commercial Items, paragraph (l), *Termination for Convenience of the ordering activity.* The costs charged to the ordering activity as the result of any Termination for Convenience of the ordering activity must be reasonable and may not exceed the sum of the fiscal year's payment obligations less payments made to date of termination plus the Termination Ceiling

(c) Termination for Non-Appropriation: The ordering activity reasonably believes that the bona fide need will exist for the entire Lease Term and corresponding funds in an amount sufficient to make all payment for the lease Term will be available to the ordering activity. Therefore, it is unlikely that leases entered into under this option will terminate prior to the full Lease Term. Nevertheless, the ordering activity's contracting officer may terminate or not renew leases at the end of any initial base period or option period under this paragraph if (a) it no longer has a bona fide need for the product or functionally similar product; or (b) there is a continuing need, but adequate funds have not been made available to the ordering activity in an amount sufficient to continue to make the lease payments. If this occurs, the ordering activity will promptly notify the Contractor, and the product lease will be terminated at the end of the last fiscal year for which funds were appropriated. Substantiation to support a termination for non-appropriation shall be provided to the Contractor upon request.

(d) Termination Charges: At the initiation of the lease, termination ceilings will be established for each year of the lease term. The termination ceiling is a limit on the amount that a Contractor may be paid by the ordering activity on the Termination for Convenience of a lease. No claim will be accepted for future costs: supplies, maintenance, usage charges or interest expense beyond the date of termination. In accordance with the bona fide needs rule, all termination charges must reasonably represent the value the ordering activity received for the work performed based upon the shorter lease term. No Termination for Convenience costs will be associated with the expiration of the lease term.

(e) At the order level, the ordering activity may, consistent with legal principles, negotiate lower monthly payments or rates based upon appropriate changes to the termination conditions in this section.

****

LEASE PROVISIONS COMMON TO ALL TYPES OF LEASE AGREEMENTS

1. ORDERING PROCEDURES:

(a) When an ordering activity expresses an interest in leasing a product(s), the ordering activity will provide the following information to the prospective Contractor:

(i) Which product(s) is (are) required.
(ii) The required delivery date.
(iii) The proposed lease plan and term of the lease.
(iv) Where the product will be located.

(v) Description of the intended use of the product.
(vi) Source and type of appropriations to be used.

(b) The Contractor will respond with:

(i) Whether the Contractor can provide the required product.
(ii) The estimated residual value of the product (Lease with Option to Own and Step Lease only).
(iii) The monthly payment based on the rate.
(iv) The estimated cost, if any, of applicable State or local taxes. State and local personal property taxes are to be estimated as separate line items in accordance with FAR 52.229-1, which may be identified and added to the monthly lease payment.
(v) A confirmation of the availability of the product on the required delivery date.
(vi) Extent of warranty coverage, if any, of the leased products.
(vii) The length of time the quote is valid.

(c) The ordering activity may issue a delivery order to the Contractor based on the information set forth in the Contractor's quote. In the event that the ordering activity does not issued a delivery order within the validity period stated in the Contractor's quote letter, the quote shall expire.

2. ASSIGNMENT OF CLAIMS:

GSAR 552.232-23, Assignment of Claims, is incorporated herein by reference as part of these lease provisions. The ordering activity's contracting officer will acknowledge the assignment of claim for a lease in accordance with FAR 32.804-5. The extent of the assignee's protection is in accordance with FAR 32.804. Any setoff provision must be in accordance with FAR 32.803.

3. PEACEFUL POSSESSION AND UNRESTRICTED USE:

In recognition of the types of products available for lease and the potential adverse impact to the ordering activity's mission, the ordering activity's quiet and peaceful possession and unrestricted use of the product shall not be disturbed in the event the product is sold by the Contractor, or in the event of bankruptcy of the Contractor, corporate dissolution of the Contractor, or other event. The product shall remain in the possession of the ordering activity until the expiration of the lease. Any assignment, sale, bankruptcy, or other transfer of the leased product by the Contractor will not relieve the Contractor of its obligations to the ordering activity, and will not change the ordering activity's duties or increase the burdens or risks imposed on the ordering activity.

4. COMMENCEMENT OF LEASE:

The date on which the ordering activity accepts the products is the Commencement Date of the lease. Acceptance is as defined elsewhere in the contract, or as further specified in the order.

5. INSTALLATION AND MAINTENANCE:

a. Installation and Maintenance, when applicable, normally are not included in the charge for leasing. The Contractor may require the ordering activity to obtain installation and maintenance services from a qualified source. The ordering activity may obtain installation and/or maintenance on the open market, from the Contractor's schedule contract, or from other sources. The ordering activity may also perform installation and/or maintenance in house, if qualified resources exist. In any event, it is the responsibility of the ordering activity to ensure that maintenance is in effect for the Lease term for all products leased.

b. When installation and/or maintenance are ordered under this schedule to be performed by the Contractor, the payments, terms and conditions as stated in this contract apply. The rates and terms and conditions in effect at the time the order is issued shall apply during any subsequent renewal period of the lease. The maintenance rates and terms and conditions may be added to the lease payments with mutual agreement of the parties.

6. MONTHLY PAYMENTS:

a. Prior to the placement of an order under this Special Item Number, the ordering activity and the Contractor must agree on a "base value" for the products to be leased. For Lease to Ownership (Capital Lease) the base value will be the contract purchase price (less any discounts). For Lease with Option to Own (Operating Lease), the base value will be the contract purchase price (less any discounts), less a mutually agreed upon residual value (pre-stated purchase option price at the conclusion of the lease) for the

products. The residual value will be used in the calculation of the original lease payment, lease extension payments, and the purchase option price.

b. To determine the initial lease term payment, the Contractor agrees to apply the negotiated lease factor to the agreed upon base value: **For FMV leases, the lease factor will be 2.14% (or less) over the rate for like term (T-bill) at the most current US Treasury auction. For $1.00 purchase option leases, the lease factor will be 4.22% (or less) over like term (T-bill) at the most current US Treasury auction.**

For Example: Lease factor one (1) percent over the rate for the three year (or other term) Treasury Bill (T-bill) at the most current U. S. Treasury auction.

The lease payment may be calculated by using a programmed business calculator or by using "rate" functions provided in commercial computer spreadsheets (e.g., Lotus 1-2-3, Excel).

c. For any lease extension, the extension lease payment will be based on the original residual value, in lieu of the purchase price. The ordering activity and the Contractor shall agree on a new residual value based on the estimated fair market price at the end of the extension. The formula to determine the lease payment will be that in 6.b. above.

d. The purchase option price will be the fair market value of the product or payment will be based upon the unamortized principle, as shown on the payment schedule as of the last payment prior to date of transfer of ownership, whichever is less.

NOTE: At the order level, ordering activity may elect to obtain a lower rate for the lease by setting the purchase option price as either, the fair market value of the product or unamoritized principle. The methodology for determining lump sum payments may be identified in the pricelist.

e. The point in time when monthly rates are established is subject to negotiation and evaluation at the order level.

In the event the ordering activity desires, at any time, to acquire title to product leased hereunder, the ordering activity may make a one-time lump sum payment.

7. LEASE END/DISCONTINUANCE OPTIONS:

a. Upon the expiration of the Lease Term, Termination for Convenience, or Termination for Non-Appropriation, the ordering activity will return the Product to the Contractor unless the ordering activity by 30 days written notice elects either:

(i) to purchase the product for the residual value of the product, or

(ii) to extend the term of the Lease, as mutually agreed. To compute the lease payment, the residual value from the preceding lease shall be the initial value of the leased product. A new residual value shall be negotiated for the extended lease and new lease payments shall be computed.

b. Relocation - The ordering activity may relocate products to another location within the ordering activity with prior written notice. No other transfer, including sublease, is permitted. ordering activity shall not assign, transfer or otherwise dispose of any products, or any interest therein, or crate or suffer any levy, lien or encumbrance then except those created for the benefit of Contractor or it's assigns.

c. Returns:

(i) Within fourteen (14) days after the date of expiration, non-renewal or termination of a lease, the ordering activity shall, at its own risk and expense, have the products packed for shipment in accordance with manufacturer's specifications and return the products to Contractor at the location specified by Contractor in the continental US, in the same condition as when delivered, ordinary wear and tear excepted. Any expenses necessary to return the products to good working order shall be at ordering activity's expense.

(ii) The Contractor shall conduct a timely inspection of the returned products and within 45 days of the return, assert a claim if the condition of the product exceeds normal wear and tear.

(iii) Product will be returned in accordance with the terms of the contract and in accordance with Contractor instruction.

(iv) With respect to software, the ordering activity shall state in writing to the Contractor that it has:

(1) deleted or disabled all files and copies of the software from the equipment on which it was installed;
(2) returned all software documentation, training manuals, and physical media on which the software was delivered; and
(3) has no ability to use the returned software.

8. UPGRADES AND ADDITIONS:

a. The ordering activity may affix or install any accessory, addition, upgrade, product or device on the product ("additions") provided that such additions:

(1) can be removed without causing material damage to the product;

(2) do not reduce the value of the product; and

(3) are obtained from or approved by the Contractor, and are not subject to the interest of any third party other than the Contractor.

b. Any other additions may not be installed without the Contractor's prior written consent. At the end of the lease term, the ordering activity shall remove any additions which:

(1) were not leased from the Contractor, and

(2) are readily removable without causing material damage or impairment of the intended function, use, or value of the product, and restore the product to its original configuration.

c. Any additions that are not so removable will become the Contractor's property (lien free).

d. Leases of additions and upgrades must be co-terminus with that of the product.

9. RISK OF LOSS OR DAMAGE:

The ordering activity is relieved from all risk of loss or damage to the product during periods of transportation, installation, and during the entire time the product is in possession of the ordering activity, except when loss or damage is due to the fault or negligence of the ordering activity. The ordering activity shall assume risk of loss or damage to the product during relocation, (i.e., moving the product from one ordering activity location to another ordering activity location), unless the Contractor shall undertake such relocation.

10. TITLE:

During the lease term, product shall always remain the property of the Contractor. The ordering activity shall have no property right or interest in the product except as provided in this leasing agreement and shall hold the product subject and subordinate to the rights of the Contractor. Software and software licenses shall be deemed personal property. The ordering activity shall have no right or interest in the software and related documentation except as provided in the license and the lease. Upon the Commencement Date of the Lease Term, the ordering activity shall have an encumbered license to use the software for the Lease Term. The ordering activity's encumbered license rights in the software will be subject to the same rights as provided to a purchaser of a license under the terms of this contract except that the ordering activity will not have an unencumbered, paid-up license until it has made all lease payments for the full Lease Term in the case of an Lease To Ownership or has otherwise paid the applicable purchase option price.

11. TAXES:

The lease payments, purchase option prices, and interest rates identified herein exclude all state and local taxes levied on or measured by the contract or sales price of the product furnished hereunder. The ordering activity will be invoiced for any such taxes as Contractor receives such tax notices or assessments from the applicable local taxing authority. Pursuant to the provisions of FAR 52.229-1 (Deviation – May 2003), State and Local Taxes, the ordering activity agrees to pay tax or provide evidence necessary to support an exemption from the tax.

12. OPTION TO PURCHASE EQUIPMENT (FEB 1995) (FAR 52.207-5)

(a) The Government may purchase the equipment provided on a lease or rental basis under this contract. The Contracting Officer may exercise this option only by providing a unilateral modification to

the Contractor. The effective date of the purchase will be specified in the unilateral modification and may be any time during the period of the contract, including any extensions thereto.

(b) Except for final payment and transfer of title to the Government, the lease or rental portion of the contract becomes complete and lease or rental charges shall be discontinued on the day immediately preceding the effective date of purchase specified in the unilateral modification required in paragraph (a) of this clause.

(c) The purchase conversion cost of the equipment shall be computed as of the effective date specified in the unilateral modification required in paragraph (a) of this clause, on the basis of the purchase price set forth in the contract, minus the total purchase option credits accumulated during the period of lease or rental, calculated by the formula contained elsewhere in this contract.

(d) The accumulated purchase option credits available to determine the purchase conversion cost will also include any credits accrued during a period of lease or rental of the equipment under any previous Government contract if the equipment has been on continuous lease or rental. The movement of equipment from one site to another site shall be "continuous rental."

Term Software Licenses (Special Item Number 132-32) Perpetual Software Licenses (Special Item Number 132-33) Maintenance (Special Item Number 132-34) of General Purpose Commercial Information Technology Software

1. Technical Services

The Contractor, without additional charge to the ordering activity, shall provide a hot line technical support number (to be provided when the license is purchased) for the purpose of providing user assistance and guidance in the implementation of the software. The technical support number is available from 8:00 AM to 8:00 PM (EST).

2. Inspection of Software

The Contractor shall only tender for acceptance those items that conform to the requirements of this contract. The ordering activity reserves the right to inspect or test any software that has been tendered for acceptance. The ordering activity may require repair or replacement of nonconforming software at no increase in contract price. The ordering activity must exercise its post acceptance rights (1) within a reasonable time after the defect was discovered or should have been discovered; and (2) before any substantial change occurs in the condition of the software, unless the change is due to the defect in the software.

3. Software Maintenance

a. Software maintenance service shall include the following:

+ Centralized requirements/development and testing of all new tool releases - By

performing rigorous testing and evaluation in a laboratory environment, the implementation time and risk associated with production rollout is minimized.

+ Requirements pooling - AGMEMS Standard, Short-Stack, and Lite middleware is enhanced in concert with regular releases of vendor software and middleware. Release features are derived from multiple client requirements. To keep the base platform feature set constant across all customers, new features are available to all Government customers at no additional charge.

+ Software control of COTS and middleware - AT&T incorporates software configuration control for all vendor software and AT&T middleware. AT&T uses a regular release schedule to incorporate new features into the platform. These new features may comprise new vendor software releases or new AT&T middleware features.

In the unlikely event that a software patch is required to the platform, AT&T provides strict configuration control of these patches and includes them in the next standard release.

+ COTS tool version control - AT&T keeps track of all AGMEMS vendor software releases. New releases of vendor software are tested rigorously in the lab before being incorporated into an AGMEMS release.

b. Invoices for maintenance service shall be submitted by the Contractor on a quarterly or monthly basis, after the completion of such period. Maintenance charges must be paid in arrears (31 U.S.C. 3324). PROMPT PAYMENT DISCOUNT, IF APPLICABLE, SHALL BE SHOWN ON THE INVOICE.

4. Periods of Term Licenses (132-32) and Maintenance (132-34)

a. The Contractor shall honor orders for periods for the duration of the contract period or a lessor period of time.

b. Term licenses and/or maintenance may be discontinued by the ordering activity on thirty (30) calendar days written notice to the Contractor.

c. Annual Funding. When annually appropriated funds are cited on an order for term licenses and/or maintenance, the period of the term licenses and/or maintenance shall automatically expire on September 30 of the contract period, or at the end of the contract period, whichever occurs first. Renewal of the term licenses and/or maintenance orders citing the new appropriation shall be required, if the term licenses and/or maintenance is to be continued during any remainder of the contract period.

d. Cross-Year Funding Within Contract Period. Where an ordering activity's specific appropriation authority provides for funds in excess of a 12 month (fiscal year) period, the ordering activity may place an order under this schedule contract for a period up to the expiration of the contract period, notwithstanding the intervening fiscal years.

e. Ordering activities should notify the Contractor in writing thirty (30) calendar days prior to the expiration of an order, if the term licenses and/or maintenance is to be terminated

at that time. Orders for the continuation of term licenses and/or maintenance will be required if the term licenses and/or maintenance is to be continued during the subsequent period

5. Conversion from Term License to Perpetual License (Not Applicable to AT&T AGMEMS Software.)

a. The ordering activity may convert term licenses to perpetual licenses for any or all software at any time following acceptance of software. At the request of the ordering activity the Contractor shall furnish, within ten (l0) calendar days, for each software product that is contemplated for conversion, the total amount of conversion credits which have accrued while the software was on a term license and the date of the last update or enhancement.

b. Conversion credits which are provided shall, within the limits specified, continue to accrue from one contract period to the next, provided the software remains on a term license within the ordering activity.

c. The term license for each software product shall be discontinued on the day immediately preceding the effective date of conversion from a term license to a perpetual license.

d. The price the ordering activity shall pay will be the perpetual license price that prevailed at the time such software was initially ordered under a term license, or the perpetual license price prevailing at the time of conversion from a term license to a perpetual license, whichever is the less, minus an amount equal to _____ % of all term license payments during the period that the software was under a term license within the ordering activity.

6. Term License Cessation (Not Applicable to AT&T AGMEMS Software.)

a. After a software product has been on a continuous term license for a period of _____ * months, a fully paid-up, non-exclusive, perpetual license for the software product shall automatically accrue to the ordering activity. The period of continuous term license for automatic accrual of a fully paid-up perpetual license does not have to be achieved during a particular fiscal year; it is a written Contractor commitment which continues to be available for software that is initially ordered under this contract, until a fully paid-up perpetual license accrues to the ordering activity. However, should the term license of the software be discontinued before the specified period of the continuous term license has been satisfied, the perpetual license accrual shall be forfeited.

b. The Contractor agrees to provide updates and maintenance service for the software after a perpetual license has accrued, at the prices and terms of Special Item Number l32-34, if the licensee elects to order such services. Title to the software shall remain with the Contractor.

7. Utilization Limitations - (132-32, 132-33, and 132-34)

a. Software acquisition is limited to commercial computer software defined in FAR Part 2.101.

b. When acquired by the ordering activity, commercial computer software and related documentation so legend shall be subject to the following:

(1) Title to and ownership of the software and documentation shall remain with the Contractor, unless otherwise specified.

(2) For AT&T AGMEMS software, the Government is entitled to one copy of the executable AGMEMS computer program to run on one defined computer system as well as computer software documentation that the Government may reproduce and distribute to all users. Multiple workstations for associates can be used to access that system limited to underlying license agreements within the associated COTS software and limited by the bounds of performance capability of the system.

The software may be used by any subdivision of the ordering activity (service, bureau, division, command, etc.) that has access to the site the software is placed at, even if the subdivision did not participate in the acquisition of the software. An ordering activity is defined as a cabinet level or independent ordering activity. The user ordering activity will take appropriate action by instruction, agreement, or otherwise, to protect the Contractor's proprietary property with any third parties that are permitted access to the computer programs and documentation in connection with the user ordering activity's permitted use of the computer programs and documentation. For purposes of this section, all such permitted third parties shall be deemed agents of the user ordering activity.

(3) Except as is provided in paragraph 8.b(2) above, the ordering activity shall not provide or otherwise make available the software or documentation, or any portion thereof, in any form, to any third party without the prior written approval of the Contractor. Third parties do not include prime Contractors, subcontractors and agents of the ordering activity who have the ordering activity's permission to use the licensed software and documentation at the facility, and who have agreed to use the licensed software and documentation only in accordance with these restrictions. This provision does not limit the right of the ordering activity to use software, documentation, or information therein, which the ordering activity may already have or obtains without restrictions.

(4) The ordering activity shall have the right to use the computer software and documentation with the computer for which it is acquired at any other facility to which that computer may be transferred, or in cases of disaster recovery, the ordering activity has the right to transfer the software to another site if the ordering activity site for which it is acquired is deemed to be unsafe for ordering activity personnel; to use the computer software and documentation with a backup computer when the primary computer is inoperative; to copy computer programs

for safekeeping (archives) or backup purposes; to transfer a copy of the software to another site for purposes of benchmarking new hardware and/or software; and to modify the software and documentation or combine it with other software, provided that the unmodified portions shall remain subject to these restrictions.

(5) "Commercial Computer Software" may be marked with the Contractor's standard commercial restricted rights legend.

8. Software Conversions - (132-32 AND 132-33)

Full monetary credit will be allowed to the ordering activity when conversion from one version of the software to another is made as the result of a change in operating system initiated by AT&T, or from one computer system to another. Under a perpetual license (132-33), the purchase price of the new software shall be reduced by the amount that was paid to purchase the earlier version. Under a term license (132-32), conversion credits which accrued while the earlier version was under a term license shall carry forward and remain available as conversion credits which may be applied towards the perpetual license price of the new version.

9. DESCRIPTIONS AND EQUIPMENT COMPATIBILITY

The Contractor shall include, in the schedule pricelist, a complete description of each software product and a list of equipment on which the software can be used. Also, included shall be a brief, introductory explanation of the modules and documentation which are offered.

10. Right-to-Copy Pricing

The Contractor shall insert the discounted pricing for right-to-copy licenses 1.

GUARANTEE/WARRANT Y

a. Unless specified otherwise in this contract, the Contractor's standard commercial guarantee/warranty as stated in the contract's commercial pricelist will apply to this contract.

AT&T does not offer a guarantee/warranty in connection with AGMEMS Software, but will replace damaged CDs containing the software at no additional charge.

b. The Contractor warrants and implies that the items delivered hereunder are merchantable.

c. Limitation of Liability. Except as otherwise provided by an express or implied warranty, the Contractor will not be liable to the ordering activity for consequential damages resulting from any defect or deficiencies in accepted items.

Terms And Conditions Applicable to Information Technology (IT) Professional Services (Special Item Number 132-51)
Electronic Commerce (EC) Services (Special Item Number 132-52)

1. Scope

a. The prices, terms and conditions stated under Special Item Number 132-51 Information Technology Professional Services and Special Item Number 132-52 Electronic Commerce Services apply exclusively to IT/EC Services within the scope of this Information Technology Schedule.

b. The Contractor shall provide services at the Contractor's facility and/or at the Government location, as agreed to by the Contractor and the ordering office.

2. Performance Incentives

a. When using a performance based statement of work, performance incentives may be agreed upon between the Contractor and the ordering office on individual fixed price orders or Blanket Purchase Agreements (BPA), for fixed price tasks, under this contract in accordance with this clause.

b. The ordering office must establish a maximum performance incentive price for these services and/or total solutions on individual orders or BPA.

c. To the maximum extent practicable, ordering offices shall consider establishing incentives where performance is critical to the agency's mission and incentives are likely to motivate the contractor. Incentives shall be based on objectively measurable tasks.

d. The above procedures do not apply to Time and Material or labor hour orders.

3. Ordering Procedures For Services (Requiring a Statement of Work)

FAR 8.402 contemplates that GSA may occasionally find it necessary to establish special ordering procedures for individual Federal Supply Schedules or for some Special Item Numbers (SINs) within a Schedule. GSA has established special ordering procedures for services that require a Statement of Work. These special ordering procedures take precedence over the procedures in FAR 8.404 (b)(2) through (b)(3).

GSA has determined that the prices for services contained in the contractor's price list applicable to this Schedule are fair and reasonable. However, the ordering office using this contract is responsible for considering the level of effort and mix of labor proposed to perform a specific task being ordered and for making a determination that the total firm-fixed price or ceiling price

is fair and reasonable.

(a) When ordering services, ordering offices shall—

(1) Prepare a Request (Request for Quote or other communication tool):

(i) A statement of work (a performance-based statement of work is preferred) that outlines, at a minimum, the work to be performed, location of work, period of performance, deliverable schedule, applicable standards, acceptance criteria, and any special requirements (i.e., security clearances, travel, special knowledge, etc.) should be prepared.

(ii) The request should include the statement of work and request the contractors to submit either a firm-fixed price or a ceiling price to provide the services outlined in the statement of work. A firm-fixed price order shall be requested, unless the ordering office makes a determination that it is not possible at the time of placing the order to estimate accurately the extent or duration of the work or to anticipate cost with any reasonable degree of confidence. When such a determination is made, a labor hour or time-and-materials proposal may be requested. The firm-fixed price shall be based on the rates in the schedule contract and shall consider the mix of labor categories and level of effort required to perform the services described in the statement of work. The firm-fixed price of the order should also include any travel costs or other incidental costs related to performance of the services ordered, unless the order provides for reimbursement of travel costs at the rates provided in the Federal Travel or Joint Travel Regulations. A ceiling price must be established for labor-hour and time-and-materials orders.

(iii)The request may ask the contractors, if necessary or appropriate, to submit a project plan for performing the task, and information on the contractor's experience and/or past performance performing similar tasks.

(iv) The request shall notify the contractors what basis will be used for selecting the contractor to receive the order. The notice shall include the basis for determining whether the contractors are technically qualified and provide an explanation regarding the intended use of any experience and/or past performance information in determining technical qualification of responses. If consideration will be limited to schedule contractors who are small business concerns as permitted by paragraph (2)(i) below, the request shall notify the contractors that will be the case.

(2) Transmit the Request to Contractors:

(i) Based upon an initial evaluation of catalogs and price lists, the ordering office should identify the contractors that appear to offer the best value (considering the scope of services offered, pricing and other factors such as contractors' locations, as appropriate). When buying IT professional services under SIN 132—51 ONLY, the ordering office, at its discretion, may limit consideration to those schedule contractors that are small business concerns. This limitation is not applicable when buying supplies and/or services under other SINs as well as SIN 132-51. The limitation may only be used when at least three (3) small businesses

that appear to offer services that will meet the agency's needs are available, if the order is estimated to exceed the micro-purchase threshold.

(ii) The request should be provided to three (3) contractors if the proposed order is estimated to exceed the micro-purchase threshold, but not exceed the maximum order threshold. For proposed orders exceeding the maximum order threshold, the request should be provided to additional contractors that offer services that will meet the agency's needs. Ordering offices should strive to minimize the contractors' costs associated with responding to requests for quotes for specific orders. Requests should be tailored to the minimum level necessary for adequate evaluation and selection for order placement. Oral presentations should be considered, when possible.

(3) Evaluate Responses and Select the Contractor to Receive the Order:

After responses have been evaluated against the factors identified in the request, the order should be placed with the schedule contractor that represents the best value. (See FAR 8.404)

(b) The establishment of Federal Supply Schedule BPAs for recurring services is permitted when the procedures outlined herein are followed. All BPAs for services must define the services that may be ordered under the BPA, along with delivery or performance time frames, billing procedures, etc. The potential volume of orders under BPAs, regardless of the size of individual orders, may offer the ordering office the opportunity to secure volume discounts. When establishing BPAs, ordering offices shall—

(1) Inform contractors in the request (based on the agency's requirement) if a single BPA or multiple BPAs will be established, and indicate the basis that will be used for selecting the contractors to be awarded the BPAs.

(i) SINGLE BPA: Generally, a single BPA should be established when the ordering office can define the tasks to be ordered under the BPA and establish a firm-fixed price or ceiling price for individual tasks or services to be ordered. When this occurs, authorized users may place the order directly under the established BPA when the need for service arises. The schedule contractor that represents the best value should be awarded the BPA. (See FAR 8.404)

(ii) MULTIPLE BPAs: When the ordering office determines multiple BPAs are needed to meet its requirements, the ordering office should determine which contractors can meet any technical qualifications before establishing the BPAs. When multiple BPAs are established, the authorized users must follow the procedures in (a)(2)(ii) above and then place the order with the Schedule contractor that represents the best value.

(2) Review BPAs Periodically: Such reviews shall be conducted at least annually. The purpose of the review is to determine whether the BPA still represents the best value. (See FAR 8.404)

(c) The ordering office should give preference to small business concerns when two or more contractors can provide the services at the same firm-fixed price or ceiling price.

(d) When the ordering office's requirement involves both products as well as executive, administrative and/or professional, services, the ordering office should total the prices for the products and the firm-fixed price for the services and select the contractor that represents the best value. (See FAR 8.404)

The ordering office, at a minimum, should document orders by identifying the contractor from which the services were purchased, the services purchased, and the amount paid. If other than a firm-fixed price order is placed, such documentation should include the basis for the determination to use a labor-hour or time-and-materials order. For agency requirements in excess of the micro-purchase threshold, the order file should document the evaluation of Schedule contractors' quotes that formed the basis for the selection of the contractor that received the order and the rationale for any trade-offs made in making the selection.

Ordering procedures for other services available on schedule at fixed prices for specifically defined services or tasks should use the procedures in FAR 8.404. These procedures are listed in the pricelist, under "Information for Ordering Offices," paragraph #12.

4. Order

a. Agencies may use written orders, EDI orders, BPAs, individual purchase orders, or task orders for ordering services under this contract. BPAs shall not extend beyond the end of the contract period; all services and delivery shall be made and the contract terms and conditions shall continue in effect until the completion of the order. Orders for tasks which extend beyond the fiscal year for which funds are available shall include FAR 52.232-19 Availability of Funds for the Next Fiscal Year. The purchase order shall specify the availability of funds and the period for which funds are available.

b. All task orders are subject to the terms and conditions of the contract. In the event of conflict between a task order and the contract, the contract will take precedence.

5. Performance of Services

a. The Contractor shall commence performance of services on the date agreed to by the Contractor and the ordering office.

b. The Contractor agrees to render services only during normal working hours, unless otherwise agreed to by the Contractor and the ordering office.

c. The Agency should include the criteria for satisfactory completion for each task in the Statement of Work or Delivery Order. Services shall be completed in a good and workmanlike manner.

d. Any Contractor travel required in the performance of IT/EC Services must comply with the Federal Travel Regulation or Joint Travel Regulations, as applicable, in effect on the date(s) the travel is performed. Established Federal Government per diem rates will apply to all Contractor travel. Contractors cannot use GSA city pair contracts.

6. Inspection of Services

The Inspection of Services-Fixed Price (AUG 1996) clause at FAR 52.246-4 applies to firm-fixed price orders placed under this contract. The Inspection-Time-and-Materials and Labor-Hour (JAN 1986) clause at FAR 52.246-6 applies to time-and-materials and labor-hour orders placed under this contract.

7. Responsibilities of the Contractor

The Contractor shall comply with all laws, ordinances, and regulations (Federal, State, City, or otherwise) covering work of this character. If the end product of a task order is software, then FAR 52.227-14 Rights in Data - General, may apply.

8. Responsibilities of the Government

Subject to security regulations, the ordering office shall permit Contractor access to all facilities necessary to perform the requisite IT/EC Services.

9. Independent Contractor

All IT/EC Services performed by the Contractor under the terms of this contract shall be as a independent Contractor, and not as an agent or employee of the Government.

10. Organizational Conflicts of Interest

a. Definitions.

"Contractor" means the person, firm, unincorporated association, joint venture, partnership, or corporation that is a party to this contract.

"Contractor and its affiliates" and "Contractor or its affiliates" refers to the Contractor, its chief executives, directors, officers, subsidiaries, affiliates, subcontractors at any tier, and consultants and any joint venture involving the Contractor, any entity into or with which the Contractor subsequently merges or affiliates, or any other successor or assignee of the Contractor.

An "Organizational conflict of interest" exists when the nature of the work to be performed under a proposed Government contract, without some restriction on activities by the Contractor and its affiliates, may either (i) result in an unfair competitive advantage to the Contractor or its affiliates or (ii) impair the Contractor's or its affiliates' objectivity in performing contract work.

b. To avoid an organizational or financial conflict of interest and to avoid prejudicing the best interests of the Government, ordering offices may place restrictions on the Contractors, its affiliates, chief executives, directors, subsidiaries and subcontractors at any tier when placing orders against schedule contracts. Such restrictions shall be

consistent with FAR 9.505 and shall be designed to avoid, neutralize, or mitigate organizational conflicts of interest that might otherwise exist in situations related to individual orders placed against the schedule contract. Examples of situations, which may require restrictions, are provided at FAR 9.508.

11. Invoices

The Contractor, upon completion of the work ordered, shall submit invoices for IT/EC services. Progress payments may be authorized by the ordering office on individual orders if appropriate. Progress payments shall be based upon completion of defined milestones or interim products. Invoices shall be submitted monthly for recurring services performed during the preceding month.

12. Payments

For firm-fixed price orders the Government shall pay the Contractor, upon submission of proper invoices or vouchers, the prices stipulated in this contract for service rendered and accepted. Progress payments shall be made only when authorized by the order. For time-and-materials orders, the Payments under Time-and-Materials and Labor-Hour Contracts (Alternate I (APR1984)) at FAR 52.232-7 applies to time-and-materials orders placed under this contract. For labor-hour orders, the Payment under Time-and-Materials and Labor-Hour Contracts (FEB 2002) (Alternate II (FEB 2002)) at FAR 52.232-7 applies to labor-hour orders placed under this contract.

13. Résumés

Résumés shall be provided to the GSA Contracting Officer or the user agency upon request.

14. Incidental Support Costs

Incidental support costs are available outside the scope of this contract. The costs will be negotiated separately with the ordering agency in accordance with the guidelines set forth in the FAR.

15. Approval Of Subcontracts

The ordering activity may require that the Contractor receive, from the ordering activity's Contracting Officer, written consent before placing any subcontract for furnishing any of the work called for in a task order.

AT&T Managed Internet Service

Service Description

1 AT&T Internet Service

1.1 AT&T Managed Internet Services (MIS)

1.1.1 Service Description

Overview

AT&T Managed Internet Service (MIS) is a comprehensive, managed Internet access solution available to the Government. The service offers the Government flexible solutions to their Internet access requirements by providing a wide range of service offers, access methods, and transmission speeds. The service can be managed entirely by AT&T or, if desired, partially by AT&T and partially by the Government.

1.1.2 Features of AT&T MIS Include

- End-to-end managed Internet connectivity for improved performance and engineering
- Based on AT&T's Internet Protocol (IP) backbone and core network, the most reliable in the world
- World-class technical support
- Proactive network monitoring twenty-four hours a day, seven days a week (24x7)
- Enhanced security services for greater protection
- Integration with existing private line and Frame Relay access
- Flexible solutions to suit customers' unique requirements
- Around-the-clock access to the Internet and its vast information sources
- Ability to conduct transactions electronically
- Enterprise-wide inter-networked communications via electronic mail - not with MIS yet
- Electronic distribution of corporate material via electronic mail and World Wide Web servers
- One-stop shopping for Internet access, and hosting
- Availability of compatible Internet offerings from AT&T such as AT&T Easy World Wide Web Service and AT&T Enhanced Web Development Package.

1.1.3 Service Offers

AT&T MIS provides two types of packaged offers to the Government: **Basic (Dedicated) Service** and **Plus (Managed) Service.** The two offers are designed to meet preferences for having the service managed entirely by AT&T (Plus [Managed] Service) or managed partially in-

house (Basic [Dedicated] Service). Each package contains a variety of components that a customer may or may not wish to utilize. Please review the "Service Features" section for complete descriptions of each component and the "Service Options" section for information on additional components that may be added to each package for additional fees.

Basic (Dedicated) Service Offer. The Basic (Dedicated) Service offer is designed for customers who prefer to manage several elements of the service in-house. The typical Basic (Dedicated) Service customer has a large in-house IP network operation and considerable expertise, and prefers to retain control of the premises equipment. With Basic (Dedicated) Service, the customer is responsible for providing, configuring, installing, maintaining, and managing the premises equipment (including passwords). AT&T does not provide Customer Premises Equipment (CPE) management for any Basic Service customer. The point of demarcation between the customer's responsibility and AT&T MIS is the termination of the access line at the customer premises. Basic Service includes the Access Port, Primary and Secondary Domain Name System (DNS) Administration, Network Newsfeed, and Network Usage Reports. Please review the "Customer Access" section for service speed availability and access type.

Plus (Managed) Service Offer. The Plus (Managed) Service offer provides managed "end-to-end" connectivity to the Internet with features and support designed for customers who prefer complete vendor-provided solutions for their designated connectivity needs. The Plus (Managed) Service customer will be provided with the premises equipment (lease only: includes router, Channel Service Unit/Digital Service Unit (CSU/DSU) and diagnostic modem). The customer assigns full management and operational control of the premises equipment (including passwords) to AT&T. An external diagnostic modem is supplied by AT&T for out-of-band provisioning and maintenance of the CPE. The customer is required to supply a dedicated Plain Old Telephone Service (POTS) line for the modem. The point of demarcation between the customer's responsibility and AT&T MIS is at the Local Area Network (LAN) port of the router. Plus Service includes the Access Port, CPE Lease and Management, Packet Filtering, Primary and Secondary DNS Administration, Network Newsfeed, and Network Usage Reports. Please review the "Customer Access" section for service speed availability and access type. This offer gives the customer the full benefits of end-to-end managed connectivity to the Internet.

The following billing and access options are offered as part of AT&T MIS:

Private Line. Speeds of OC-3 (155 MB) and OC-12 (622 MB) are proposed to be added to the current offer. These speeds are provided where available. Customers requesting these speeds must have their locations pre-qualified for the speeds by their AT&T Sales Representative.

Burstable Billing. Customers may elect Flat Rate or usage-based billing. Burstable Billing is once choice for usage-based billing. It is available via Private Line access Line (T1, T3, OC-3, and OC-12, where available). It is not available with MIS NxT1 Access. Burstable Billing is appropriate for customers who have a need for temporary increases in bandwidth requirements for higher performance applications and are looking for flexible billing options. Customers are provisioned with full T1, T3, OC-3 or OC-12 MIS Port and are able to utilize up to the full capacity of the transmission facility when additional bandwidth is needed. The Burstable Service price plan ensures that customers pay for sustained bandwidth usage only (rather than the full line rate) for a cost-effective

alternative to leasing and paying for the *entire* dedicated T1, T3, OC-3, or OC-12 MIS Port, regardless of actual usage. The pricing for Burstable billing is based upon "Sustained" bandwidth usage (which is determined on a monthly basis). The methodology for measuring "Sustained" usage is as follows:

- The Access Router is polled every 5 minutes for total octets in and total octets out. The data is divided by 300 (the number of seconds in a 5 minute interval). This gives two averages (one in, one out) for the 5-minute period.
- The averages become data points, which are tracked over the course of the customer's monthly billing cycle.
- The top 5 percent of the data points are disregarded and the customer is billed at the 95 percent level of usage.

Hi Cap Flex Billing Option. MIS Hi Cap Flex Billing is another MIS billing option that is based upon sustained usage. As with Burstable Billing, customers are provisioned with a full dedicated access circuit, but only pay for actual sustained bandwidth usage—not the full line rate. It is different from the Burstable Billing option in that customers select a minimum monthly bandwidth commitment and then pay an additional fee for sustained usage about the minimum commitment (Burstable Billing does not require a minimum bandwidth commitment). MIS Hi Cap Flex Billing customers can "burst" up to the full capacity of the pipe when needed. MIS Hi Cap Flex Billing is available with Private Line (T3, OC-3 and OC-12, where available). It is not available with MIS NxT1 Access. The methodology for measuring "Sustained" Usage is the same as the methodology used for Burstable Billing (noted above).

NxT1 **Access.** NxT1 Access is provided through a combination of software and hardware components, which provide customers with greater bandwidth by automatically load balancing traffic over multiple T1 links. Packets are interleaved across multiple T1s, effectively performing as a single larger circuit. NxT1 optimizes network performance and scalability for networks with large and dynamic traffic patterns such as the Internet or on networks characterized by intensive web-based applications or interactive sessions. NxT1 Access is available for 2 to 4 T1s of capacity (3 Mbps, 4.5 Mbps and 6 Mbps). This offer is appropriate for customers seeking greater bandwidth without the need to purchase local T3 facilities.

Through the use of per-packet load balancing on the combined circuits, the total combined bandwidth of the multiple circuits can be fully realized. With NxT1 Access, customers will experience graceful service degradation if one T1 fails, as the other T1(s) will continue to function normally. AT&T will manage inbound (Network to Customer) and outbound (Customer to Network) load balancing for all MIS customers that lease their CPE from AT&T. For AT&T MIS customers that elect to provide and manage their own CPE, AT&T will provision inbound load balancing. Outbound load balancing can be achieved using either per-packet or per-destination at the customer's discretion. NxT1 Access is not available with the MIS Burstable billing option.

Service Activation Fee: Includes technical interview, access line coordination, DNS registration, service testing, and equipment configuration (MIS with Managed Router

only). In addition, working with the customer, the Network Operations Center (NOC) will conduct "cooperative testing" of the customer's site to ensure that the customer's on-site router can successfully communicate over AT&T MIS. The cooperative test verifies the proper operation of the on-site equipment, the local access facility, and the access infrastructure. Service Activation does not include inside wiring.

MIS with Managed Router customers have the option of Tele-installation or On-site installation (except for speeds of T3 and above where only on-site installation is available). If the customer selects tele-installation, the customer is responsible for unpacking and connecting the CPE, with telephone assistance from AT&T if required. With on-site installation, an authorized AT&T Service Technician will unpack, connect, and test the CPE and completes the cooperative testing with the NOC.

1.1.3 Service Features

The Basic (Dedicated) Service Offer includes the following features:

Domain Name System (DNS) Administration. DNS is required for dedicated Internet access. All AT&T MIS Packages include up to 15 Primary DNS zones or up to 150 Kilobytes per second (kbps) of Primary zone data AND up to 15 Secondary DNS zones or up to 150 Kilobytes of Secondary zone data. At the customer's request, AT&T engineers may make changes to the customer's DNS records. Customers may choose to administer their own Primary DNS in which case AT&T will provide/administer Secondary DNS only, if requested. It is suggested that customers limit their requests for DNS changes to one occurrence per week. All DNS change requests must be made during normal business hours. Additional DNS may be purchased as defined in the "Additional DNS Option".

Network News Feed Service. This feature provides comprehensive or selective access to the Net News and Usenet news groups. Customers utilizing this feature can specify which of the thousands of news groups to receive and which ones to filter. This feature requires the customer to purchase, correctly configure, install, and manage a news server to which the AT&T MIS central news server feeds the customer-specified news using the Network News Transfer Protocol (NNTP). News downloaded to the customer's news server is available to all authorized users on the customer's network. AT&T does not automatically censor or screen objectionable or unwanted news, nor does it limit the number of news feeds requested by the customer. AT&T will add or delete news feeds at the customer's request during normal business hours. The central news server is monitored by AT&T around the clock.

Network Usage Reports. This component provides AT&T MIS customers with real-time, on-line access to traffic summary reports which track access line utilization and peak activity periods. Customers can display their AT&T MIS usage in both graphical and tabular formats. Graphical reports are available on a daily, weekly, or monthly basis. In addition, they can view separate statistics for each of their MIS circuits and separate traffic profiles for inbound vs outbound traffic. Tabular reports are available on a daily or weekly basis. Customers can down load the data and import to their *Microsoft EXCEL* spreadsheet. Usage reports detail network utilization as a percentage of available

bandwidth throughout the week based on information collected from the customer's premises equipment using the Simple Network Management Protocol (SNMP) tools. This comprehensive view of usage data provides customers with a valuable tool to more-effectively monitor and manage their Internet bandwidth utilization and plan for future upgrades. Network Usage Reports are available 24 hours a day, seven days a week (except during maintenance). Access to Network Usage Reports is through a Web site with security features. Secure Socket Layer (SSL) technology is used to protect the customer's data from unauthorized users. All of the customer data is password protected.

The Plus (Managed) Service includes all of the features described above and the following:

Customer Premises Equipment Lease. Customers will be provided with pre-configured customer premises equipment from AT&T. Equipment includes a *Cisco* router, *Digital Link* or *Cray* CSU/DSU, and a *US Robotics* diagnostics modem for out-of-band testing. For private line customers, additional equipment provided includes a loopback connector, transceiver (Application User Interface [AUI] or 10BASE-T and 10BASE-2 types), and associated cables. If the customer requires a different type of transceiver, the customer supplies it. Integrated access customers must provide and manage a T1.5 multiplexer or a CSU/DSU with drop-and-insert capability. All customers are required to supply a dedicated POTS line to be used only for out-of-band testing. All customer premises equipment supplied by AT&T under this feature is pre-configured by AT&T and includes Advanced Replacement Next Business Day (ARNBD) support. All equipment is owned by AT&T, can be used for this service only, and must be returned at termination of the service.

Customer Premises Equipment Monitoring, Maintenance, and Management. AT&T's technical staff is responsible for maintaining dedicated premises equipment for Plus (Managed) Service customers. Technicians work with the customer's designated point-of-contact to diagnose failures, should they occur, and to determine if equipment should be replaced or repaired. Equipment repair, if required, is performed by the customer's central point of contact with telephone assistance, if needed, from the AT&T NOC. If replacement is required, equipment is replaced by the next business day.

Packet Filtering. AT&T will oversee implementation and maintenance of packet filtering tables in the customer's router for added security. Packet filtering is a useful component of a comprehensive security plan. It can help prevent unauthorized access to the customer's internal network, and it can control authorized users' access to customer-specified Internet sites. AT&T engineers will work with the customer to define a customized filtering plan and, at the customer's request, make changes to the plan. Changes are limited to an average of one request per week, and must be made during normal business hours.

1.1.3.1 Service Options

AT&T MIS customers may purchase the following options. Most require additional fees. Please note that not all options are available with all Service Offers:

Additional Primary or Secondary DNS. The optional administration of additional Primary or Secondary DNS. This option supports administration of up to 15 DNS zones or 150 Kbps of zone file data. Customers may select Primary DNS or Secondary DNS. Multiple orders of Additional DNS, for the corresponding monthly charge, are available. This option is available for an additional fee with Basic and Plus Service.

Outbound Mail Relay Service. Provides an AT&T hosted and managed SMTP Internet mail relay server dedicated to routing outgoing (from the customer's site) email for customers with SMTP gateways, or for customers who do not want to manage a mail relay server on their network. The mail relay server receives outbound email from a customer's network and relays it to Internet mail recipients. If the Internet destination is unreachable the mail relay server will temporarily store the email and attempt to deliver (store and forward) until the destination becomes reachable, or until the mail process times out. There is no inbound mail relay service with this option. This option is available with Basic (Dedicated) and Plus (Managed) Service.

1.1.4 Benefits of AT&T Managed Internet Service

AT&T MIS offers the government many advantages, including the following:

- Flexible solutions. AT&T MIS gives the customer a choice of access methods, access speed, and service features, as well as service offers, all designed to meet the governments specific Internet requirements.
- Managed connection to the Internet. With AT&T MIS, the Government's Internet connection can be managed entirely by AT&T (Plus [Managed] Service) for maximum performance and superior engineering. The customer can also opt to share the management of the Internet connection with AT&T (Basic [Dedicated] Service offer), if desired.
- Ease of Implementation. AT&T can implement the Government's entire Internet or Intranet solution, from site planning to acceptance testing.
- World-class customer support. AT&T MIS includes AT&T's unsurpassed technical expertise and proactive around-the-clock network monitoring.
- Enhanced security. AT&T MIS offers a number of features and options designed to ensure the highest possible levels of security for the customer's Internet connection.
- Convenient one-stop-shopping. AT&T offers the Government the unique advantage of a single-vendor relationship for their entire Internet needs.
- Maximum reliability. AT&T's network reliability is rated highest in the industry, with a maximum of 3 percent packet loss during peak hour with minimal interruption. A loss of greater than 1 percent average packet loss would cause alarms in the AT&T NOC, while a number of competitors typically tolerate losses in the 3-5 percent range.
- AT&T Internet Service Level guarantee.
- Extensive high-speed connections. AT&T has access available at more than 580 Points of Presence (POPs) in the United States for virtually ubiquitous local access.

- Unsurpassed expertise. Government MIS customers can enjoy the strategic advantage of AT&T's experience and infrastructure as the cornerstone of their Internet solutions.

1.2 AT&T Managed Internet Service: Service and Maintenance

1.2.1 Customer Access

Government access to AT&T MIS is provided through the AT&T Private Line family of services at speeds ranging from 56 Kbps to OC-48. Access coordination is supported with integrated access, which allows these circuits to be shared with other AT&T services.

Static Integrated Network Access (SINA) is supported with circuit speeds of 64 Kbps, 128 Kbps, 256 Kbps, 384 Kbps, 512 Kbps, 768 Kbps, and 1.5 Mbps.

AT&T MIS provides access service points at 580 *ACCUNET* POPs in the continental United States (CONUS). AT&T personnel will coordinate the provisioning of the access circuit for the customer's MIS. An Agency Agreement with the customer is required for dedicated access circuits. Local access charges are not included in the AT&T Internet Services MIS pricing. Government customers are typically billed separately for the "local access".

1.2.2 Implementation Support

AT&T MIS includes a robust suite of implementation support services each briefly described below. They are:

Site Planning and Preparation. AT&T helps Government customers prepare for installation of MIS by providing site information to the customer's designated point of contact and by registering the customer's network numbers, domain names, and routing information. Customers must provide space and power for the dedicated router and other premises equipment, an attachment to the customer's internal network, at least one computer with Transmission Control Protocol/Internet Protocol (TCP/IP) support, and a dedicated POTS line for the out-of-band diagnostic modem. This support service is included with Plus (Managed) Service only.

Access Circuit Provisioning. AT&T will order and install, on the Government's behalf, the AT&T Private Line circuit necessary for delivery of MIS. AT&T will arrange for termination of the circuit in proximity to the planned location of the premises equipment. Any inside wiring changes that may be needed are the responsibility of the Government. This support service is included with Basic (Dedicated) Service and Plus (Managed) Service.

Cooperative Testing. The AT&T NOC will conduct cooperative testing of the Government's site to ensure that the on-site router can successfully communicate over

AT&T MIS. The cooperative test verifies the proper operation of the on-site equipment, the local access facility, and the AT&T access infrastructure. AT&T MIS turns up the service for billing after AT&T has completed their processes for service provisioning,

regardless of a customer's state of readiness. These provisioning processes include: 1) Local access circuit ordering, 2) Inter-Office Connectivity (IOC) provisioning to AT&T backbone node, 3) Backbone router provisioning, 4) DNS and feature provisioning, 5) Testing of end to end connectivity into the Internet. This support service is included with Basic (Dedicated) Service and Plus (Managed) Service.

1.2.3 Network Operations Services

AT&T MIS is operated through the AT&T NOC. At the NOC, the AT&T MIS technical support staff provides valuable network operations services, each described briefly below.

The technical support staff at the NOC is dedicated to providing the highest possible network availability and performance for AT&T MIS. The service is monitored by experienced network operators and technicians 24x7. The NOC provides proactive operations support and troubleshooting for the network and the service infrastructure.

AT&T MIS covers a wide geographic area with a variety of technologies. To ensure maximum network performance, the NOC coordinates its operations with Government-assigned central points of contact, hardware vendors, and operators of other networks.

The specific network operations services included with AT&T MIS are:

Network Monitoring. AT&T MIS is assured the highest network performance through careful IP network management and the industry-acclaimed performance of the AT&T network. The IP network is monitored by the NOC using SNMP-based software. The software is used in combination with other essential tools to monitor non-SNMP equipment, domain name servers, NNTP news feeds, and other network services. The status of the network is continually reported to a display that is monitored around the clock. All changes in the IP network status are logged, giving the NOC the ability to evaluate staff responsiveness and network availability. In addition to the IP network, the underlying transport network is monitored by AT&T Transport Centers 24x7. This network operations service is included with Basic (Dedicated) Service and Plus (Managed) Service.

Premises Equipment Monitoring, Maintenance, and Management. AT&T MIS technical staff is responsible for maintaining Plus (Managed) Service customers' dedicated premises equipment. Technicians work with the Government's designated point-of-contact to diagnose failures, should they occur, and to determine if equipment should be replaced or repaired. Equipment repair, if required, is performed by the Government's central point of contact with telephone assistance, if needed, from the AT&T NOC. If replacement is required, equipment is replaced by next business day. This network operation service is included with Plus (Managed) Service only.

1.2.4 Technical Services and Support

AT&T MIS includes all of the technical support services essential for optimal use of the service. The technical support services, each described briefly below, are:

Software and Configuration Support. For Plus (Managed) Service customers, the AT&T MIS Technical Staff coordinates software updates and configuration changes as required for the router and CSU/DSU. Notice of software changes is made to the customer central point of contact, and every effort is made to perform maintenance during off-hours. This technical support service is included with Plus (Managed) Service only.

Twenty-four Hour Hotline. The AT&T MIS hotline is staffed around the clock. All calls to the hotline are directed to the appropriate technician through a touch-tone menu system. This technical support service is included with Basic (Dedicated) Service and Plus (Managed) Service.

Trouble Ticket System. With the support of the AT&T NOC, the AT&T Customer Care organization tracks all problems from initial report to satisfactory resolution through the AT&T Network Operations Trouble Ticket System. While the technical staff is resolving any given problem, its current status is reflected in the Trouble Ticket System. The system's electronic mail and fax interfaces facilitate the electronic distribution of trouble ticket reports to the customer's technical contact, if needed. This technical support service is included with Basic (Dedicated) Service and Plus (Managed) Service.

Fault Isolation and Problem Resolution. Fault isolation involves coordination among network operators and technicians, staff at the affected site, and other vendors. Depending on the specific technologies used, the process may involve testing equipment, reconfiguring routers, or diagnosing communication link problems. This technical support service is included with Basic (Dedicated) Service and Plus (Managed) Service.

Security Procedures. Security procedures for AT&T MIS help keep customers informed of known and suspected security breaches. Information about security problems is reviewed regularly and distributed to customer sites, as deemed necessary. Plus (Managed) Service customers may designate several contacts that will be authorized to request site disconnection or reconnection as necessary. This technical support service is included with Basic (Dedicated) Service and Plus (Managed) Service.

1.2.5 The AT&T IP Backbone

AT&T MIS is based on AT&T's IP backbone and the AT&T core network, the most reliable network in the world. The IP backbone has been designed and engineered with the express purpose of attaining the highest possible levels of reliability and performance. It offers AT&T MIS customers a number of built-in features for exceptional or incomparable advantages, including:

Industry-Leading Reliability. Target availability for the AT&T IP backbone is an industry leading 99.9 percent. This is achieved by making optimal use of the best techniques for security, problem detection and prevention, redundancy, and restoration. The backbone network is designed with no single point of failure in the core architecture. All backbone nodes are located in secured AT&T central offices. The network is a mixture of Digital Signal 3s (DS-3s) and Optical Carrier Level 3s (OC-3s), and will consist of an OC-48 core network along with regional OC-12 and OC-3 networks by the

end of 1999. All of the backbone's DS-3s are protected by Fast Automatic Restoration *(FASTAR),* AT&T's proprietary restoration system. Facilities are meshed to provide alternate routes between nodes: backbone routers are installed in pairs and routers are implemented in redundant configurations.

Outstanding Performance. The AT&T IP backbone has been designed and engineered to achieve the highest possible performance. Because it was built "from scratch", rather than retro-fitted from some other application, the AT&T IP backbone has been able to enjoy the results of careful consideration of a number of important factors, such as high performance and low packet loss. Built with industry-leading high-performance network hardware and software, it contains no more than four facility hops across the backbone. Its cross-country backbone delay target is 80 millisecond and packet loss is less than 1 percent.

Superior Security. The backbone includes IP source address filtering on routers at all customer connections to prevent intrusions by hackers. Any packet attempting to enter the AT&T IP backbone which does not have a "known" source address will be discarded. This security measure is recommended by the Carnegie-Mellon University Computer Emergency Response Team as a first line of defense against hackers. Other security measures include protecting a portion of the AT&T Class A address space from forgery (spoof proofing) on inbound connections from the public Internet.

Maximum Control. The IP backbone is monitored and maintained through AT&T's state-of-the-art NOC. Out-of-band and in-band network monitoring systems are used, providing real-time status of all network elements at all times. A comprehensive testbed network environment is available for controlled introduction of new features and capabilities to maximize network performance and reliability even as the backbone is being upgraded. Because AT&T manages the capacity of the network carefully, we are continually augmenting the network with facilities to ensure excellent performance.

AT&T's Internet backbone was ranked among the top-performing backbones by the first independent ranking of Internet backbones. Using actual performance measurements by a third party, the recently published Keynote/Boardwatch Internet Backbone Index shows AT&T's backbone performing at least twice as fast as the average backbone.

1.2.6 AT&T Internet Service Level Guarantee

Under the AT&T Internet Service Level limited guarantee program, AT&T MIS customers provisioned on the AT&T IP Backbone are provided a guarantee of network availability, subject to program rules and regulations. If a customer experiences a network outage of ten (10) minutes or more in any calendar day, or if AT&T experiences in any calendar month a network-wide delay of greater than 80 milliseconds or a network-wide packet loss of 1 percent or more, the customer will be eligible for a credit of one day's worth ($1/30^{th}$) of the customer's total monthly connection charge for that Covered Service for each such incident, subject to the maximums specified below. In addition, AT&T Internet Services MIS Plus (Managed) customers are extended the same ten (10) minute limited guarantee and will receive the same credit for service outage to the CPE and to the dedicated access facility from their premises to the AT&T POP.

In any calendar month, a customer's credits with respect to any particular site for an outage may not exceed five (5) outage incidents. In any calendar year, a customer's aggregated credits may not exceed one (1) month's connection.

1.2.7 AT&T IP Network Performance Web Site

Through AT&T's external Web site, customers are provided with real time access to network performance information. The site provides performance measurements on availability, latency/delay, and packet loss (updated every thirty minutes) - the three performance areas covered by the AT&T Service Level Guarantee. The IP Network Performance Site is accessible from a link on the AT&T IP Services Web site: http://www.att.com/ipservices.

1.3 AT&T Internet Services Managed Internet Service CPE Specifications & Policy

1.3.1 Introduction

The AT&T Internet Services MIS provides dedicated access to the Internet. This service requires the use of a CSU/DSU and a router for both Basic (Dedicated) or Plus (Managed) Service. Under the Basic (Dedicated) Service, the Government Customer must supply all customer premises equipment for use with the service. Under Plus (Managed) Service the customer will lease a CSU/DSU and router through AT&T Internet Services MIS.

If a customer's future requirements dictate the need for SINA or the use of multiple data applications over a single CSU/DSU, it may be in the customer's best interest to provision their own CSU/DSU with the capabilities required for future use.

1.3.2 Basic (Dedicated) Service

Overview: AT&T MIS provides dedicated access to the Internet. This service requires the use of a CSU/DSU and a router. Under the Basic (Dedicated) Service, the customer must provide, configure, install, maintain, and manage all CPE for use with AT&T MIS. AT&T does not provide CPE management for any Basic (Dedicated) Service customer.

The information contained in this document identifies the CPE specifications that must be adhered to by all Customers supplying CPE under the Basic (Dedicated) option.

1.3.2.1 Router Specifications for MIS Basic (Dedicated) Service

AT&T MIS Basic (Dedicated) customer routers must support the following:

- PPP for leased line protocol *(Cisco* HDLC protocol is not supported)
- RFC 2427- Multiprotocol Interconnect for Frame Relay protocol
- IP Default and Static routing

- A serial link (point-to-point) connection to AT&T Internet Services.

1.3.2.2 Router Configurations for MIS Basic (Dedicated) Service

AT&T MIS Basic (Dedicated) customers are required to configure their router so that it can:

- Receive Internet Control Message Protocol (ICMP) pings from the AT&T Internet Services NOC.
- Advertise the customer's internal/private network by using Border Gateway Protocol 4 (BGP4) or Routing Information Protocol 2 (RIP2) (but RIP2 is not recommended), if the customer cloud requires dynamic routing.
- Learn a default or limited set of routes by using BGP4 or RIP2 (but RIP2 is not recommended), if the site requires dynamic routing.
- Provide adequate memory (at least 64 MB) when BGP4 routing is required.

AT&T MIS encourages Basic (Dedicated) customers to purchase the most recent revision of a vendors router software such as the 11.x Internetworking Operating System (IOS) for *Cisco* in order to maintain maximum compatibility with this service. **This IOS must be tested and Year 2000 (Y2K) compliant.**

1.3.3 CSU/DSU Specifications for MIS Basic (Dedicated)Service

AT&T MIS Basic (Dedicated) customers must supply a CSU/DSU that is compatible with the AT&T network. All CSU/DSUs must meet the configuration and access protocol requirements below. Currently, the only CSU/DSU uniquely specified is for T3 applications requiring private line transport to the AT&T common backbone.

Line Speed	*CSU/DSU*
T3	Larscom Access T45

1.3.3.1 CSU/DSU Configurations for Basic (Dedicated) Service

AT&T MIS Basic (Dedicated) customers are required to configure their own CSU/DSUs and must meet the Network Interface (NI) protocol requirements specified under Access Protocols below. In general, the CSU/DSUs must be configured for one or more of the following framing and signaling parameters, depending on the access speed:

- Binary Eight Zero Substitution (B8ZS) and Extended Super Frame (ESF)
- The line build out must be able to adapt to different voltage levels from smart jacks
- Take timing from the AT&T network (loop timed or receive timed)
- Support contiguous time slots for Fractional T-Carrier DS1 (FT1).

1.3.4 Access Protocols

The physical level access CPE (the CSU/DSUs) connecting to the AT&T Basic (Dedicated) Service must meet the Network Interface (NI) specifications in the following AT&T references:

- **For Private Line access:** The data link protocol must be the Point-to-Point Protocol (PPP). The CSU/DSU must meet one or more of the following reference, depending on the access speed:
- AT&T Technical Reference 62310 "DS-0 Digital Local Channel Description and Interface Specification", August 1993.
- AT&T Technical Reference 62421 *"ACCUNET* Spectrum of Digital Services", December 1989, and Addendum 2, November 1992.
- AT&T Technical Reference 62411 *"ACCUNET T1.5* Service Description and Interface Specification", December 1990, Addendum 1, March 1991, and Addendum 2, October 1992.
- AT&T Technical Reference 62415 "Access Specification for High Capacity (DS-1/DS-3) Dedicated Digital Services", June 1989, Addendum 2, November 1990, and Addendum 3, July 1992.
- AT&T Technical Reference 54014 *"ACCUNET* T3 and T45R Service Description and Interface Specification", May 1992.
- AT&T Technical Reference 54016 "Requirements for Interfacing Digital Terminal Equipment to Services Employing the Extended Super-frame Format", September 1989 or ANSI T1.403 "Carrier to Customer Installation - DS1 Metallic Interface".

AT&T Dedicated Hosting Services
Managed Service
Service Description

2 AT&T Dedicated Hosting Services - Managed Service

2.1 Service Description

AT&T Dedicated Hosting Services offers customers the highest level of reliability, availability, scalability, and performance needed to fulfill their web hosting requirements. AT&T does this with a combination of advanced hardware and software products, state-of-the-art facilities, and a highly skilled technical and operational staff.

Capabilities: AT&T Dedicated Hosting Services - Managed Service is defined as a collection of the following capabilities:

Facilities	Customer selects location(s) of servers based on availability.

Connectivity	Dedicated Ethernet is available for front-end connectivity based on Committed Information Rate (CIR). Back-end connectivity is the customer's responsibility and may be separately ordered from AT&T and an authorized local access vendor.
Hardware	Multi-server configuration.
Software	Pre-built application.
Maintenance & Administration	AT&T Managed.
Services	A full line of services is available.

2.2 Hardware

Hardware with the features specified below is offered for purchase under the NT Managed Bundle Service:

Eight Servers with the following characteristics:

- Intel Pentium III processor 733 MHz or 667 MHz with 256K cache (dual processor capability)
- 128 MB (expandable to 4GB) of 133MHz ECC Registered SDRAM DIMM
- Integrated Smart Array Controller provides RAID capability without using a PCI slot
- 4 x 1" Wide Ultra2/Ultra3 hot plug SCSI hard drives bays (up to 6 x 1" drives with options 2 x 1" drive cage option)
- Removable media bay supporting 2 half height or 1 full height device or optional 2 x 1" hot plug drive cage

- 4 - PCI slots, three 64-bit, one 32-bit, all running at 33 MHz
- 109.2 GB maximum internal storage
- Hot Plug Redundant Power Supply.

Two servers with the following characteristics:

- Intel Pentium III Xeon 700 MHz processor with 100 Mhz front-side bus & full speed cache (quad processor capability)
- Dual Peer PCI Architecture (no need to balance I/O)
- ECC-protected memory bus and cache
- ECC EDO memory, expandable up to 4GB
- Seven expansion slots (6 PCI and 1 shared PCI/ISA)
- UTP Controller
- 64-bit Dual Channel Wide Ultra2 SCSI Adapter operating at 32-bit speeds (Wide Ultra2 Models only)

- Internal hot plug capacity up to 182GB (w/Ultra2 Models) or 218.4GB (w/Ultra SCSI-3 Models)
- Standard Wide Ultra2 SCSI drive cage (simplex) supports ten 1" Wide Ultra2 hard drives
- Support for optional Wide-Ultra SCSI-3 drive cage
- Automatic Server Recovery-2
- Hardware provided under this offer includes a three-year, on-site limited warranty and extended Pre-Failure Warranty, which covers Intel Pentium processors, memory and disk drives.

Note: AT&T, depending on availability and technological advancements, may substitute equivalent servers.

One Fibre Channel Disk Array with the following characteristics:

- 6 18.2 GB 10000 rpm hard dives and a RAID 5 configuration
- Redundant RAID controller
- 7 port fibre hub with rack mount kit
- 2 PCI to fibre host adapters.

One Fibre Channel Disk Array with the following characteristics:

- 6 18.2 GB 10000 rpm hard dives and a RAID 5 configuration
- Redundant RAID controller
- 7 port fibre hub with rack mount kit
- 5 PCI to fibre host adapters.

Hardware with the features specified below is offered for purchase under the Enhanced NT Managed Service Bundle:

Two Web Servers with the following characteristics:

- Dual Pentium Xeon 3.06 Ghz
- 1 GB of RAM
- 2-36GB Drives

Two Web Database Servers with the following characteristics:

- Dual Pentium Xeon 2.8 Ghz
- 2GB of RAM
- 2-36GB Drives

Two Database Servers with the following characteristics:

- Quad MP 2.0 Ghz
- 4-GB of RAM
- 2-36GB Drives

Two Work Servers with the following characteristics:

- Dual Pentium Xeon 3.06 Ghz
- 2-GBofRAM
- 2 72.8GB Drives

Two Servers with the following characteristics:

- Dual Pentium Xeon 2.8 Ghz
- 2-GB of RAM
- 2-36GB Drives

Six Servers with the following characteristics:

- Dual Pentium Xeon 3.06 Ghz
- 4-GBofRAM
- ■ 2- 146GB Drives

One Storage Area Network (SAN) with the following characteristics:

- SAN Array 1000
- 14-146 GB Drives
- Two Keyboard-Video-Mouse (KVM)s

2.3 Software

The following software is preinstalled on the hardware provided as part of the NT Managed Service Bundle:

Software Services	*NT Option*
Included	Windows NT 4.0 w/sp4
	MS - IIS 4.0 PC
	Anywhere 8.0 PERL

AT&T does not provide technical product support in the use of any software, whether itis provided by AT&T or not.

Customers who provide their own servers must also license *all* software for use on those servers. Customers who provide software do so under the following terms:

- Customer is responsible for proper licensing and registration.
- Customer must indemnify AT&T against any damages or costs AT&T might incur for allowing use of software on servers that AT&T provides or hosts.
- Customer must maintain current maintenance and support contracts for the software.
- Customer must identify AT&T as an authorized contact for maintenance and support.

Installation, upgrade and other maintenance of any customer provided software is not included in this offer.

The following software is pre-installed on the hardware provided as part of the Enhanced NT Managed Service Bundle:

Software Services	*2003 Option*
Included	Windows 2003 ServerWeb Standar Enterprise Microsoft SQL Server

2.4 Options/Features

2.4.1 Bandwidth

Front-End Connectivity provides a burstable WAN access method allowing customers to exceed their Minimum CIR to the capacity allowed by the network access method. This access method is burstable from the base rate in full 1.0 Mbps increments based on the 95th percentile charging method. This provides the customer the bandwidth to meet peak needs.

Table 2.4.1-1 Front-End Connectivity Options

Network Access Method	*Minimum Customer Commitment (Mbps)*
Ethernet - Burstable to 10 Mbps	1

The following bandwidth is provided as part of the Enhanced NT Managed Service Bundle:

Network Access Method	*Minimum Customer Commitment (Mbps)*
Ethernet - Burstable to 10 Mbps	3

2.4.2 Management Services

Management of servers includes two primary components: Operating System and Hardware. In a managed scenario, AT&T assumes responsibility for the reliability of the hardware and for the stability of the operating system residing on the server. AT&T site operations are designed to provide continuous service even in the event of hardware and/or network failure. Spare parts are inventoried at

AT&T Internet Data Centers (IDC). AT&T IDC operators and NOC agents are trained in the administration, maintenance and repair of supported server hardware, ensuring that action can be taken without delay around the clock. AT&T's goal is to ensure that, on average, no

AT&T customer or backbone site is without AT&T service for more than 4 hours per month. This translates to a monthly uptime of 99.45 percent. This goal *includes* downtime resulting from scheduled and unscheduled maintenance activities and hardware, software and telecommunications failures. Scheduled maintenance activities are conducted during off-peak hours with 2 weeks notice. In the event that emergency unscheduled maintenance activities are required, AT&T follows pre-established notification procedures to ensure that customers are notified.

AT&T managed customer will not be given root access. If a managed customer needs root access, once they are given root access, the customer will become a customer-managed co-location client. No customer that was once a managed-customer co-location and receives root access will be able to become a managed customer after they have access, they will be completely customer-managed. In the case of a major hardware or software failure, upon customer request AT&T will:

- Reinstall the operating system limited to a reference configuration only.
- Reinstall the software application, limited to a reference/base configuration only.
- Restore from the most recent backup.

2.4.3 Backup/Restore

Backup - AT&T will provide incremental daily backups and weekly full backups using a central backup system. There are limitations on the amount of data and types of data files (e.g. flat, database) that can be stored. Offsite data storage is available.

Restore - AT&T will provide system and content restore services for managed clients. Up to two restores per month will be included in monthly service fees. Additional restore services will be changed based upon Remote Hands Level B. AT&T will restore data stored for up to 30 days (or as determined by standard backup storage duration).

Restore services will include:

- Hardware restore for AT&T provided hardware
- OS restore
- Content restore from backup tapes
- Database Restore services (MS SQL, Oracle, Informix)

AT&T will recommend a mean time to restore to customers based upon the amount of data being restored (up to 10 GB) or the time necessary to perform the service.

2.4.4 Monitoring Services

One of the tools for the success of an agency's mission is the ability for the agency's Internet operations to be up and running at all times. AT&T uses monitoring and reporting tools for

proactive systems management to help customers improve their service through timely notifications of system resource problems. The three major components that are monitored are included in **Table 2.4.4-1.**

Table 2.4.4-1 Monitoring Options

Monitoring Services	*Description*
Bandwidth	Actual utilization of a network access method monitored at intervals and thresholds.
Network Access (Ping)	Verifying simple network connections using the Internet control management protocol.
Web service (Port 80)	Web service checking and failure notification will be preformed.

AT&T staffs their NOC with technicians that monitor the network and hosted web sites 24x7.

AT&T's operations staff is assisted in its network monitoring task by an SNMP-based (Simple Network Management Protocol) graphic display running independently on two Sun servers. All equipment outages can be observed on these network management stations at a maximum of three-minute intervals. This system is backed up by an ICMP based monitoring system.

2.4.5 Remote Hands

Remote Hands Level A is provided at no additional cost (to managed customers), and involves the most basic activities of an on-site technician, performed with "eyes", "ears", and "fingers", but without involvement of tools, equipment, physical labor, keyboard or other data input. The following types of tasks are examples of included in this service:

Examples of Level A service include:

- Pushing a button
- Switching a toggle
- Setting a dip switch
- Power cycling (turning off and on a equipment)
- Securing cabling to connections
- Observing, describing or reporting or indicator lights or displaying information machines or consoles
- Basic observation and reporting on local environment to AT&T premises.

Remote Hands Level B is provided in accordance with the fee(s) set forth in the price schedule, and involves all the services of Level A, plus some configurations or running of certain basic operations pursuant to real-time instructions of the customer. This level of service does not involve opening or moving equipment or any direct hardware or software interaction.

Examples of Level B service include:

- Running single, built in diagnostic equipment
- Typing commands on a keyboard console
- Changing of pre-labeled tapes
- Cable organization, ties or labels
- Modifying basic cable layout, such as Ethernet or FDDI connections
- Re-labeling equipment
- Backup and restore services for unmanaged co-location clients who do not choose the Managed Storage Services option, or who are in a IDC without the Managed Storage Service option.
- Non-standard installation requirements.

Remote Hands Level C is provided in accordance with the fee(s) set forth in the Price Schedule, and involves all the services of Level B, plus direct contact with equipment configuration, including hardware and software interaction, provided Customer provides accurate, understandable real-time instructions

Examples of Level C include:

- Installing previously received equipment in existing rack space
- Replacing hardware components with spares and upgrades
- Adding memory
- Upgrading drive capacity by installation of new or additional disk drives.
- All tasks involving senior System Administration/Special Project staff members
- All tasks involving unscheduled emergency procedures (installations, troubleshooting etc.).

Fully Managed Firewall Offer

Hardware	*Software*	*User Licenses*	*Max capacity*	*Monitoring and Management*
Nokia 330	Checkpoint Firewall - 1	24-249	28Mbps	Included
Nokia 440	Checkpoint	250 plus	96Mbps	Included

Note: Equivalent hardware and software may be substituted.

Additional Features

Service	*Description*
Network-Based Intrusion Detection Service - (Passive IDS)	The passive IDS blocks network access from anyone who launches a denial of service or penetration attack against a protected network by modifying the active rule base on the network's firewall.

2.4.6 Load Balancing

Load balancing can be thought of as an intra-data center solution, influencing server traffic balancing between servers housed within a data center for optimal performance.

Load balancing can be thought of as an intra-data center solution, influencing server traffic balancing between servers housed within a data center for optimal performance.

2.4.7 Back End Connectivity

Back End Connectivity is the customer's responsibility and can either be ordered separately from AT&T or through an authorized vendor. It can be a frame relay, point to point, or POTS connection between the customer server, hosted in the AT&T Internet Data Center and the customer premise.

For a frame relay connection, the customer orders PVC and a circuit from AT&T Managed Network Services (MNS). It terminates at AT&T Internet Data Center facilities to a router port. The dedicated circuit, local loop, router, and CSU/DSU are owned by AT&T and supported by AT&T staff. The PVC and frame circuit issues will be resolved by AT&T MNS. Back End connectivity is not intended for Internet access. No custom router configuration will be allowed in the shared frame relay connectivity.

The customer or their AT&T Sales Representative is responsible for ordering point-to-point connections and notifying AT&T technical marketing of the order information. The AT&T Local Area Network (LAN) Provisioning group will extend the line(s) to customer rack. Service cannot be extended without circuit information. Notify prov@ attens.com once the circuit(s) have been ordered.

POTS lines can be ordered either by the customer or their AT&T Sales Representative. Once the POTS lines are ordered, the customer or their AT&T Sales Representative must notify AT&T technical marketing of order information. If AT&T is to order the service, billing information is required before placement of an order. POTS line services are billed directly from the Local Exchange Carrier (LEC) to the customer. The AT&T LAN Provisioning group will extend the line(s) to customer rack.

Network Access Method	*Exclusivity*	*Minimum Committed Information Rate (bps)*
Frame Relay	Shared	128K
	Dedicated	128K
Point to Point	Dedicated	1.5M
POTS	Dedicated	N/A

2.5 Internet Data Centers

AT&T Dedicated Hosting Services - Managed Service customers may choose the site(s) at which their servers will reside from the locations currently available. At the time new facilities are available, AT&T Dedicated Hosting Services - Managed Service customers

may have the opportunity to locate in these facilities as soon as the facilities are available for service.

Currently, AT&T has fully operational centers in the United States and the United Kingdom. In addition, AT&T, BT and Concert recently announced massive build-out plans to jointly invest $2 billion over three years to deliver seamless, global e-commerce services via a network of 44 IDCs in 16 countries. Currently a total of 14 centers are available today worldwide through AT&T's alliance with BT and Concert. At the end of the build out schedule, nearly 3 million square feet of space in existing or new centers will be available, giving AT&T and its partners one of the world's largest and most advanced Internet hosting capabilities.

All centers are equipped with Halon or Dry-Pipe fire suppression system, dew point temperature monitoring, and advanced smoke detection systems. All centers are equipped with an Uninterruptable Power Supply (UPS) and an onsite generator.

Access to the network facility is controlled through electronic badge keys, reception area, alarmed doors, closed-circuit monitors and motion detectors. The equipment is also controlled in a secured computer room with access through an Operations Center that is staffed 24x7, video recorded and located behind a door with restricted badge access. Access to non-authorized personnel and vendors are by escort only. Console access to the machines is password controlled.

Data center tours are available for both potential and existing customers. An online virtual tour is available at: http://www.ipservices.att.com/datatour.

2.6 Global IP Network

2.6.1 Internet Data Center and Network Facilities

For any web site, performance depends on two essential elements:

- The quality and scale of the IDC infrastructure, and
- The quality and scale of the backbone network.

AT&T is one of the world's most experienced network operators, with over 100 years of engineering excellence and innovation in the operation of networks and the data and switching centers that run them.

2.7 Internet Data Center Network Infrastructure

AT&T has designed and built reliability into the network infrastructure of each of its IDCs through the use of proven network components and backup or failover hardware, and configurations engineered to provide no single point of failure. Each IDC utilizes two or more *Cisco* 7513 or *Cisco* 12000 Gigabit routers to transmit and receive data over high-speed connections that leave the facility through separate exits and travel physically diverse paths to multiple backbone nodes.

AT&T provisions and maintains all network connections from our IDCs to the AT&T Global IP Network. A diagram of the IDC functional connectivity showing the main paths from each IDC to the nearest major backbone node or peering point appears in **Figure 2.7-1.**

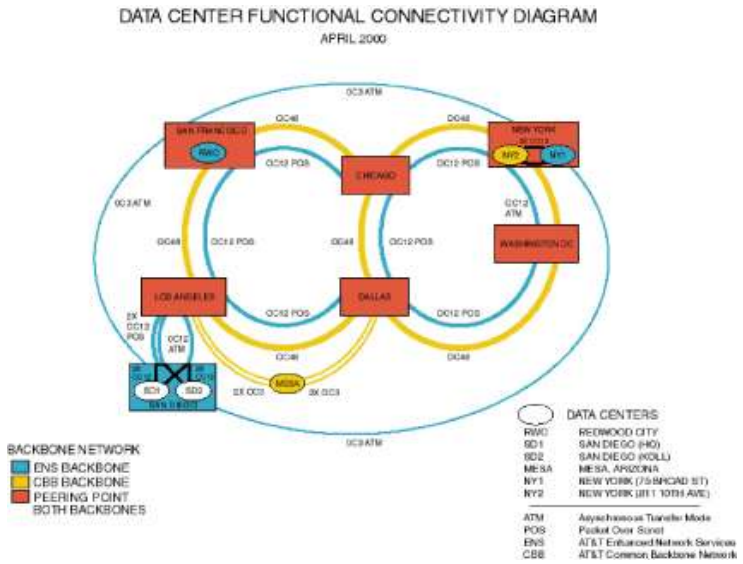

Figure 2.7-1: AT&T Integrated Network Architecture for Web Hosting

Within each IDC, AT&T provides multiple paths to redundant facilities to assure the highest degree of online availability possible. The diagram in **Figure 2.7-2** shows the internal IDC network architecture as it provides egress to two typical customer sites. The customers in this example could build additional reliability into the site configuration through the addition of redundant switches and servers.

2.7.1 AT&T Global IP Network Infrastructure

Figure 2.7-2: AT&T Data Center Architecture

AT&T has worked tirelessly to provide true global connectivity, implementing a strategy to make customers' data accessible from anywhere on the planet. To ensure this, AT&T uses a four-pronged approach.

Unsurpassed Network Performance: AT&T is committed to building the best performing network in the industry. To this end, all backbone nodes are deployed in AT&T carrier grade, "hardened" central offices. These are hardened facilities where only authorized personnel are allowed. AT&T central offices have both battery backup power and emergency generators, as well as a rigorous disaster recovery plan which is tested regularly. AT&T IP backbone nodes are equipped with redundant network monitoring systems to enable our technicians to access any piece of equipment at any time and determine its status, no matter what is going on in the network. All routers are deployed in a redundant fashion with dual processors and dual power supplies. All service-affecting parts are spared locally in the node. Backbone routers are also paired and connected to facilities, which go in diverse directions from the POP. These facilities are links in our high-speed core network, which today is OC-48. We are upgrading to an OC-192 Network, with a goal to complete the upgrade by year end 2000. Currently we have one OC-192 link in use on our network.

Homes Passed and Customers originating on an AT&T network: AT&T, through building and acquisition, has been extending the reach of its networks into millions of businesses, homes, and customers in the U.S. and around the world. The domestic backbone supports millions of business access and Worldnet Dial Access customers. AT&T's broadband acquisitions and joint ventures with TCI, Time Warner, and @Home have positioned AT&T to begin providing broadband IP and local telephone service to millions of homes across the U.S. The TCI Cable Subsidiary passes through 33 million homes, the Time Warner Road Runner Joint Venture passes through 12 million cable homes, and the @Home alliance provides high speed cable Internet access to millions of homes. AT&T's joint venture with British Telecom and its acquisition of the IBM Global Network have been combined to form a new global network called Concert, which provides IP access to millions of consumer and business customers around the world. All these customers will have high-speed direct access to servers hosted on AT&T's infrastructure.

Peering Arrangements to effectively exchange traffic with other ISP's: Through both private peering arrangements and connections at all major Internet Exchange Points, AT&T has direct connectivity to all the major providers. AT&T has retained excellent working relationships with all Internet Exchange Points (IEPs), as well as Metropolitan Area Exchanges (MAEs). These Internet nodes are located throughout the United States. As one of the original participants of National Science Foundation (NSFnet), AT&T's history with such organizations adds industry and professional credibility to AT&T's commitment to reliable content delivery.

International Delivery: AT&T routers carry the entire Global Routing Table. This allows AT&T to deliver significant traffic to areas outside of North America. In addition, AT&T's domestic IP backbone network peers with the AT&T Concert network at four locations: San Francisco, Los Angeles, New York, and Washington D.C. These peering points will enable traffic on the AT&T backbone to be delivered to 55 cities in 35 countries over the global Concert network.

2.7.2 Backbone Topology Map

AT&T's Global IP Backbone Network has been specifically designed for reliability, high speed, efficient routing and low latency. Each major city in which we provide service contains one or more backbone nodes located at AT&T carrier grade, "hardened" centralized facilities that have 24x7 card-keyed access. Each node has high performance *Cisco* 7513 or *Cisco* 12000 Gigabit routers with silicon switch engines, protected power, and dual entrance fiber facilities. At least two OC-3, OC-12, OC-48, or OC-192 links serve each backbone node, connecting it to other AT&T backbone nodes outside the local area. AT&T's attention to detail ensures that even the local loops on these circuits are delivered on protected, self-healing, highly reliable AT&T SONET Rings. For the last 18 months, uptime on our backbone has been at 99.992 percent. And this applies to your service from the IDC to the Internet, including the network and the servers. This is backed up with performance: 99.9 percent network availability.

AT&T allows its backbone to operate at 100 percent spare capacity. Once the backbone

surpasses the above stated traffic allowance the capacity of the backbone is increased to maintain the above stated service levels. Currently, AT&T is in the process of expending their national Internet backbone from OC-3/OC-12 to OC-48/OC-192 speeds. We currently have more on demand bandwidth capacity on our backbone than any other provider in the World today.

AT&T maintains a backbone topology map **(Figure 2.7.2-1)** online at: http://www.ipservices.att.com/backbone/

Figure 2.7.2-1: AT&T IP Backbone Network (YE 2000)

2.7.3 Peering Relationships

In addition to the reliable Internet Data Center infrastructure, the robust performance of the AT&T IP backbone network, and the high number of users that are directly connected to an AT&T network, AT&T customers benefit from AT&T's extensive connections to the global Internet. It is through these partnerships that AT&T customers are in turn connected to virtually all Tier 1 ISP's though public and private peering relationships.

AT&T exchanges traffic at MAE-WEST, CIX-SMDS, MAE-LA, the NEW YORK NAP, and with a number of other networks through direct (private) peering arrangements. That means that network congestion or bottlenecks will never delay your information.

AT&T does not include peering information in its proposals. AT&T is constantly evaluating peering with other Tier 1 Internet Service Providers and this information changes frequently. In addition, certain peering information is strictly confidential and requires a mutual Non-

Disclosure Agreement between AT&T and your agency.

2.7.4 International Presence

AT&T has embarked on strategic initiatives with regard to global connectivity. The AT&T/British Telecom Joint Venture will further expand AT&T's global reach. **Figure 2.7.4-1** shows the global reach of the Concert network.

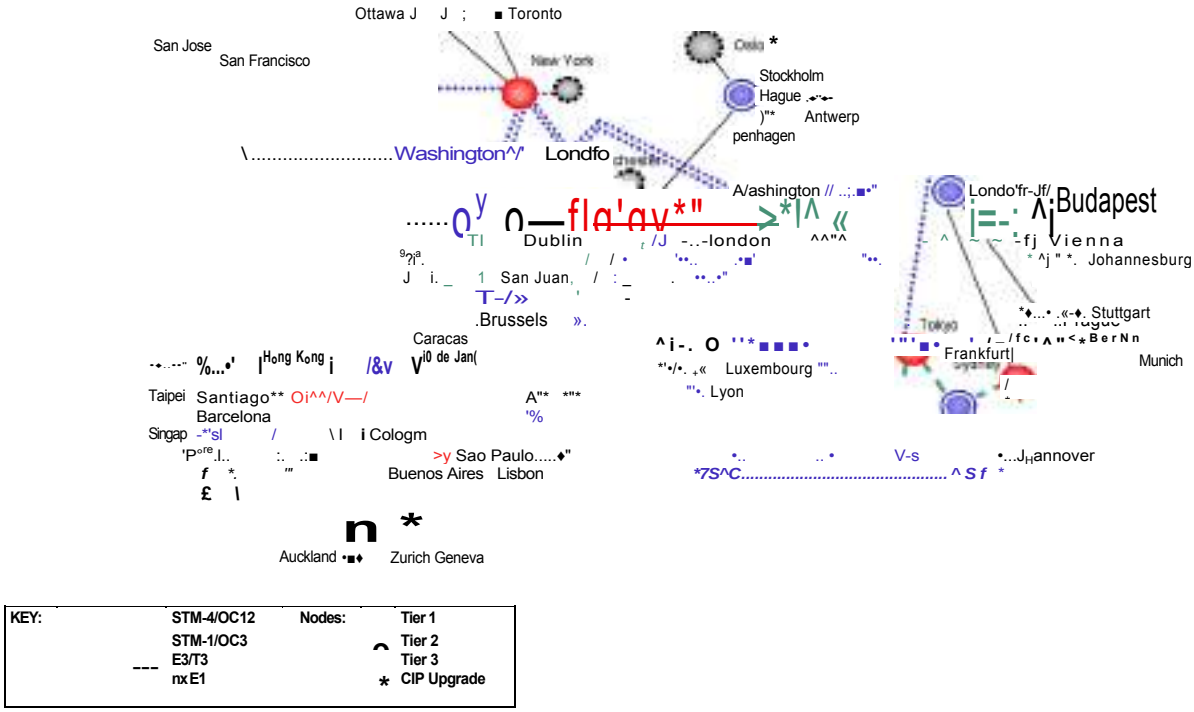

Figure 2.7.4-1: Global Reach of the Concert Network (YE 2000)

2.8 Network Reliability Monitoring and Reporting

AT&T uses a combination of SNMP-based maps, ICMP-based text programs, and SNMP-based capacity graphs to monitor and manage its network architecture. Currently, this is comprised of two separate networks: the AT&T Enhanced Network Services (ENS) Network and the AT&T Global IP Network Backbone.

2.8.1 Network Reliability

AT&T customers can view performance metrics online for both the AT&T ENS network backbone and the AT&T Global IP Network. For the ENS network, customers can see charts of packet deliverability and network latency (speed) refreshed every 15 minutes at:

http://www.cerf.net/traffic/performance.html.

Customers can see similar charts for packet loss and latency as well as status messages on the health of the AT&T Global IP Network at:

http://ipnetwork.bgtmo.ip.att.net/index.html.

Figures 5 and 6 show samples of the performance information available online for the AT&T Global IP Network.

2.8.2 Delay Excursion

Customer web-hosting servers are located in an AT&T Internet Data Center and are directly connected to the Internet via AT&T's Global IP Network. Traveling from coast to coast traffic will typically take approximately 70-80ms due to roundtrip propagation delay. Delay associated with reaching destinations located on the same coast should take approximately 20ms or less.

Figure 2.8.2-1: AT&T IP Network Status from
http://ipnetwork.bgtmo.ip.att.net/index.html

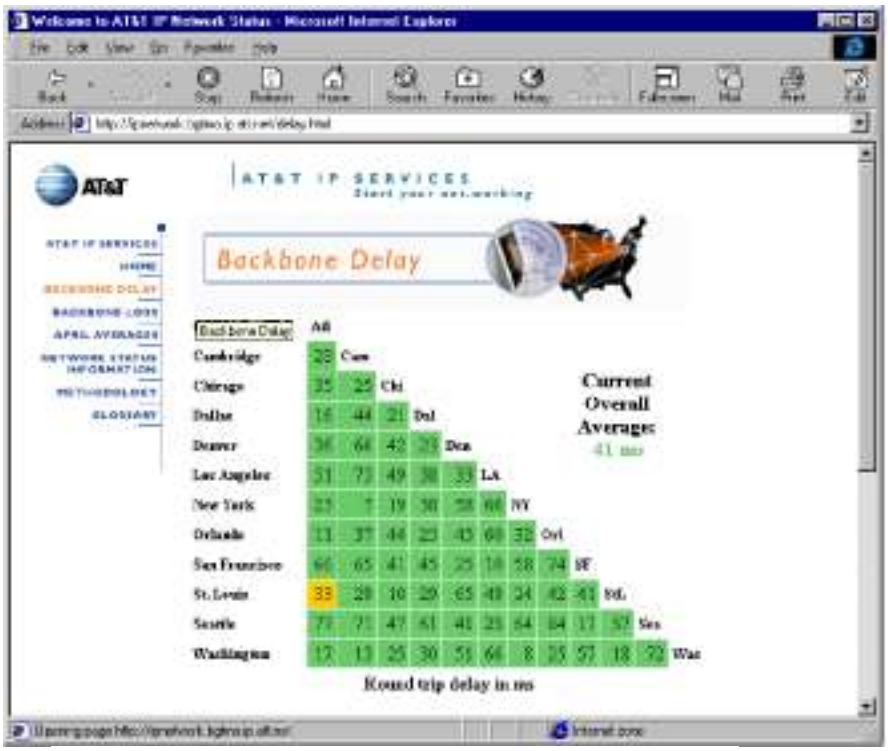

Figure 2.8.2-2: AT&T IP Network Delay from
http://ipnetwork.bgtmo.ip.att.net/delay.html

2.8.3 Connection Availability

AT&T's national network availability percentage is 99.9 percent, which equates to 4 hours of downtime per month. This includes scheduled downtime and downtime associated with the Private Line and ATM network as well. AT&T Local Services cannot guarantee access to networks that are not directly part of ASN 1740. AT&T customer technicians can telnet into the following router that displays the AT&T view of the global Internet: route-server.cerf.net. The command "show IP BGP *ipaddress"* will show which ASNs were transited to reach a specific IP address. AT&T carries the entire BGP routing table.

2.8.4 Routing Reliability

AT&T has had very few routing problems caused by changes made on the network by an AT&T employee. Usually, routing problems occur due to a bug in router IOS code or when AT&T adds a new backbone router to an existing city, which are considered planned maintenance outages. AT&T has an advanced testing laboratory that contains all production equipment deployed in our network. The purpose of the laboratory is to perform regression and compatibility tests on any and all deployed components (hardware and software).

2.9 Operations

2.9.1 Server Management

AT&T site operations are designed to provide continuous service even in the event of hardware and/or network failure. AT&T IDC operators and NOC agents are trained in the administration, maintenance and repair of supported server hardware, ensuring that action can be taken without delay around the clock.

AT&T's goal is to ensure that, on average, no AT&T customer or backbone site is without AT&T service for more than 4 hours per month. This translates to a monthly uptime of 99.45 percent. This goal *includes* downtime resulting from scheduled and unscheduled maintenance activities and hardware, software and telecommunications failures. AT&T has been able to exceed this goal for the last 5 years.

Scheduled maintenance activities are conducted during off-peak hours with 2 weeks notice. In the event that emergency unscheduled maintenance activities are required, AT&T follows pre-established notification procedures to ensure that customers are notified.

2.9.2 Content Management, Uploads and Updates

All AT&T hosted dedicated web servers are under the customer's complete content control. Microsoft NT servers are accessed by means of Microsoft Remote Access Service (RAS). Customers utilize a RAS compatible tool of their choice, such as PC Anywhere. Connectivity is facilitated by private line (dedicated or dial up). Administrative access is secured on AT&T's internal network at the IDCs.

Root access is not permitted for this service. With the exception of initial software and content loading, the customer is solely responsible for the management, upload, and updating of the web server content.

2.10 DNS and IP Allocation Policies

2.10.1 Domain Name Services (DNS)

AT&T supports all DNS functions. If desired, customers are allowed to maintain their own information. Both Primary and Secondary DNS are performed by AT&T host masters.
All change requests are done via e-mail. Change lead-time is generally two business days. Requests for expedited service will be handled on a case-by-case basis. AT&T handles all InterNIC interactions including registering new domains, registration fee, and contact information updates.

2.10.2 AT&T IP Address Policy

In assigning IP address space to its customers, AT&T has based its criteria on both RFC 2050 and the current assignment policy in use by ARIN. These criteria have been developed to

conserve the scarce IPv4 address space. Customers will be assigned address space based on their immediate need, and their future projected need. Exceptions to the criteria will not be made based on insufficient equipment without additional detailed justification.

All address space given out by AT&T is NON-PORTABLE — the addresses do not belong to the customer, and upon cancellation of AT&T service cannot be taken to another service provider.

Customers must understand that ARIN will charge a recurring yearly fee for any address space obtained directly from them. AT&T WILL NOT PAY this fee on behalf of any customer.

2.11 Shipping, Receiving and Inventory Control

Equipment must be labeled with the installation ticket number for AT&T Receiving to accept the shipment. Equipment is assigned a customer code, logged in upon receipt, and tracked in Remedy. When equipment arrives it is asset tagged by the Asset Management group and placed in racks within the IDC. Post installation equipment must be labeled with a new ticket number issued by the AT&T NOC upon request (NOC: 1-888-288-7455)

Shipping is handled via tracking and electronic numbering. Coordinating and adjusting inventory is adjusted on a case by case scenario.

Equipment is either wall or floor mounted, mounted to rack rails, or placed on rack shelves. Labeling includes IP address, machine name, and company name.

2.12 Problem Resolution

AT&T applies to its hosting services the same highly effective approach for end-to-end trouble resolution that has made our Global IP Network among the most reliable in the industry. AT&T's NOC staff continually monitor the performance of the web servers 24x7.

AT&T's technical support is available 24x7 via a toll-free hot-line (1-800-876-2373) and electronic mail access (noc@cerf.net) to report web server or network connectivity problems. Any problem observed by the NOC staff, reported on the hot line, or reported via the mailing list is logged immediately into a trouble ticket system. Troubleshooting and resolution procedures are then initiated.

2.12.1 Scheduled Maintenance and Notification Procedure

AT&T provides two weeks notice for normally scheduled maintenance. AT&T NOC operators will inform designated contact(s) both via e-mail and a phone call.

2.12.2 Trouble Reporting

Trouble reports are tracked using a relational database system driven by a Remedy front-end. A trouble ticket is generated for each incident or network activity that includes the time, date, class/severity, and a chronology of the problem as it is managed among the various operators and engineers. The guidelines for the class of outage defines real-time network problems

experienced:

- **Priority 1:** Customer isolation from the Internet.
- **Priority 2:** Failure of some component of the network, reducing service but not isolating the client.
- **Priority 3:** Failure of a component of the managed network or of the client's Network.
- **Priority 4:** Scheduled maintenance window or observation of a perceived symptom of a problem that may or may not constitute a real network problem.

Mean Time to Respond - AT&T maintains a 2-Hour Mean Time to Respond.

Mean Time to Repair - AT&T maintains a 4-Hour Mean Time to Repair.

2.12.3 Escalation Procedures

All requests for service or trouble should be forwarded to the AT&T NOC via any of the following methods:

- Toll Free phone
- Direct Phone
- Email

Upon trouble notification, the customer will provide the NOC with a priority level that will classify the ticket into one of 3 levels, low, medium, or high.

- **Impact level High** - Connectivity affected, high business impact.
- **Impact level Medium** -Service is functioning, but the issue needs to be resolved promptly.
- **Impact level Low** - General maintenance - Process promptly during normal business hours.

The following procedures are employed depending on the severity of the trouble. AT&T will, at the request of the customer, provide notification at 30-minute intervals.

Table 1 shows the escalations procedures for high, medium, and low priority troubles.

Notify/Update	High Priority	Medium Priority	Low Priority
NOC technician	Immediate	Immediate	Immediate
On Duty Supervisor	Immediate	1 hour/Every hour	2 hours/Every 2 hours
NOC Tier 2 Engineer	15 min/Every 30 min	2 hours/Every 2 hours	4 hours/Every 4 hours
NOC Tier 1 Manager	1 hour/Every hour	4 hours/Every 4 hours	12 hours/Every 12 hours

NOC Tier 2 Manager	1 hour/Every hour	4 hours/Every 4 hours	24 hours/Every 24 hours
Overall Tier 2 Manager	2 hours/Every 2 hours	6 hours/Every 6 hours	24 hours/Every 24 hours
NOC Tier 3 Engineer	3 hours/Every 3 hours	6 hours/Every 6 hours	36 hours/Every 36 hours
Network Operations Director	4 hours/Every 4 hours	8 hours/Every 8 hours	48 hours/Every 48 hours
Operations Director	6 hours/Every 6 hours	10 hours/Every 10 hours	72 hours/Every 72 hours
Vice President Enhanced Network Services	8 hours/Every 8 hours	12 hours/Every 12 hours	96 hours/Every 96 hours

2.13 Customer Service/Support

2.13.1 Customer Service Contacts

AT&T is dedicated to providing the highest quality service in the industry. Customers are supported by several organizations working together to assure effective responses to customer needs and requests. A local customer account team supports each customer. This team of dedicated sales representatives makes it a point to get to know the customer and the customer's business to better apply AT&T solutions for the customer. Customers should contact the local team for service satisfaction, service upgrades, and additional services

The Customer Quality Care (CQC) group at AT&T monitors the performance of operational groups responsible for deploying and managing the AT&T Dedicated Hosting Services. CQC investigates customer issues with operations and billing, and verifies customer requests for credits due to service outages. CQC can be reached at 1-888-288-7455.

For any technical problem, question, or request customers should contact the NOC. NOC personnel are available 24x7 by phone and email to answer questions and receive requests or trouble reports. In the event that a trouble is reported, the NOC technician creates a trouble ticket and initiates resolution and notification procedures per the escalation procedure. The NOC can be reached at 1-888-288-7455.

2.14 Customer Reports and Traffic Analysis Reports

AT&T's Customer Care web site (http://www.cerf.net/customers) provides customers with access to the following performance and account information:

Internet Services Reports	Description
Customer Capacity Graphs	**Customer Capacity Graphs show traffic utilization in daily, weekly, monthly, and yearly graphs. Similar to the Backbone Capacity Graphs shown below.**
Customer Information	**Contact information for reporting customer service**
Trouble Ticket Summaries	**Summaries of service interruptions and resolutions.**

Network Backbone Reports	Description
Network Performance	Shows percentage of packet delivery and delay on backbone links. See Figure 6.
Backbone Capacity Graphs	Capacity Graphs show traffic utilization in daily, weekly, monthly, and yearly graphs. See below.
Network Status	Status of the AT&T network and the Internet. Reports known outages.
Scheduled Maintenance	Scheduled maintenance that will or may lead to service interruption.

San Diego and MAE-West OC3

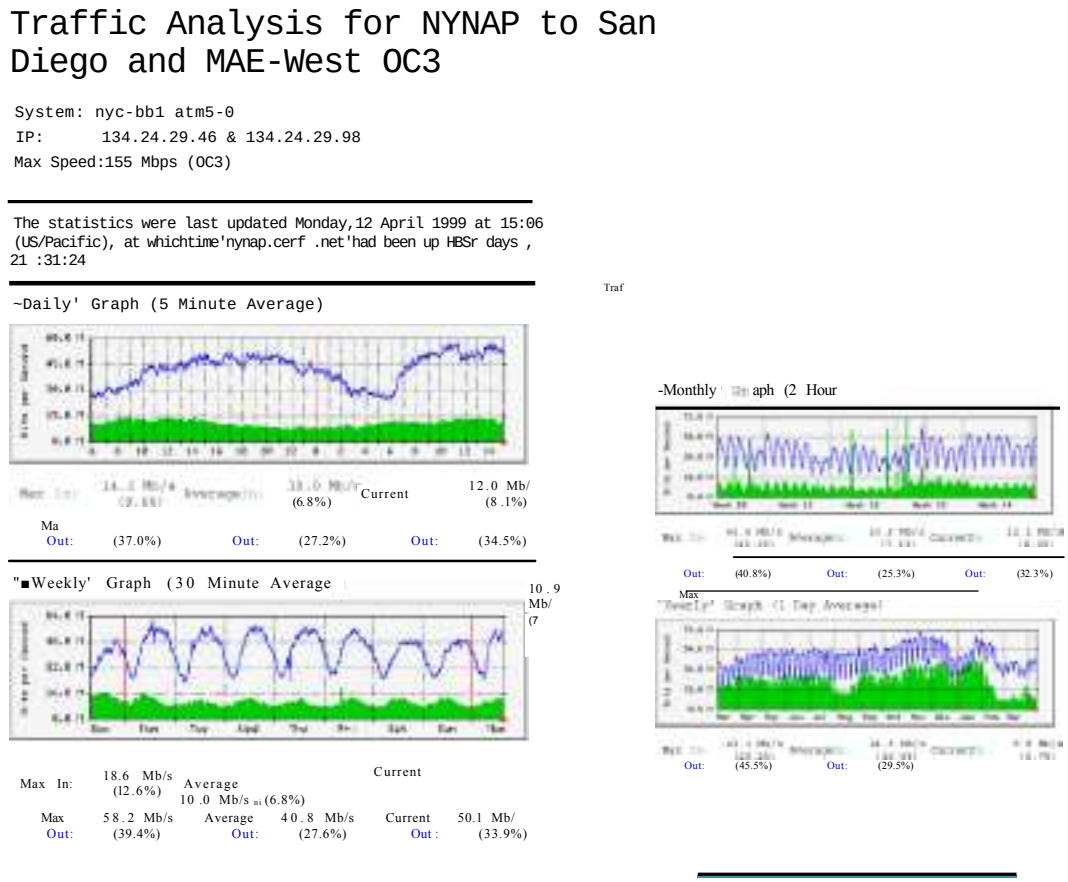

Figure 2.14-1: Backbone Capacity Graphs

2.15 Security

2.15.1 Facility Security

Preventative tools and techniques are added to all AT&T managed reference system and application platforms that severely lessen the risk of a system compromise. Unnecessary system services and applications are permanently disabled, directory and file permissions are strictly enforced, and relevant operating system and application security related patches are applied in a timely manner. In addition, TCP/IP filtering and authentication tools are applied and system and application logs are logged to dedicated logging servers where they are analyzed for anomalies and errors. Dedicated intrusion detection system services are also available as an additional option upon request.

2.15.2 Server Security

Preventative tools and techniques are added to all AT&T managed reference system and application platforms that severely lessen the risk of a system compromise. Unnecessary system services and applications are permanently disabled, directory and file permissions are strictly enforced, and relevant operating system and application security related patches are applied in a timely manner. In addition, TCP/IP filtering and authentication tools are applied and system and application logs are logged to dedicated logging servers where they are analyzed for anomalies and errors. Dedicated intrusion detection system services are also available as an additional option upon request.

2.15.3 Additional Security features

2.15.3.1 Managed Security Services

Managed Security Services provide an additional level of security including managed firewall and intrusion detection. The managed security solutions provide the initial and essential network security functions for customers who implement Internet-based internetworking.

Performance Targets

AT&T Dedicated Hosting Services' national availability percentage is 99.45 percent for managed (connectivity and hosting) services.

The following is AT&T's standard Service Level Agreement (SLA) based on server availability:

- All measurements are based on a thirty (30) day measurement period.
- Server availability of 99.45 percent, which equates to four (4) hours per month of downtime. This downtime will include scheduled and unscheduled maintenance windows. These targets apply for fully managed servers only. SLAs do not apply for customers with root access. For Co-location services network availability is 99.9 percent.
- Mean time to respond to trouble reports is 15 minutes. Calls that are not answered directly will receive a call back within 15 minutes of the time the message is recorded.

- Mean time to restore service is 2 hours. Any service outage will be resolved and the service will be brought back on-line within two hours.
- Mean time to repair is 4 hours. The cause of the service outage will be corrected within four hours.
- If an AT&T-hosted Customer reports that an end user has been unable to access their Web Site due to the unavailability of the AT&T content hosting production web server, the customer will be eligible to receive a credit against his/her hosting Monthly Service Fee incurred during the affected month as specified below, subject to the program rules and regulations set forth below.

Interruption Length	Credit
Less than 4 hr.	None
4 hr. -7 hr. 59 min.	1/3 day
8 hr. - 11 hr. 59 min.	V_2 day
12 hr. - 15 hr. 59 min	2/3 day
16 hr. - 24 hr.	One day

Interruptions Over 24 Hours - Interruptions over 24 hours will be credited 1/6 day for each 4-hour period or fraction thereof. No more than one full day's credit will be allowed for any period of 24 hours.

- Due to the design of the public Internet, AT&T can offer no end-to-end service guarantees to sites not on the AT&T Global IP Network. This means that even when AT&T Internet connection is in perfect working order, our customers may not be able to reach a particular site (www or otherwise) at a given point in time.
- Other restrictions and conditions may apply.

2.16 Acceptable Use Policy

2.16.1 Policy Introduction

AT&T has published this Acceptable Use Policy as part of our overall effort to provide high quality, reliable service to our customers; protect the privacy and security of our customers, systems, and networks; encourage responsible use of AT&T's and other ISPs' resources; and comply with applicable laws. This Policy describes the types of uses of the AT&T IP Network which are contrary to our objectives and which are, therefore, prohibited. To achieve our objectives, AT&T may in its sole discretion determine whether a use of the AT&T IP Network is a violation of this Policy. While it is not AT&T's intent to monitor, control, or censor communications on the AT&T IP Network, when we become aware of a violation of this Policy, we may take such action as we deem appropriate to address the violation, as referenced below.

This Policy applies to all customers of AT&T's IP services, and to all other users of the AT&T IP Network. This Policy supplements, but does not supersede, the contracts that customers have with AT&T; if such a contract restricts a use of the AT&T IP Network that is not addressed in this Policy, the contract will govern with respect to such use.

2.16.2 Prohibited Uses

Uses of the AT&T IP Network described below are prohibited under this Policy. These descriptions are guidelines and are not intended to be exhaustive.

2.16.3 Illegal/Criminal Activity

The AT&T IP Network may not be used in connection with criminal or civil violations of state, federal, or international laws, regulations, or other government requirements. Such violations include theft or infringement of copyrights, trademarks, trade secrets, or other types of intellectual property; fraud; forgery; theft or misappropriation of funds, credit cards, or personal information; and threats of physical harm or harassment.

2.16.4 Security Violations

The AT&T IP Network may not be used in connection with attempts - whether or not successful to violate the security of a network, service, or other system. Examples of prohibited activities include hacking, cracking into, monitoring, or using systems without authorization; scanning ports; conducting denial of service attacks; and distributing viruses or other harmful software.

AT&T customers are responsible for maintaining the basic security of their systems to prevent their use by others in a manner that violates this Policy. Examples include improperly securing a mail server so that it may be used by others to distribute SPAM, and improperly securing an FTP server so that it may be used by others to illegally distribute licensed software. Customers are responsible for taking corrective actions on vulnerable or exploited systems to prevent continued abuse.

2.16.5 Threats

The AT&T IP Network may not be used to transmit materials of a threatening nature, including threats of death or physical harm, harassment, libel, and defamation.

2.16.6 Offensive Materials

The AT&T IP Network may not be used for the distribution of offensive materials, including obscene, pornographic, indecent, and hateful materials.

2.16.7 Spam

Spam is an unacceptable use of the AT&T IP Network. Spam includes any of the following activities:

- Posting a single message or messages similar in content, to more than five online forums or newsgroups.
- Posting messages to online forums or newsgroups that violate the rules of the forums or newsgroups.

- Collecting the responses from unsolicited email.
- Sending any unsolicited e-mail that could be expected, in AT&T's discretion, to provoke complaints.
- Sending email with charity requests, petitions for signatures, or any chain mail related materials.
- Sending unsolicited email without identifying in the email a clear and easy means to be excluded from receiving additional email from the originator of the email.
- Sending email that does not accurately identify the sender, the sender's return address, and the email address of origin.
- Using AT&T facilities to violate another ISP's acceptable use policy and/or terms of service.

2.16.8 Indirect Access

A violation of this Policy by someone having only indirect access to the AT&T IP Network through a customer or other user will be considered a violation by the customer or other user, whether or not with the knowledge or consent of the customer or other user. For example, Down Stream Providers are responsible for the actions of customers to whom they provide services operating on the AT&T IP Network. AT&T will address and attempt to resolve complaints about the actions of customers of Down Stream Providers with the Down Stream Provider.

In addition, this policy applies to any email or content transmitted by you or on your behalf which uses an AT&T account as a mailbox for responses or promotes content hosted or transmitted using AT&T facilities, or which indicates in any way that AT&T was involved in the transmission of such email or content.

The resale of AT&T products and services is not permitted, unless expressly permitted in a written agreement with AT&T.

2.16.9 Consequences

Violations of this Policy may result in a demand for immediate removal of offending material, immediate temporary or permanent filtering, blocked access, suspension or termination of service, or other action appropriate to the violation, as determined by AT&T in its sole discretion. When feasible, it is AT&T's preference to give notice so that violations may be addressed voluntarily; however, AT&T reserves the right to act without notice when necessary, as determined by AT&T in its sole discretion. AT&T may involve, and will cooperate with, law enforcement if criminal activity is suspected. Violators may also be subject to civil or criminal liability under applicable law. Refunds or credits are not issued in connection with actions taken for violations of this Policy.

2.16.10 Incident Reporting

Any complaints regarding violations of this Policy by an AT&T customer should be directed to abuse@att.net. Where possible, include details that would assist AT&T in investigating and

resolving the complaint (i.e. expanded headers and a copy of the offending transmission).

2.16.11 Contact Information

Please contact the AT&T abuse desk by sending email to abuse@att.net.

2.16.12 Revisions to this Policy

AT&T may modify this Policy at any time. Modifications are effective when posted to AT&T's public web site. Notice may also be provided.

AT&T Internet Services MIS CPE is to be used exclusively for access to the AT&T provided service. The customer may choose to utilize the second serial interface on the *Cisco* 25xx series routers; an acceptable use is to provide a 2 second connection to the AT&T Internet Services MIS. Connecting a remote customer location through the 2 second serial port is not an acceptable use.

AT&T Business Internet Service
Service Description

3 AT&T Business Internet Service Overview

AT&T Business Internet Service offers a single integrated remote access solution for both your U.S. and International End Users. We offer flexible analog speeds up to 56 Kbps and up to 128 Kbps with ISDN. The remote client configuration feature has the ability to automatically configure the Netscape and Microsoft browser and e-mail programs provided with our dial access kit. Helpdesk support is provided globally and is available in English in the United States as well as both English and the language of the local country in other countries. The U.S. Help Desk is generally available to receive your calls twenty-four hours a day, seven days a week (24x7) and is available during extended business hours in the other countries. The help desk provides assistance with connectivity, configuration and service. In addition to telephone support, our customers may report a problem online 24x7 from our home page www.attbusiness.net.

AT&T Business Internet Service provides an Internet access kit which includes an AT&T Dialer, an Internet mail client and a World Wide Web browser. A 12 MB Post Office 3 Protocol (pop3) mail account is included and allows for an optional custom mail domain that can identify your agency. Additionally, we include Web Mail, which is an e-mail service that allows users to access their e-mail from virtually any computer connected to the Internet. With Web Mail, you can view and respond to your new e-mails via a browser after the computer has established an Internet connection. Security authentication is tightly controlled, as your end users must supply an account, user ID and password to access AT&T's network. Our Fenced Internet option helps you to control what sites your end users can access. Personal Web space is also available for those that want to create their own web pages. Once connected to AT&T Business Internet Service, you may operate your own Virtual Private Network (VPN) using one of the many well known VPN products.

There are currently over 775 points of presence (POP) in the U.S. and over 1,200 globally. Several countries in EMEA and Asia Pacific use a convenient toll free nationwide phone number for access from anywhere in the country. The vast majority of our POPs offer v.90 capabilities with ISDN connections also available in a large portion of the access points.

3.1 Features

AT&T Business Internet Service is designed to integrate, now and in the future, with other AT&T business services such as virtual private network, dedicated access and Web hosting. Plus, we offer these standard features:

- Local dial access available currently from more than 775 U.S. cities, 1,200 access points throughout the world
- Support for V.34/V.90 with dial access speeds to 56 Kbps and up to 128 Kbps with ISDN in selected cities
- AT&T Global Network Dialer for Windows 95/98/2000/ME/NT, Win CE, Macintosh, and Palm Pilot
- Use of Internet applications

- Optional custom mail domain name
- Access to newsgroups
- Use of AT&T Business Internet Service accounts, IDs, passwords.

3.2 The AT&T Dialer

Connection to AT&T Business Internet Service is easy with our state of the art dialer, which automatically configures software for simple set up. Customization of the dialer is available to help meet your unique agency needs.

Our dialer contains a list of all dial access numbers globally. Within the U.S. and Canada, an additional optional feature is available. If the Exchange and Local Calling Area database file is available, you can enter your Area Code and Exchange (the first three digits of the local portion of your phone number), and we will present a sorted list of access numbers. Generally, the number at the top of the list will be the least expensive number to dial from the area code and exchange that you have provided. [1] As an AT&T Business Internet Service customer, you can easily take advantage of the latest enhancements to our dialer by receiving automated software and phone list updates electronically. We also give you the option to have the software check for updates at the frequency you desire. In addition, you may specify what versions you would like made available to you users. This allows you the time to do your own in house quality assurance testing prior to making a new version available to your end users. Our software is available for download from our site at http://www.attbusiness.net. The use of multiple user profiles is available for your associates who travel frequently and want to avoid establishing new profiles while on the road.

The AT&T dialer is compatible with most operating systems including Windows 95/98/ME/2000 and NT with versions available in English, Brazilian Portuguese, French and Spanish. It is also available for Macintosh, Win CE and Palm Pilot. The dialer contains software that transparently collects connection data that is used by AT&T to measure the customer experience connecting to our network and to quickly correct any areas where there are problems.

[1] While this represents what we currently believe to be the least expensive number to dial from the area code and exchange that you have supplied, this information may not, in all instances be correct. Further, this information may change, without notice to you, from time to time. You should check with your local telephone service provider if you wish to verify that your chosen number in fact provides the least expensive connection from the area code and exchange where you are accessing the service.

3.3 International Access

AT&T Business Internet Service is global, currently more than 55 countries are accessible using the same software dialer and technology. There is no requirement to download additional

software. For your convenience, a list of all of our global dial access numbers and global help desk numbers are included in our dial software.

AT&T Business Internet Service covers four global regions:

- North America (U.S. & Canada)
- Latin America (South America, Mexico, Curacao)
- EMEA (Europe, Middle East & Africa)
- Asia Pacific.

There are no roaming charges to agency users while traveling in their home region. A competitive hourly charge will apply to users roaming outside of their home region.

To view a complete list of the countries where we provide access, please visit the URL of http://attbusiness.net/regctr/index.html and select "our access numbers."

3.4 Help Desk

AT&T's world class help desk is accessible globally to AT&T Business Internet Service customers. Worldwide, common tracking systems and tools are shared which makes problem determination and resolutions between countries seamless. Escalation procedures are also common to ensure that customers receive the same consistent quality service no matter where they are. Our well-trained representatives are also technical experts who also provide support in the local language. The help desk philosophy, available in most major areas 24x7, is to resolve our customer's problems in a timely and professional manner as well as to continually analyze the reasons customers call in order to further improve our service. When the customer visits www.attbusiness.net, they will find a complete Help center that contains many helpful tutorials and graphical self-help documents.

3.5 Fenced Internet Option

Fenced Internet allows your agency to limit the access of your users to a defined set of servers and web sites. You are able to define a list of up to 90 IP addresses. Attempts to access sites that are not on the authorized lists will be denied.

3.6 Authentication

AT&T handles the security authentication into our service using a user id and password to logon to our network. AT&T also supports SecureID, Safeword and RADIUS third party authentication. This allows our customers to provide the security authentication rather than the authentication provided normally by AT&T.

Users of AT&T Business Internet Service place a call to a dial gateway, which authenticates the user's account, and password. When the requester is authenticated, the dial gateway assigns an IP address, sends it to the requesting device and the IP route to the Internet is established. At this point the user starts one or more TCP/IP applications.

3.7 Customer Benefits

AT&T Business Internet Service gives you a one-stop source for Internet access, with network reliability, easy installation and use, flexible billing options, security features and world-class customer support. Other benefits include:

- State of the art network technology
- High performance dial communications with speeds up to 56 Kbps and 128 Kb with ISDN
- POPs currently in over 55 countries with more than 1,200 POPs worldwide
- Global roaming available for the traveling user
- Advanced dial gateway technical platform enabling fast deployment of dial enhancements
- Automatic updates of dialer software, modem lists and phone directories
- Web Mail
- Automatic remote client configuration to reduce the possibility of configuration errors
- Fenced Internet feature for increased productivity and security via customer-controlled access to Internet sites for end users
- VPN Ready
- Online help center for quick answers to your questions
- Global help desks with English and local language support
- Physically secure, managed high speed backbone
- Provides customers with a consistent worldwide dial access capability
- Same account ID, Customer ID and password globally
- Invoice billing.

3.8 Pricing Plans

AT&T offers multiple pricing plans to meet the agencies' usage needs. All include access to end user business grade customer service. A brief description of each of our United States corporate plans follows.

3.8.1 Base Plan

This plan is for the company that only requires a few hours of Internet access per user per month. Each user is charged per hour of connection time.

3.8.2 Intermediate Plan

If the customer has 5 - 24 end users, this plan is ideal. Each user can receive up to 150 hours of

Internet access for one low price. A small hourly charge applies to hours in excess of 150 hours. One e-mail ID is included with each access ID.

3.8.3 Enterprise Plan

This plan is designed for 25 end users or more. For an agency with 25 registered IDs, you may take advantage of this plan which offers all the benefits of the Intermediate plan but with a price advantage.

3.8.4 Account Cap Plan

If the customer has a few "power users", but the bulk of the users will be on for only a few hours a month, this plan may appeal to your company. One per user charge is applied for an average of 23 hours of use per end user. If the average hours of use exceed 23, a small hour charge is applied. This plan is only available for 500 or more users.

3.8.5 Credit Card Plans

AT&T has convenient credit card billing plans as well. Once a customer downloads our software or receives an Internet access kit, he can simply dial in and register to the service. The plans available will be shown at registration.

3.9 Billing

The Government Purchase Card can be used for immediate Internet access under AT&T's credit card plans.

With five or more users, your agency can establish a standard billing agreement and get a single monthly invoice from AT&T covering all user IDs. Detailed billing reports are provided and departmental billing is available.

3.10 Summary

AT&T Business Internet Service provides a comprehensive suite of access, application and service features combined with high-speed Internet access. These services are designed to support the corporate user, offering low cost connectivity to the Internet.

AT&T Digital Subscriber Line Internet Service
Service Description

4 AT&T Digital Subscriber Line Internet Service

4.1 Service Description

AT&T's Digital Subscriber Line (DSL) Internet service solves the telephone network congestion problems by sidestepping local phone company switching bottlenecks. This service gives agencies high-speed access to the Internet, twenty-four hours a day, seven days a week (24x7), managed by AT&T. DSL is able to offer lower costs because it dramatically reduces the circuit access charges and allows for traffic aggregation across a large number of customers. Moreover, DSL boosts speeds up to 50 times faster than 28.8 Kbps analog modems and up to 25 times faster than 56 Kbps modems.

Until now, medium and small agencies have not been able to enjoy the full benefits of the Internet revolution. Dial up access is certainly affordable, but too slow. ISDN service is faster but expensive. Besides being affordable, DSL is the perfect solution for small to medium sized agencies, remote branch offices, telecommuters and small offices/home offices. AT&T DSL Internet Service enables agencies to communicate with millions of Internet users and countless information resources around the world.

DSL is a broadband access technology that allows transmission at bandwidths from 144 Kbps to 1.5 Mbps. DSL offers high bandwidth at lower prices than other types of Private Line access. DSL Technology is available in several varieties. AT&T DSL Internet Service utilizes SDSL, ADSL and ISDL access technologies (described below). The type of DSL access utilized will depend upon the access speed and the distance the user is from the central office. The maximum speed possible on a loop varies inversely with the length of the local loop. The longer the loop, the smaller the data speed. The suite of DSL services that are available from AT&T include:

- **Symmetric Digital Subscriber Line** (SDSL): SDSL provides up to 1.5 Mbps duplex bandwidth. The maximum bandwidth varies depending upon the distance of customer location from the central office (where the phone terminates). The larger the distance, the smaller the bandwidth.
- **Asymmetric Digital Subscriber Line** (ADSL): ADSL provides asymmetric bandwidth to the customer premises. The downstream bandwidth (to the customer from the network) is larger than the upstream bandwidth (to the network from the customer). The customer eligibility for these bandwidths depends upon the distance the user is from the central office just like SDSL. ADSL is used for Internet and remote Local Area Network (LAN) access.
- **ISDN Digital Subscriber Line** (IDSL): IDSL provides up to 144 Kbps transfer rates in each direction (similar to ISDN).

Service availability is dependent upon the geographic location of the customer. Customers must contract their AT&T Sales Representative to determine the availability of DSL for their location.

AT&T DSL Internet Service Offer

Option	*Description*
Single User 608/128 Kbps - Available @ Residential Locations Only • Always on connection • Affordable Pricing • High Speed • Uses existing Phone Line • Self-Installation.	• Connects one user to the Internet • One IP address per site - Dynamic • Available in speeds of 608K/128K, 1.5M/384K, 144/144 K • Can get up to 2 free attglobal.net mail accounts. These accounts which have a mail attachment capacity of 3 MB • Additional attglobal.net mailboxes can be purchased • Managed Option Available - AT&T provides the DSL modem/router for a regular monthly fee and provides remote configuration of the DSL modem/router; free repair or replacement in the case of modem/router failure; free software upgrades to the DSL modem/router and ongoing management and repair. It is not necessary to purchase the modem or router at the time of installation. • Self-Installation allows the end-user to install their own DSL equipment without a visit from a technician, providing the answer of three questions.
Single User • Always on connection • Affordable Pricing • High Speed • Allows for connections of locations at longer distances from the Telco Central Office.	• Connects one user to the Internet • One IP address per site - Dynamic • Available speed - 144/144K • Can get up to 2 free attglobal.net mail accounts. These accounts which have a mail attachment capacity of 3 MB • Additional attglobal.net mailboxes can be purchased • Managed Option Available - AT&T provides the DSL router for a regular monthly fee and provides remote configuration of the DSL router; on-site installation; free repair or replacement in the case of router failure; free software upgrades to the DSL router and ongoing management and repair. It is not necessary to purchase the router at the time of installation. • Installation of new telephone line and j ack up to 50 feet from Telephone Network Interface** • Self-Installation allows the end-user to install their own DSL equipment without a visit from a technician, providing the answer of three questions.
Multi-User • Connects multiple PCs (up to 29)* to the Net through a single, always on connection • Increase productivity • Same high-speed access both to and from the Internet • Affordable Pricing • High Speed **Computers must be networked via an Ethernet Hub*	• LAN connection to the Internet • Routed connection • Up to 29 usable Static IP addresses • Available in speeds of 144/144K, 192/192K; 384/384K; 768/768K; 1.1/1.1M; 1.5/1.5M • Multi-user customers can get up to 5 free attglobal.net mailboxes. • Customers wishing to purchase additional attglobal.net mailboxes, will be charged a fee for each additional mailbox. • Managed Option Available - AT&T provides the DSL router for a regular monthly fee and provides remote configuration of the DSL router; on-site installation; free repair or replacement in the case of router failure; free software upgrades to the DSL router and ongoing management and repair. It is not necessary to purchase the router at the time of installation. Dynamic Host Configuration Protocol (DHCP) which provides dynamic addressing is provided in Managed Multi-user Service. • Installation of new telephone line and j ack up to 50 feet from Telephone Network Interface.**

Self-Installation applies to ADSL Line shared single users. The customer will need to answer three questions: 1) Do you have six or more devices on the phone line that will be utilizing DSL? 2) Do you have a Burglar Alarm or TDD on the phone line? 3) Is there any other device that will require the use of a splitter on the phone line? If the customer answers yes to any of these questions, they will be charged a fee for a professional installation.

Single User Options for 608K/128K and 1.5M/384K are used when there is only one PC connected to the DSL. The 608K/128K service is ONLY Available @ Business Locations. The 1.5M/384K service is available @ Business locations. This DSL service will be implemented on an existing telephone line as line shared.

Single User Option for 144/144K is used when there is only one PC connected to the DSL and is intended for use at all qualified residential or business locations. This Single User DSL service will be implemented with a new line.

Multi-User Option is used when there is more than one PC connected on a LAN. The LAN is connected to the DSL using a DSL Router and all PCs share the DSL service. This DSL service will be implemented with a new line.

The following operating systems are supported for Single and Multi-User Options: Win 95; Win 98; Win NT & Mac OS Win 2000.

** An Additional Inside Wiring Charge of $100 may apply if wiring that will take longer than 15 minutes is required. The Field Service Technician will provide up to 2 hours of inside wiring. In this case, the Additional Inside Wiring Charge of $100 will apply. If Extensive Inside Wiring is needed (longer than 2 hours), AT&T will not perform this work. The client is responsible for contracting a third party top have the Extensive Inside Wiring completed. The Field Service Technician will test and turn-up the circuit at the Network Interface Device (NID).

4.2 Benefits

AT&T Internet Service DSL offers agencies many advantages, including the following:

- AT&T has available DSL service in many markets nationwide- see Addendum.
- Private peering arrangements allow AT&T to provide the fastest Internet access possible
- Offers speeds up to 50 times faster than 28.8 Kbps analog modems - and up to 25 times faster than 56 Kbps modems
- Ease of ongoing installation and ongoing support
- Provides high-speed remote access to your Wide Area Network (WAN) environment
- No dialing in and logging on - no busy signals ever
- Offers an access solution that's particularly cost-effective for growing agencies
- Offers a Single User Line Sharing Option - use your existing phone line for both analog phone service and AT&T DSL service
- Service Level Agreement for Multi User service.

You can most specifically benefit from AT&T DSL Internet Service if you operate:

- A small business or small office/home office using analog dial Internet access and need higher bandwidth
- A small to mid-sized business running 56 Kbps private line or ISDN Internet access

- A medium or large business with fractional T1 Internet access.

4.3 Service Level Agreement - Service Availability Guarantee

Customers of the AT&T DSL Internet Service who have purchased and been provisioned with Multi-User Service ("Customers") are provided a limited guarantee of service availability. If a Customer experiences a Service Outage in excess of 60 consecutive minutes for any of Customer's Multi-User DSL lines during any calendar day, the Customer will be eligible for a credit of one day's worth (1/30th) of the Customer's Monthly Service Fee.

4.4 How DSL Works

Traditional phone service (sometimes called "Plain Old Telephone Service" or POTS) connects your home or small business to a telephone company office over copper wires that are wound around each other and called twisted pair. Traditional phone service was created to let you exchange voice information with other phone users and the type of signal used for this kind of transmission is called an analog signal. An input device such as a phone set takes an acoustic signal and converts it into an electrical equivalent in terms of volume and pitch. Since the telephone company's signaling is already set up for this analog wave transmission, it's easier for it to use that as the way to get information back and forth between your telephone and the telephone company.

Because analog transmission only uses a small portion of the available amount of information that could be transmitted over copper wires, the maximum amount of data that you can receive using ordinary modems is about 56 Kbps. The ability of your computer to receive information is constrained by the fact that the telephone company filters information that arrives as digital data, puts it into analog form for your telephone line, and requires your modem to change it back into digital. DSL is a technology that assumes digital data does not require change into analog form and back. Digital data is transmitted to your computer directly as digital data and this allows the phone company to use a much wider bandwidth for transmitting it to you.

4.5 Ordering & Customer Care Support

Once your DSL service is up and running, you can contact the AT&T Customer Care Center toll free for trouble-reporting, billing inquiries, canceling/changing (from one bandwidth to another) service, and technical questions. The number to call for billing, provisioning and maintenance inquiry is 1-877-XDSL-ATT.

SafeNet Virtual Private Network (VPN) Service Description

5 SafeNet VPN Product Overview

SafeNet, Inc. offers a full complement of gateways, clients, and management systems to meet the varied Virtual Private Network (VPN) requirements of today's dynamic businesses. SafeNet products offer a comprehensive, centrally managed, security solution that enables VPNs to operate at an affordable price. SafeNet is available as an integrated family of products or as a complete, managed VPN security service. Its products provide a full range of Internet security-access control, encryption, user authentication, and message authentication based on the IPSec industry standards. SafeNet products include gateway encryptors, client software, smartcards, and a management center with an integrated Certificate Authority (CA). In order to utilize the SafeNet products described below, users must also order AT&T's Business Internet Service, AT&T DSL Internet Service and/or AT&T's Managed Internet Service as described in AT&T's GSA Schedule pricelist.

5.1 The SafeNet Product Line Includes these Components

5.1.1 SafeNet/Security Center™ (S/SC)

The SafeNet/Security Center (S/SC) is an independent workstation that runs the Windows® NT® operating system and the S/SC software to perform key, security, and Personal Identification Numbers (PIN) management; device registration; user enrollment; auditing; and monitoring functions for S/SC client and gateway products. It can support a wide array of SafeNet security products on multiple networks and is the only Internet VPN security management product that can administer filter rules, encryption keys, and user PINs from a central location.

The S/SC provides easy and efficient management and maintenance of Internet VPNs or TCP/IP networks. Central management helps prevent unauthorized access by both internal and external "snoopers." Implementation of formal enforcement policies and procedures, centralized accountability, and an effective, real-time, online auditing process foils even the most persistent hacker. Transparent to the end user, the S/SC can centrally configure SafeNet products to ensure technical accuracy.

The S/SC establishes and maintains encryption keys. SafeNet products request and automate key service as needed. Keys can also be changed at the S/SC, according to predetermined schedules established by the security officer/administrator. All that's needed for the S/SC to begin security operations is to connect the hardware and perform the initial configuration.

The S/SC supports these features:

- IPSec-standard transforms
- Internet Key Exchange (IKE) using ISAKMP/Oakley)
- ANSI X.509 V.3 certificates for user authentication
- SafeNet version 2 symmetrical (secret) key devices
- Triple-DES (168) encryption, MD5, and SHA-1 for message authentication
- Centralized management of public key policy and access control of public key products

- Centralized Management of all SafeNet Enterprise Devices
- Users, Security Profiles, User Enrollment, Database Maintenance
- Certificate Administration
- Integrated or External Certificate Authority support
- Verisign, Entrust, Baltimore Technologies,...
- Device and User Certificates
- X.500, PKCS15 - Support for other applications
- Includes a public key wizard for registering PK clients and Gateways
- Automatic Policy Changes.

5.1.2 SafeNet/Speed™ Gateway Encryptor

The SafeNet/Speed Gateway Encryptor protects network connections using Triple-DES encryption, public key technology, and packet authentication combined with firewall techniques such as packet filtering. Because SafeNet/Speed is a self-contained, non-programmable unit that responds only to encrypted and authenticated management commands, it cannot be successfully attacked from the network.

SafeNet/Speed provides a fast, upgradeable IPSec gateway encryptor using standard authentication schemes, uncompromised Triple-DES encryption in public key mode, and access control in a scaleable, centrally managed VPN system. SafeNet/Speed provides T1-T3 throughput of encrypted data to securely tunnel data from Ethernet networks across the Internet or private TCP/IP networks. Easy in-field upgrades enable encrypting box capabilities to grow to match the expanding network needs of organizations. With auto-sensing network speeds of 10 Mbps and 100 Mbps, SafeNet/Speed is ideal for environments where network resources are being upgraded. SafeNet/Speed provides cost-effective, fast, and reliable protection for your networks and investment protection for the customer's bottom line.

- Centrally Managed IPSec VPN Gateway
- Secures Intranet, Extranet and Remote Acces
- Speed-SFE: Support for up to 4000 concurrent tunnels 70+MB
- Using 3DES and SHA-1
- Full Meshed Network Support
- Fail-over / Redundancy Support
- Real-Time policy enforcement
- No TCP/IP Stack vulnerabilities
- Real-Time logging/audit trail to STS.

5.1.3 SafeNet Soft Remote

SafeNet Soft Remote is the next generation of our award-winning VPN client, extended to include Personal Firewall capabilities and User Authentication through support for industry-standard smart cards. These features are needed to secure "always-on" broadband applications.

- Over 1,000,000 VPN clients installed worldwide
- Support of industry-standard Smart Card User Authentication
- Full-featured Firewall Capabilities to protect against Trojan Horse programs and other malicious code Centralized Management
- Standardized management system
- Ability to customize
- Enhanced Interoperability
- Support for up to 10 Redundant Gateways per connection.

5.1.4 SafeNet/Smart™ Client

SafeNet/Smart is a software product that adds user authentication, cryptographic security and encrypted certificate storage in an application with the extra security of token-based through a smartcard and smartcard reader. The smartcard requires an additional level of input for authorized use. Whether on a LAN or over a WAN, SafeNet/Smart provides easy-to-use software, data encryption, user authentication, and packet authentication for the most demanding implementations.

Features include:

- Desktop and PCMCIA Versions
- DataKey 330, 2048mem, Phillips O/S
- Software encryptor with a smart card reader for smart card user authentication
- Supports Windows operating systems 95, 98, NT Workstation, 2000 Professional, and ME
- Policy downloaded to clients and changed "on-the-fly"
- Auto-download at connection
- Discard all traffic outside tunnel.

Soft Remote provides a personal firewall, which is a completely configurable functionality. This would be configured per the agency's security policy.

Both clients support smartcards.

5.1.5 Standards Compliance

FIPS 140-1

The SafeNet Cryptographic Module, CGX, has been certified through the NIST Cryptographic Module Validation (CMV) program and awarded certificates 91 and 92. All SafeNet products implement this certified module.

IPSec ICSA certified

SafeNet has been an active participant in the ICSA IPSec certification program since its inception. SafeNet participated in the very first Interoperability Bakeoff and continues to attend these technology meetings on a regular basis.

Common Criteria Certification

SafeNet is committed to completing Common Criteria certification and has begun the process with a certified NIAP lab.

Varied client solutions to meet different cost and security needs

The SafeNet product line offers a variety of solutions. These products include bank quality hardware encryption products, smartcard products and low cost software solutions. Security and IT personnel can select from this family of products to meet their unique security and cost requirements and be assured that their solution will be easy to install, support, and manage.

5.2 SafeNet Managed VPN Service Overview

SafeNet's fully managed VPN from the secure operations center includes system configuration, device enrollment, product distribution, security monitoring, network monitoring, full system redundancy, site redundancy, and 24x7 support.

Features:

- Security Policy Definition and Implementation
- User and Product Enrollment
- VPN Product Configuration per customer defined Security Policy
- Initial PIN and PIN Mailer Creation
- VPN Product Distribution to Your Sites
- Secure PIN Mailer Transmittal
- Secure Key and PIN Management
- VPN Event Logging
- Security Alert Notification
- VPN Product Operational Monitoring
- 24x7 Help Desk Support.

The SafeNet managed VPN solution provides a full security monitoring of VPN management systems and full network monitoring of VPN management systems, VPN hardware devices and associated routers. Security monitoring is accomplished via remote monitoring software running between Customer resident SafeNet management systems and vendor facilities through an encrypted tunnel. Network monitoring is accomplished via network monitoring software running at the secure operations center to pre-defined IP addresses assigned to SafeNet equipment (management systems and VPN hardware devices) and other mission critical routers. In the event of security alerts or network interruptions, vendor will immediately escalate to pre-defined contacts provided by the Client.

Monitoring of equipment other than those provided under this section of the Schedule requires the approval of the customer.

A separate router is not required by SafeNet VPN Gateway equipment. AT&T can provide a router as part of its Managed Internet Service connectivity. This router is part of the AT&T service, and is owned, monitored and managed by AT&T.

SafeNet Consultation Services (S/CS) - SafeNet security experts consult with the clients existing personnel to determine enterprise security requirements and craft a basic security policy that factors in SafeNet products as well as identifying what additional resources and infrastructure that may be needed for a successful installation and ongoing support.

5.2.1 SafeNet On-site Support or Installation

SafeNet engineers will visit onsite to an organization to deploy and configure SafeNet products, or assist customers with on-site support, troubleshooting and testing. Installation includes management system install and configuration, device installs and networking installation support as needed.

5.2.2 SafeNet/Maintenance Plus (for product customers without managed service)

Maintenance Plus services include firmware and software updates and upgrades but not enhancements (4.x or dot upgrades), 24-hour hardware repair and/or replacement following equipment receipt, as well as 24x7 telephone support.

5.3 SafeNet Company Overview

SafeNet is a leading developer of technologies for VPNs that include IC's, gateway, server, and client products, centralized management systems, and cost-effective VPN Managed support services. SafeNet has a long history of developing and supporting enterprise scale VPNs on diverse network types through an extensive customer base. The SafeNet technology is quickly becoming the de-facto standard for VPNs in the networking industry. The SafeNet DSP hardware acceleration solution and SafeNet/Soft-PK VPN client have been selected by leading communication companies. SafeNet's solutions are deployed worldwide by many Fortune 1,000 organizations, more than 1,500 banks worldwide, including 13 of the top 15 U.S. banks, as well as top government agencies.

5.4 The AT&T/SafeNet Team Help Desk and Customer Support

The primary point of contact for all service related issues will be handled from the Trusted Services Center (STSC). STSC is a 24x7 manned service center. The STSC facility has full site redundancy in the form of varied connectivity paths from different Internet Service Providers, hardware redundancy (routers and SafeNet equipment) and on site alternate power capabilities provided by a diesel generator. Custom network connections are available and priced separately. All of this is secured in a physically hardened facility that was developed in accordance with Department of Defense directive DoD 5220.22-M as outlined in the National Industrial Security Program Operating Manual. A fully functional disaster recovery site also exists in Boston, MA.

During the primary period of maintenance (PPM) all end users may report problems to through one of these methods:

- By telephone at SafeNet's designated Client Support telephone number, **(410) 931-7520, option 2.**

Customers must furnish a full description of the problem, the conditions leading up to it, and any steps taken to resolve it. Upon the vendor's request, customers must also provide a written problem description and supporting technical information, as required

Client support begins with full security monitoring of VPN management systems (S/SC, S/RED and S/EM) and full network monitoring of VPN management systems, VPN hardware devices and

associated routers. Security monitoring is accomplished via remote monitoring software running between Client resident SafeNet management systems and vendor facilities through an encrypted tunnel. Network monitoring is accomplished via network monitoring software running at vendor to pre-defined IP addresses assigned to SafeNet equipment (management systems and VPN hardware devices) and other mission critical routers. In the event of security alerts or network interruptions vendor will immediately escalate to pre-defined contacts provided by the Client.

Troubles reported from security and network monitoring and all client reported troubles are assigned a "ticket" number and are categorized by severity. Critical problems that prevent the use of SafeNet's or AT&T's products or services receive top priority from vendor's staff.

Support requests are assigned one of three priority levels:

1. **Critical**—problems that preclude use of significant functionality of SafeNet or AT&T products or services in live operations and for which there is no reasonable work-around. This is the highest priority category.
2. **Significant**—problems that preclude use of functionality of SafeNet or AT&T products or services that is significant in live operations, but for which there is a reasonable work-around.
3. **Inconvenient**—problems that do not significantly hinder using SafeNet's or AT&T products or services in live operations. This is the lowest priority level.

Vendor will respond to Client's request for support promptly. "Respond," for this purpose, means that vendor will, within the periods listed in Table A, report back to Client with an assessment or evaluation of the problem. After responding, vendor will take steps to solve the problem as quickly as possible; work diligently until the problem is solved; and provide Client with a diagnosis of the problem and a plan for solving it.

Table A. Response Times

Problem Type	**Time To Respond**	
	During PPM	**After PPM**
Critical	2 hours	4 hours
Significant	4 hours	8 hours
Inconvenient	Next business day	Next business day

Vendor acknowledges its responsibility to work on problems until they are resolved. Customer acknowledges that repair time may vary according to the nature and seriousness of the problems reported, and that no guarantee is made by vendor as to the time within which a resolution will be completed. Vendor may choose to defer resolution of problems that are classified as Significant and/or Inconvenient until the next maintenance release of the specific product is available.

AT&T Managed Security Services - Token Authentication Service
Service Description

6 AT&T Managed Security Services - Token Authentication Service

6.1 General Overview

The Internet is becoming the preferred way to conduct business as it provides a flexible, cost effective way to enable electronic business transactions. Electronic business is helping Government and industry to work more effectively and efficiently, providing broad access to information based assets.

By opening their networks to a variety of remote users (such as mobile and telecommuting employees, business partners, resellers, suppliers, etc.), many organizations risk exposing their valuable, proprietary, and sensitive information. Therefore, Government and industry are calling for better ways to secure the means of authenticating authorized users of networked resources. There is a recognized need to protect data assets through access controls, and designate and control access to proprietary network environments. System administrators who do not monitor, yet have access to, company applications, expose their corporate assets to the risk of unauthorized disclosure and data theft.

One way for Government customers to ensure only authorized users have access to their networks is to make strong authentication an integral part of their security policy. Authentication refers to user identification based on the following:

- Something you know: Password
- Something you have: ID Token, Smart Card, etc.
- Something you are: Biometrics as in thumbprint, voice scan, retinal scan, etc.

Passwords alone may be too weak. Two-factor authentication, using a combination of two out of the three items above, ensures a higher level of securing the process of authentication. The combination of password (something you know) and ID Token (something you have) forms the basis of AT&T's Token Authentication Service offer.

6.2 Service Description

The Token Authentication (TA) service offers AT&T customers with a choice of solutions to enhance the security for authentication to their systems, services, and applications. The service options, as depicted in **Figure 6.2-1,** include:

- Subscription based Token Authentication services
- Turn-key Token Authentication service delivered to the customer.

Managed Token Authentication (TA) Service - Options

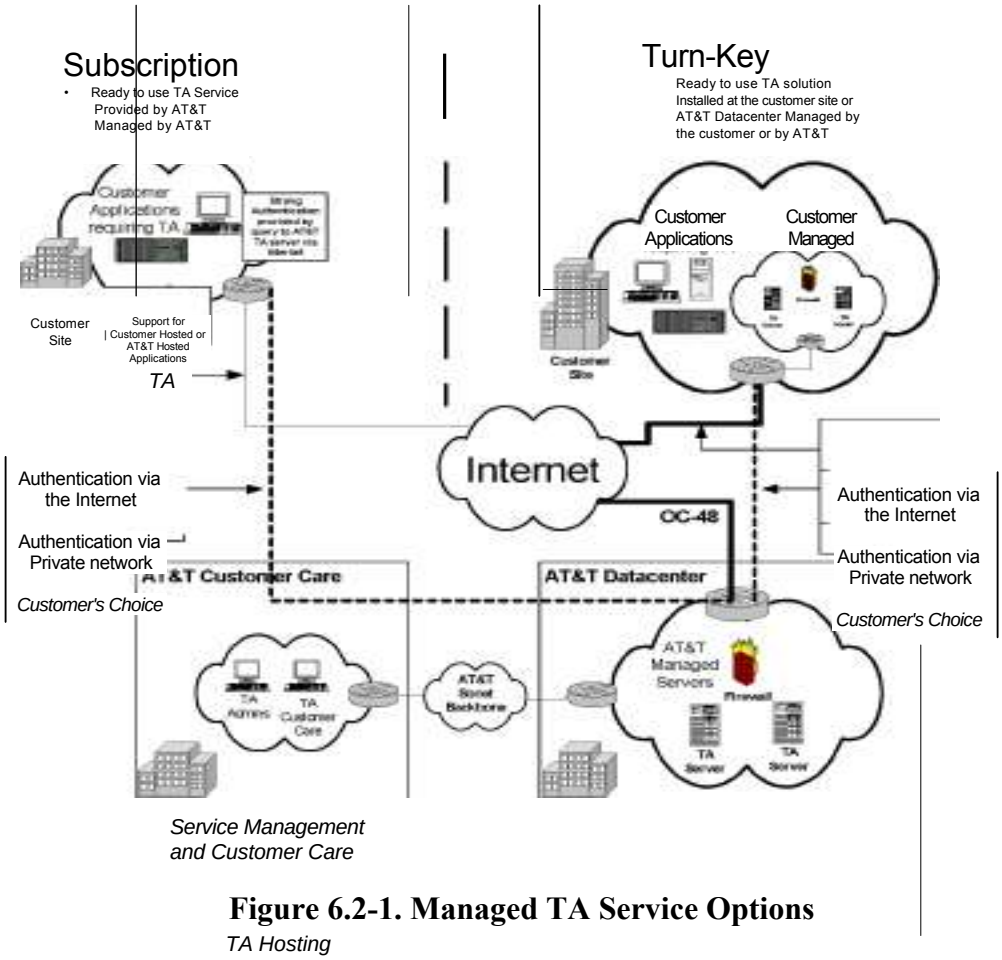

Figure 6.2-1. Managed TA Service Options

The Subscription TA service will make use of an AT&T provided infrastructure that enables strong token authentication services to customers. This service includes a complete package of management services providing the customer with a total outsourced solution for token-based authentication to their systems, services, and applications.

The Turnkey TA service provides the customer with a solution for implementing Token Authentication services within their enterprise. This solution includes the necessary software and hardware needed to implement the TA service augmented with professional services to integrate this service within the customers' enterprise.

6.2.1 Service Components

The diagram below provides a high-level illustration of the TA architecture. This architecture includes the following process sub-system categories, depicted in **Figure 6.2.1-1.**

TA User TA Service Infrastructure	The clients or users of the TA Service. All of the components that make up the infrastructure supporting the TA service. The
TA Enabled Application	customer applications that will make use of the TA service.
TA Service Management	The management infrastructure to support the day to day management of the TA service.

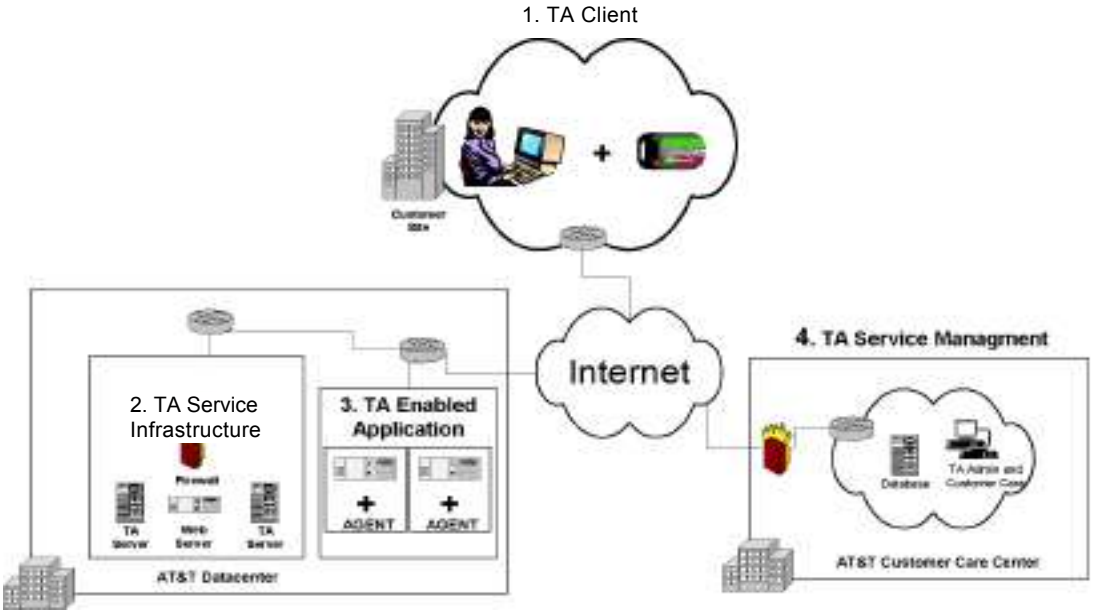

Figure 6.2.1-1. High-Level TA Service Architecture

6.3 TA User

The TA user is the end user (or subscriber) of the TA service. The TA User's organization will register for service with AT&T, after which, the TA User will be provided a Token that will allow access to their TA enhanced application. This service requires agreeing to a license and usage policy as part of the service registration. The license and usage agreement will also be provided. The User will receive instructions on the use of the token.

6.3.1 UserID/PIN

Each TA user must have a UserID and PIN to authenticate to TA-enabled applications. Typically, a user is provided with a temporary PIN upon being issued a token code generator. The user in accordance with the agency's PIN standards can then personalize the PIN.

6.3.2 Token code generator

All TA users will be provided with a keyfob, which will act as a token code generator. A token code generator typically generates a unique 6-digit numerical token code every 60 seconds. This token code is generated using an internal seed unique to the generator and the current Universal Coordinated Time (UCT). The user will provide the token code, along with UserID and PIN, to authenticate to applications. The keyfob is shown in **Figure 6.3.2-1.**

Figure 6.3.2-1. Keyfob - Keyfob that will be used as SecurID Token.

6.3.3 3rd Party Client Software

Depending on the application, a TA user might be required to install client software to authenticate to their application. For instance, to establish a virtual private network (VPN) with a Nortel Contivity VPN Switch, the TA user must authenticate to the switch using the Nortel Extranet Access Client software. This software must be installed on the user's computer and it is the responsibility of the customer to provide any additional client software required to utilize the TA service.

6.4 TA Service Infrastructure

The TA infrastructure includes the secure environmentally protected facility that hosts the service. Also included are the TA servers that provide the authentication services, the Web Server that provides the front-end to the customer, the networks, including a firewall to secure traffic flow, and associated technical administrative support services necessary for providing a robust TA service. Lastly, the TA Service Infrastructure includes connectivity to the Internet for

connection to the TA Users and their applications.

6.4.1 TA Servers

The TA servers are the principal components providing service in support of the TA service. TA servers, along with their accompanying databases, provide a centralized location for managing TA users (User-IDs, PINs and token code generator) and, most importantly, provide the ability to approve or deny user authentication requests from TA-enabled applications.

6.4.2 Customer Web Server

The customer web server provides customers access to information about the service and provide pages for ordering and maintaining their tokens. For example, TA users will access the web server to apply for new token code generators, apply PIN resets, report lost token code generators, and request assistance from customer care representatives.

6.4.3 TA Service Firewall

The firewall deters unauthorized access to the TA Service Infrastructure by allowing only TA components (e.g. TA Server, TA Enabled Applications) running TA specific protocols to access the network.

6.5 TA Enabled Application

A TA Enabled Application is an application that provides the ability for users to authenticate using both PINs and token codes. In general, most applications found in the world today do not provide for token-based authentication inherently. Supplemental software is needed to "TA enable" these applications. The software used to enable applications is an RSA ACE/Agent often referred to as agent software or simply "agent." An ACE/Agent is a computer running Security Dynamics software and connected by a TCP/IP network to a workstation running the RSA ACE/Server.

6.6 TA Service Management

The TA Service Management Center will provide the 24x7 customer care and administration of the TA service infrastructure. This includes the distribution of Tokens and RSA software upgrades and patches to the TA users, the customer care and support of the TA Users, the billing for the TA service, and the day-to-day management and support of the TA service infrastructure. Security mechanisms within the Database will be utilized to separate customer information and prevent unauthorized access.

6.6.1 TA Service Bundles

In order to facilitate the implementation of a TA solution, AT&T provides TA service bundles, which combine all of the elements of the GSA Schedule offer, to meet your agency's specific needs. Please consult your AT&T Sales Representative for further details.

7 SIN 132-51 Labor Category Descriptions

0001: Systems Analyst/Programmer

General Summary

Provides technical support for software development and integration efforts. Performs in a variety of technical areas including systems requirements analysis, data analysis and engineering, systems design, systems development, computer programming, systems testing and deployment, quality assurance, configuration management, and systems documentation. Reports to technical lead for a task or project.

Principal Duties and Responsibilities

Analyzes and develops computer software processing a wide range of capabilities including engineering, business, and records management functions. Develops plans for automated information systems. Analyzes user interfaces, maintains hardware and software performance tuning, analyzes workload and computer usage, maintains interfaces with outside systems, and analyzes proposed system modifications, upgrades and new COTS. Defines the problem and develops system requirements and program specifications. Programmers prepare detailed specifications and computer software programs. Integrates, tests, and debugs software components. Prepares required documentation including program-level and user-level documentation. Enhances existing software systems. May provide technical data base support including: data base design; data integration; data standardization; enterprise-wide data architecture specification; and data base management.

Job Qualifications/Educational Requirements

Bachelor of Science Degree with at least three (3) years experience in analysis and or programming. Four additional years of related experience may substitute for degree.

0002: Senior Systems Analyst/Programmer

General Summary

Provides technical guidance and skills in support of information systems development and integration efforts. Performs in a variety of technical areas including systems requirements analysis, data analysis and engineering, systems design, systems development, computer programming, systems testing and deployment, quality assurance, configuration management, and systems documentation. May serve as a technical lead for a task or project.

Principal Duties And Responsibilities

Provides technical and administrative support for information systems development tasks, including execution of technical tasks, the review of work products for correctness, adherence to the design concept and to user standards, and for progress in accordance with schedules. Coordinates with management staff to ensure problem solution and user satisfaction.

Job Qualifications/Educational Requirements

Bachelor of Science Degree with at least five (5) years experience in analysis and or programming. Four additional years of related experience may substitute for degree.

0003: Principal Engineer/Analyst

General Summary

Provides technical direction and expertise in a variety of specialized areas including information systems engineering, systems architecture, systems integration, telecommunications, systems standards, process engineering, systems design and requirements specification. May serve as technical director or senior technical staff.

Principal Duties And Responsibilities

Responsibilities may include a combination of the following:

1. Establishes system information requirements.
2. Designs architecture to include the software, hardware and communications to support the total requirements.
3. Evaluates and integrates cross-functional requirements and interfaces.
4. Evaluates and defines system requirements.
5. Performs enterprise-wide strategic systems planning.
6. Provides technical and/or subject-matter expertise to project.
7. May supervise technical staff.

Job Qualifications/Educational Requirements

Bachelor of Science Degree with at least seven (7) years experience in analysis and or programming. Four additional years of related experience may substitute for degree. Advanced degree in specialized area may substitute three(3) years experience

0004: Associate Manufacturing Systems Engineer

General Summary

Provides experience with engineering principles and practices as they apply to ADP and or aerospace, space technologies, or manufacturing systems for highly complex products and services. Has general experience in various technical areas. Participates in studies in the areas of Advanced Industrial practices, Sustainment, and Electronic commerce.

Principal Duties And Responsibilities

Responsibilities may include a combination of the following:

(1) Create architecture design to support requirements

(2) Develop test and evaluation criteria

(3) Analyze industrial practices

(4) Performs industrial base analysis

(5) Assists in the planning and assessment of the program.

Job Qualifications/Educational Requirements

Bachelor of Science Degree with at least three (3) years experience in engineering. Four additional years of related experience may substitute for degree.

0005: Senior Manufacturing Systems Engineer

General Summary

Provides experience with engineering principles and practices as they apply to ADP and manufacturing systems for complex products and services. Has extensive experience in determining the ability of assigned equipment and subsystems to meet mission and operational requirement. Conducts studies in the areas of Advanced Industrial Practices, Sustainment, and Electronic Commerce. May serve as technical director or senior technical staff.

Principal Duties And Responsibilities

May include a combination of the following: (1) Establish system requirements (2) Creating architecture design to support requirements (3) Developing test and evaluation criteria (4) Analyze industrial practices (5) Performs industrial base analysis (6) Responsible for planning and conducting state of the art programs (7) May supervise technical staff.

Job Qualifications/Educational Requirements

Bachelor of Science Degree with at least five (5) years experience in engineering. Four additional years of related experience may substitute for degree.

0006: Principal Manufacturing Systems Engineer

General Summary

Provides experience with engineering principles and practices as they apply to ADP and manufacturing systems for highly complex products and services. Has extensive experience in determining the ability of assigned equipment and subsystems to meet mission and operational requirement. Conducts studies in the areas of Advanced Industrial Practices, Sustainment, and Electronic Commerce. May serve as technical director or senior technical staff.

Principal Duties And Responsibilities

May include a combination of the following: (1) Establish system requirements (2) Creating architecture design to support requirements (3) Developing test and evaluation criteria (4)

Analyze industrial practices (5) Performs industrial base analysis (6) Responsible for planning and conducting state of the art programs (7) May supervise technical staff.

Job Qualifications/Educational Requirements

Bachelor of Science Degree with at least seven (7) years experience in engineering. Four additional years of related experience may substitute for degree. Advanced degree in specialized area may substitute 3 years experience

0007: Information Security Analyst

General Summary

Support for Information Security (INFOSEC) and trusted systems technology. Assists in the analysis and definition of security requirements. Assists in the design, development, testing, and documentation of cryptographic products, trusted networks, database management systems and telecommunications subsystems. Researches, drafts, and provides input regarding information security policies, trusted computing base architectures, and security engineering practices and processes. Assist with certifications and accreditation reviews, security test and evaluations, and may draft associated reports.

Principal Duties And Responsibilities

Supports automated information system security engineering tasks which may include policy development, asset and risk assay, development of security specifications/architectures/plans, development and/or installation of digital signature systems, support for key and certificate management, implementation/support of trusted computing base, systems certification and accreditation support, and hands-on development and operation of pilot or prototype information security applications. Provides research and initial input for analysis of the current DoD information security architecture and comparative assessments of alternate approaches. Assists in the design, development, debugging, testing, documentation development and maintenance of computer programs for security applications.

Job Qualifications/Educational Requirements

Bachelor's degree in a relevant technical or a business-related field. Four (4) years experience in Information Security. Experience with at least 2 of the INFOSEC fields of Computer Security, Cryptography, network security, certification/accreditation, and risk analysis. Four additional years of related experience may substitute for degree

0008: Senior Information Security Specialist

General Summary

Senior lead or support for INFOSEC and trusted systems technology. Analyses and defines security requirements. Designs, develops, tests, and documents cryptographic products, trusted networks, database management systems and telecommunications subsystems. Researches, writes, reviews, and makes recommendations regarding information security policies, trusted computing base architectures, and security engineering practices and processes. Conducts

certifications and accreditation reviews, security test and evaluations, and drafts associated reports.

Principal Duties And Responsibilities

Leads or supports automated information system security engineering tasks which may include policy development, asset and risk assay, development of security specifications/architectures/plans, development and/or installation of digital signature systems, support for key and certificate management, implementation/support of trusted computing base, systems certification and accreditation support, and hands-on development and operation of pilot or prototype information security applications. Conducts analysis of the current DoD information security architecture and reports comparative assessments of alternate approaches. Designs, develops, debugs, tests, documents and maintains computer programs for security applications.

Job Qualifications/Educational Requirements

Bachelor's degree in a relevant technical or a business-related field. Six (6) years experience in Information Security. Experience with at least 2 of the INFOSEC fields of Computer Security, Cryptography, Physical/facility, network security, certification/accreditation, risk analysis, disaster recovery planning and execution. Four additional years of related experience may substitute for degree. Advanced degree may substitute for three years of experience.

0009: Principal Information Security Specialist

General Summary

Technical lead for INFOSEC and trusted systems technology. Designs, oversees development and test, and documents cryptographic products, trusted networks, database management systems and telecommunications subsystems. Researches, writes, reviews, and makes recommendations regarding information security policies, certifications and accreditation reviews, security test and evaluation reports, trusted computing base architectures, and security engineering practices and processes.

Principal Duties And Responsibilities

Leads automated information system security engineering tasks which may include policy development, asset and risk assay, development of security specifications/architecture/plans, development and/or installation of digital signature systems, support for key and certificate management, implementation/support of trusted computing bases, systems Certification & Accreditation support, and hands-on development and operation of pilot or prototype information security applications. Conducts analysis of the current DoD information security architecture and reports comparative assessments of alternate approaches. Designs, develops, debugs, tests, documents and maintains computer programs for security applications.

Job Qualifications/Educational Requirements

Bachelor's degree in a relevant technical or a business-related field. Eight (8) years experience in Information Security. Experience with at least 2 of the INFOSEC fields of Computer Security, Cryptography, Physical/facility, network security, certification/accreditation, risk analysis,

disaster recovery planning and execution. Four additional years of related experience may substitute for degree. Advanced degree may substitute for three years of experience.

0010: Senior Engineer/Scientist/Analyst

General Summary

As a Senior Engineer/Scientist/Analyst, the incumbent will work in an engineering or scientific environment focusing on engineering and/or scientific studies and analysis or hardware or software design. This includes aerospace and space technologies, information or communication systems.

Principal Duties And Responsibilities

Supports programs with exceptional creativity and resourcefulness in the most demanding and complex assignments. Performs analyses and develops recommendations that may impact acquisition programs and activities. May provide technical direction or perform complex analyses. May provide design, implementation, testing services for complex engineering and scientific systems.

Job Qualifications/Educational Requirements

Bachelor of Science Degree with at least five (5) years experience in engineering or analysis. Four additional years of related experience may substitute for degree.

0011: Principal Staff Scientist/Engineer/Analyst

General Summary

Provides advanced technical support to national level programs regarding ADP and IS programs and systems.

Principal Duties And Responsibilities

Supports programs with exceptional creativity and resourcefulness in the most demanding and complex assignments. Performs analyses and develops recommendations that may have substantial impact of national defense programs and activities. Usually provides critical technical direction or performs critical analyses.

Job Qualifications/Educational Requirements

Bachelor of Science Degree with at least seven (7) years experience in analysis and or engineering. Four additional years of related experience may substitute for degree. Advanced degree in specialized area may substitute 3 years experience

0012: Senior Corporate Consultant

General Summary

Provides consulting and executive support to national level defense programs and personnel.

Principal Duties And Responsibilities

Provides executive knowledge and insight on national issues. Performs analyses and develops recommendations that may have substantial impact of national programs and activities.

Job Qualifications/Educational Requirements

The Senior Corporate Consultant will have a Master's degree from an accredited college or university and a minimum of ten (10) years of progressively more difficult analytical and/or technical experience. Four additional years of related experience may substitute for degree.

0013: Telecommunications Technician

Job Qualifications/Educational Requirements

The telecommunications technician will be a high school graduate and have a minimum of four (4) years experience in installation, repair, and maintenance of electronic computer based. Two

(2) years of the required experience will be in the direct testing, evaluation and quality assurance of data networks.

0014: Network Engineer

Job Qualifications/Educational Requirements

The Network Engineer will have a Bachelor's degree in Engineering, Computer Science or equivalent advanced degree from an accredited college or university and a minimum of three (3) years of progressively more difficult analytical and/or technical experience performing systems analysis on network information systems. Four additional years of related experience may substitute for degree He or she will be capable of working at the highest technical level of all phases of applications systems analysis activities and/or network systems engineering. He or she will possess substantive knowledge of analytical techniques, be skilled in collecting and manipulating data from various sources and be skilled in using structured analytical methods.

0015: Network Architect

Job Qualifications/Educational Requirements

The Network Architect will have a Bachelor's degree in Engineering, Computer Science or equivalent advanced degree from an accredited college or university and a minimum of seven (7) years of progressively more difficult analytical and/or technical experience performing systems analysis on network information systems. Four additional years of related experience may substitute for degree. He or she will be capable of working at the highest technical level of all phases of applications systems analysis activities and/or network systems engineering. He or she will possess substantive knowledge of analytical techniques, be skilled in collecting and manipulating data from various sources, and be skilled in using structured analytical methods.

0016: Network Consultant

Job Qualifications/Educational Requirements

The Network Consultant will have a Bachelor's degree in Engineering or Computer Science from an accredited college or university and a minimum of ten (10) years of progressively more difficult analytical and/or technical experience performing systems analysis on network information systems. Four additional years of related experience may substitute for degree He or she will be capable of working at the highest technical level of all phases of network systems engineering activities. He or she will possess substantive knowledge of analytical techniques, be skilled in collecting and manipulating data from various sources, and be skilled in using structured analytical methods.

0017: Technology Updates Applications Support Technician

Job Qualifications/Educational Requirements

The applications support technician will be a high school graduate with a minimum of five (5) years experience in software operation support. Two (2) years of the required experience will be in the software production environment.

0018: Technology Updates Applications Systems Analyst

Job Qualifications/Educational Requirements

The application systems analyst will have a Bachelor's degree in Engineering or Computer Science from an accredited college or university and a minimum of three (3) years of progressively more difficult analytical and/or technical experience performing systems analysis on telecommunications systems. Four additional years of related experience may substitute for degree He or she will be capable of working at the highest technical level of all phases of applications systems analysis activities.

0019: Supplemental PKI Services Applications Support Technician

Job Qualifications/Educational Requirements

The applications support technician will be a high school graduate with a minimum of five (5) years experience in software operation support. Two (2) years of the required experience will be in the software production environment.

0020: Supplemental PKI Services Applications Systems Analyst

Job Qualifications/Educational Requirements

The application systems analyst will have a Bachelor's degree in Engineering or Computer Science from an accredited college or university and a minimum of three (3) years of progressively more difficult analytical and/or technical experience performing systems analysis on telecommunications systems. Four additional years of related experience may substitute for degree He or she will be capable of working at the highest technical level of all phases of applications systems analysis activities. He or she will possess substantive knowledge of analytical techniques, be skilled in collecting and manipulating data from various sources, and be skilled in using structured analytical methods.

0021: PKI Professional Consultant

Job Qualifications/Educational Requirements

The application systems analyst will have a Master's degree in Engineering or Computer Science from an accredited college or university and a minimum of eight (8) years of progressively more difficult analytical and/or technical experience performing systems analysis. Four additional years of related experience may substitute for degree. The PKI Professional Consultant provides a broad perspective and experience to the overall PKI pilot implementation effort. The PKI Professional Consultant will be consulted to review and advise on the technical approach to assure the solution for each agency application will provide a realistic perspective for the Client's applications.

0022: Forms Designer

Job Qualifications/Educational Requirements

The application systems analyst will have a Bachelor's degree from an accredited college or university and a minimum of three (3) years of progressively more difficult analytical and/or technical experience performing systems analysis on telecommunications systems. Four additional years of related experience may substitute for degree The Form Designer shall have extensive experience with forms design and development software, as well as programming languages and protocols used by such software, in order to enable them to rapidly design, build and test form layout. As well, Form Designers shall implement presentation logic, and simple business rules in programming language and protocols to generate application ready forms. The Forms Designer shall have the resources required to convert the paper forms to internet ready forms. This includes implementing the data validation, as well as formatting and other presentation logic. The Forms Designer shall also be responsible for implementing changes as identified during the user acceptance testing of the forms. The Forms Designer shall be required to convert specified Government forms to internet ready forms as indicated in specific ACES task orders.

0023: E-Commerce Forms Consultant

Job Qualifications/Educational Requirements

The E-Commerce Forms Consultant will have a Master's degree from an accredited college or university and a minimum of five (5) years of progressively more difficult analytical and/or technical experience performing systems analysis. Four additional years of related experience may substitute for degree. The E-Commerce Forms Consultants shall have extensive experience with the Internet forms design, development and integration software, programming languages and protocols. These languages and protocols shall include Java or C, and the E-Commerce Forms Consultant shall have experience with a variety of databases. This experience must enables them to manipulate forms with Java or C API, to integrate forms with databases, and to develop web ready solutions using servlets, CGIs, etc.

0024: Forms System Security Architect

Job Qualifications/Educational Requirements

The Forms System Security Architects will have a Master's degree from an accredited college or university and a minimum of seven (7) years of progressively more difficult analytical and/or

technical experience performing systems analysis. Four additional years of related experience may substitute for degree. The Forms System Security Architects shall have extensive experience with forms design development and security products, and shall be able to implement a full range of forms security solutions. The Forms System Security Architect shall provide specialized knowledge on integrating Internet forms and products with other technologies; some examples might be workflow, encryption, or other third party integrations. The Forms System Security Architect shall be responsible for designing and developing a new transmit and save format that utilizes the server's public key for encryption. Included here shall be the creation of an encryption protocols such as IFX (written in C), as well as documenting the form changes required to implement the encryption methods.

0025: Forms Project Manager

Job Qualifications/Educational Requirements

The Forms Project Manager will have a Master's degree from an accredited college or university and a minimum of ten (10) years of progressively more difficult analytical and/or technical experience performing systems analysis. Four additional years of related experience may substitute for degree. The Forms Project Manager shall confirm requirements with the customer, internally manage forms design, development and security resources assigned to the ACES engagement, and shall work to ensure an integrated solution is achieved. The Forms Project Manager shall provide knowledge related to forms design and development products, past solutions that have been successfully implemented, and timelining and planning resources for projects.

The Forms Project Manager shall work with customers to refine and confirm requirements, to coordinate the activities of teams in different locations, and to build plans and provide regular status reports on progress. The Forms Project Manager shall be responsible for forms integration coordination, and user acceptance testing coordination.

0026: Forms Management Consultant

Job Qualifications/Educational Requirements

The Forms Management Consultant will have a Master's degree from an accredited college or university and a minimum of twelve (12) years of progressively more difficult analytical and/or technical experience performing systems analysis. Four additional years of related experience may substitute for degree. The Forms Management Consultant shall be provided as necessary to advise the Project Manager in legal, regulatory, and risk management best practice issues that arise from the development and deployment of the application. The Forms Management Consultant shall also be the liaison with legal counsel as appropriate to address policy issues. In addition, the Management consultant shall assist in the development of any necessary policy and practice documentation. The Forms Management Consultant shall have extensive expertise in E-Commerce legislation and regulations related to the use of electronic signatures and records.

0027: Task Order Project Manager

Job Qualifications/Educational Requirements

The Task Order Project Manager will have a Bachelor's degree from an accredited college or university and a minimum of three (3) years of progressively more difficult analytical and/or technical experience. Four additional years of related experience may substitute for degree. The

Task Order Project Manager will be the single point of contact for the task order. This is not to restrict interaction with the technical team supporting this task order. Rather the Task Order Project Manager will retain responsibility for the final performance under the task order. The Task Order Project Manager will work with the Client Project Manager to assure Client's requirements are met. The Task Order Project Manager will assure resources and schedule are allocated appropriately. The Task Order Project Manager will be responsible for assuring all task order deliverables are provided and all meetings are conducted in accordance with the task order. The Task Order Project Manager will participate in final review of task order deliverables to assure the project serves the interests of the Client and meets the requirements of the task order.

0028: Technical Project Lead

Job Qualifications/Educational Requirements

The Technical Project Lead will have a Bachelor's degree from an accredited college or university and a minimum of five (5) years of progressively more difficult analytical and/or technical experience. Four additional years of related experience may substitute for degree. The Technical Project Lead will work with the Task Order Project Manager to assure all technical aspects of the task order are conducted. The Work Breakdown Schedule (WBS) will be maintained by the Technical Project Lead in accordance with the terms of the task order to assure the Project Plan accurately reflects work being performed and correctly reflects the teams status relative to schedule. This person will support reports (teleconferences and meetings) with the Client regarding progress of the task order. Otherwise, the Technical Project Lead will primarily interface internally to the AT&T technical team and assure sound technical decisions are made as the task order enters various phases. The Technical Project Lead will participate in final review on the task order deliverables to assure the information is presented in a rational, sound, and organized manner.

0029: Technology Advisor

Job Qualifications/Educational Requirements

The Technology Advisor will have a Bachelor's degree from an accredited college or university and a minimum of eight (8) years of progressively more difficult analytical and/or technical experience. Four additional years of related experience may substitute for degree. The Technology Advisor provides a broad perspective and experience to the effort. As needed, the Technology Advisor will be consulted to review and advise on the technical approach to assure the solution will provide a realistic perspective for the Client.

0030: Information Systems Analyst

Job Qualifications/Educational Requirements

The Information systems analyst will have a Bachelor's degree from an accredited college or university and a minimum of five (5) years of progressively more difficult analytical and/or technical experience performing systems analysis. Four additional years of related experience may substitute for degree. In early phases of the task order, the Information Systems Analyst will work directly with the Client to gather relevant information associated with Client applications to be studied under this task order. This person will study provided materials and interface with the Client applications' Subject Matter Experts (SMEs) to isolate relevant parameters, characteristics, and other information associated with user authentication and transactions. This

member of the technical team will spend a significant amount of time on-site at the Client's offices, particularly in the early phases to accomplish this task.

In later phases of the task order, the Information Systems Analyst will work with the Technology Research Specialist to merge the collected information with industry best practices metrics to:

- Tailor the System Vulnerability Analysis (SVA) process methodology to Client's needs
- Apply the methodology and metrics to the Client's applications
- Create relevant aspects of the task order deliverables to include the Preliminary Report, the Draft Final Report, and the Final Report.

0031: Technology Research Specialist

Job Qualifications/Educational Requirements

The Technology Research Specialist will have a Bachelor's degree from an accredited college or university and a minimum of five (5) years of progressively more difficult analytical and/or technical experience performing systems analysis. Four additional years of related experience may substitute for degree. In early phases of the task order, the Technology Research Specialist researches industry best practices relevant to electronic transactions, user authentication. This research will include security risks, industry best practices for selection criteria, evaluation methodology, and cost factors. In later phases of the task order, the Technology Research Specialist will work with the Information Systems Analyst to merge the collected information with the Client's application specific requirements to:

- Tailor the SVA process methodology to the Client's needs
- Apply the methodology and metrics to the Client's applications
- Create relevant aspects of the task order deliverables to include the Preliminary Report, the Draft Final Report, and the Final Report.

Naturally, the Technology Research Specialist and the Information Systems Analyst will need to work closely throughout the task order execution to assure relevant information is gathered and analyzed.

0032: Systems Security Engineer

Job Qualifications/Educational Requirements

The Systems Security Engineer will have a Bachelor's degree from an accredited college or university and a minimum of seven (7) years of progressively more difficult analytical and/or technical experience performing systems analysis. Four additional years of related experience may substitute for degree. The Systems Security Engineer will work with both the Information Systems Analyst and the Technology Research Specialist to formulate and document the application examples of the Client's applications. In early phases of the task order, the Systems Security Engineer will work on conceptual models of transaction models and characterization of the models. Later phases of the task order will focus on applying these models to the specific applications the Client has requested for analysis.

0033 Customer Service Representative

Job Qualifications/Educational Requirements

Duties: Provides customer service support by answering telephone inquiries from customers on various topics. Greet and provides information to the customer in a pleasant, courteous and professional manner. Asks pertinent questions to determine customers needs. Provides customer with requested information or direct customer to appropriate resource. Performs administrative tasks as assigned. This function requires keyboarding and data entry skills.

The data must be entered precisely, in the proper fields, properly spaced, spelled, punctuated and formatted. Must follow the local guidelines governing how data is to be keyed in. Assist supervisor in training junior personnel. Act as alternate for supervisor. Perform administrative tasks as assigned.
Qualifications: High School diploma, 45 WPM typing skills, excellent English grammar skills and ability to follow written instructions. At least two years of customer service experience required.

0034: Video Teleconferencing Communications Technician

Job Qualifications/Educational Requirements
The video teleconferencing communications technician will be a high school graduate and have a minimum of four (4) years experience in installation, repair, and/or maintenance of electronic computer based equipment. The technician will be involved in the operation of multipoint control units (MCU), inverse multiplexers (IMUX) and digital cross-connect systems. The technician will key cryptographic equipment as required.

0035: Network Operations Manager

Job Qualifications/Educational Requirements
The Network Operations Manager will have a Bachelor's degree from an accredited college or university and a minimum of three (3) years of experience in managing facilities responsible for the installation, repair and/or maintenance of electronic computer-based equipment. Four additional years of related experience may substitute for degree. The Network Operations Manager will be the single point of contact for network operations issues.

0036: Network Operations Supervisor

Job Qualifications/Educational Requirements
The Network Operations Supervisor will have a Bachelor's degree from an accredited college or university and a minimum of two (2) years of experience in managing facilities responsible for the installation, repair and/or maintenance of electronic computer-based equipment. Three additional years of related experience may substitute for degree. The Network Operations Supervisor will provide data on network operations issues.

0037: Task Order Project Supervisor

Job Qualifications/Educational Requirements
The Task Order Project Supervisor will have a Bachelor's degree from an accredited college or university and a minimum of two (2) years of progressively more difficult analytical and/or technical experience. Three additional years of related experience may substitute for degree. The Task Order Project Supervisor will support all initiatives under a task order. The Task Order Supervisor will work with the Client Project Manager to assure Client's requirements are met.

The Task Order Project Manager will monitor resources, schedule and billing initiatives. The Task Order Project Manager will participate in project meetings and monitor deliverables. The Task Order Project Supervisor directly supports the Task Order Project Manager.

0038: Associate Systems Analyst/Programmer

General Summary

Provides technical support for software development and integration efforts. Performs in a variety of technical areas including systems requirements analysis, data analysis and engineering, systems design, systems development, computer programming, systems testing and deployment, quality assurance, configuration management, COTS evaluation, systems integration, and systems documentation.

Principal Duties and Responsibilities

Reports to technical lead or Senior Systems Analyst/Programmer for a task or project. Analyzes information requirements. Evaluates problems of workflow, organization, and planning. Helps develop plans for automated information systems from project inception to conclusion. Defines the problem and develops system requirements and program specifications. Provides technical support in any one or more of the following: preparation of technical specifications; testing and integration of system components; development and programming of system components; data base engineering and management; systems support and enhancements; preparation of technical documentation.

Job Qualifications/Educational Requirements

Bachelor's Degree, or equivalent experience, in Information Systems Engineering, Computer Science, Engineering or Business, or other related field. Years of experience: Minimum one year.

0039: Documentation/Administration Support Specialist

General Summary

Supports documentation preparation and administrative support efforts. Prepares technical Automated Data Processing documentation in accordance with applicable Government and industry standards. Supports Program or Project Manager administration efforts.

Principal Duties and Responsibilities

Gathers, analyzes, edits, and prepares technical information. Conducts research and ensures the use of proper technical terminology and documentation standards. Translates technical information into readable documents. Assists in the preparation of presentation graphics and supports the development of contract deliverables and reports. Supports administrative contract documentation preparation including resource files, correspondence, schedules and travel documentation.

Job Qualifications/Educational Requirements

Associate Degree, Technical/trade School, or equivalent experience. Years of experience: Minimum one year.

0040: Junior Technical Writer

General Summary

Prepares support documentation and technical and operations manuals for selected systems and networks, including related hardware and software. Works closely with customers to insure complete and accurate system descriptions and required operating procedures are properly captured.

Principal Duties and Responsibilities

Write technical materials and manuals. Write documentation, operator manuals, and checklist procedures for hardware and software systems. Analyze requirements for needed documentation and completeness. Ensures that technical subject materials are presented clearly and succinctly.

Job Qualifications/Educational Requirements

Previous customer related experience and one year technical writing experience required. Bachelor's degree or equivalent experience in a technical or writing field, including operational experience required. Good oral skills, excellent writing skills, and team skills are required. Experience and fluency in standard office software, including MSWord and MSOffice is required. Years of experience: Minimum one year

0041: Training Support Specialist

General Summary

Supports systems management effort and enables user maintenance for version releases. Prepares technical Automated Data Processing documentation in accordance with applicable Government and industry standards.

Principal Duties and Responsibilities

Supports Program or Project Manager efforts via curriculum creation, update, training and analysis. Gathers, analyzes, edits, and prepares system/course training information with system application team and Program Manager. Conducts necessary research and ensures the use of proper systems and documentation standards. Evaluates curriculum requirements and user needs ensuring operational requirements are met. May prepare summaries of analysis and/or assist in the preparation of presentation graphics. Supports the development of contract deliverables and reports. Supports administrative contract documentation preparation including resource files, correspondence, schedules and travel documentation.

Job Qualifications/Educational Requirements

Business Degree, or BA in education/training management with up to 7 years experience in application or system supported. Education requirement may be waived by demonstration of practical experience in field or system (at least 3 years in specialty application).

0042: Junior System Analyst

General Summary

Prepares technical support for software development, integration, and test efforts. Tasks include requirements analysis and documentation, limited programming and data analysis, software testing and hardware installation. Other tasks include troubleshooting, quality assurance, and software documentation. Works closely with customers.

Principal Duties and Responsibilities

Assists in analyzing requirements and developing software solutions. Assists with data collection, retrieval, downloads and related functions and processes. Assists in developing data flows, flowcharts, and required documentation. Assists in the performance of stand-alone software testing. Assists with system integration and test functions.

Job Qualifications/Educational Requirements

Associate Degree, Technical/trade School, or equivalent experience. Years of experience: Minimum one year.

0043: Staff Logistician/Mid-level

General Summary

A member of the technical staff who supports the development of acquisition logistics support documentation such as Integrated Logistics Support Plans, Logistics Support Analysis, and Maintenance Plans. Familiar with requirements of an ILS office, depot maintenance planning, and support and inventory management

Principal Duties and Responsibilities

Has hands-on experience developing and reviewing acquisition and logistics documents. Performs logistical analyses and develops recommendations that may impact the acquisition and support of space related systems and programs. Will support development of a wide range of logistics support documentation.

Job Qualifications/Educational Requirements

Associate Degree, Technical/trade School, or equivalent experience. Minimum of 10 years relevant experience, including three years of experience as a logistician within a program or organization in a DOD environment. Must possess good oral and written communication skills for direct client interface.

0044: Senior Logistician

General Summary

A member of the technical staff who supports the development of acquisition logistics support documentation such as Integrated Logistics Support Plans, Logistics Support Analysis, and Maintenance Plans. Familiar with management requirements of an ILS office, depot maintenance planning, and support and inventory management.

Principal Duties and Responsibilities

Has hands on experience developing and coordinating review of acquisition and logistics documents. Performs logistical analyses and develops recommendations that may impact the acquisition and support of space related systems and programs. Will perform varied logistics and general acquisition support tasks including LSA policy formulation, ILS program implementation, configuration management, etc.

Job Qualifications/Educational Requirements

Associate Degree, Technical/trade School, or equivalent experience. Minimum of 12 years relevant experience, including three years of experience as a senior logistician within a program

or organization in a DOD environment. Must possess good oral and written communication skills for direct client interface.

Managed (R)egistered e-Mail Service Description

8 Managed (R)egistered e-Mail

8.1 Service Description

(R)egistered e-Mail reduces business risk by increasing accountability for important electronic communications. (R)egistered e-Mail allows the e-mail sender to prove what was sent, when it was sent, whether it was delivered, and when it was delivered and accepted. This proof is in the form of an electronic receipt, which is returned to the sender in a counterfeit-proof form and can be authenticated at any time. The (R)egistered e-Mail system allows authentication of the receipt without requiring any third-party to retain any information about the e-mail.

The receiver is aware that the sender has proof of the delivery and content of the e-mail communication. Immediately upon receipt of a (R)egistered e-Mail, the receiver is alerted in the inbox that the e-mail has been registered, and once again when they open the e-mail. The receiver is notified but not required to respond in any special way. In addition, at any time in the life of the Registered e-Mail, the receiver can authenticate content, attachments, origin, and time sent. The combination of actual proof and awareness of this indisputable record of the e-mail and transmission creates accountability.

(R)egistered e-Mail can protect the Government in any dispute questioning whether or not the interested parties have been properly notified. It provides proof of delivery status for required alerts and regulated notifications. This proof of delivery can be authenticated in case of a dispute questioning notification, and is an instant, low-cost solution bringing accountability.(R)egistered Receipts can be returned to the senders of electronic submissions providing the sender with the proof of submission, official times of submission, and proof of content submitted in the hands of the sending party. Any party, in the case of a dispute or question, can authenticate this receipt at any time. The sending party is protected with verifiable proof that they retain. The Government agency is protected because these receipts cannot be counterfeited or altered without detection and the Government agency does not need to retain a copy of this receipt.

Official Registered e-Mail, a sister service, helps protect information from inadvertent disclosure under Freedom of Information Act requests.

AT&T Government Markets Enterprise Management System Service Description

9 AT&T Government Markets Enterprise Management System Service (AGMEMS)

9.1 AT&T Government Markets Enterprise Management System Service (AGMEMS) Introduction

The AT&T Government Markets Enterprise Management System (AGMEMS) is an enterprise management platform, comprising best-in-class commercial enterprise management software, enhanced by AT&T-developed middleware, customization, and productivity enhancement tools, that monitors and maintains networks and IT environments. Because AT&T does the hard work of integrating, testing, and configuring these tools throughout the life-cycle, our customers can devote more of their resources to the needs of their mission. AGMEMS is referred to as a platform because it performs functions across many of the traditional enterprise management areas, such as fault, performance, configuration and security management. AGMEMS has been customized specifically for US Government customer premise use.

AGMEMS can efficiently scale from small missions to large Government enterprises, including support for both SNMP and non-SNMP devices. At its core, AGMEMS is comprised of best-in-class commercially developed software applications. AT&T-developed "middleware" integrates core commercial products to deliver a cohesive, end-to-end management platform that has the look and feel of a single software solution.

In many cases, due to security requirements, Government customers require that their outsourced enterprise management platform physically reside on their premises. AGMEMS Right to Use (RTU) licensing provides this capability to Government customers. AGMEMS may be licensed as a custom turnkey platform for customers with new missions; or, for customer environments that already use HP *OpenView* and *Remedy* ARS/Helpdesk, customers need only purchase the AGMEMS middleware license.

This service description covers the AGMEMS middleware. With the purchase of the AGMEMS middleware license, the Government customer receives installation CDs and manuals from AT&T. The Government customer is responsible for providing the required commercial hardware and software to interoperate with AGMEMS middleware. Upon request, AT&T will provide a list of that hardware and software. Government customers must provide a web browser to access AGMEMS and must configure AGMEMS for their own use. Support for AGMEMS installation and turn-up is available at an additional charge as part of Professional Services available under AT&T's GSA Schedule 70, Special Item Number 132-51.

9.2 AT&T Government Markets Enterprise Management System Service (AGMEMS) Product Overview

AGMEMS may be licensed in several configurations:

- AGMEMS Standard
- AGMEMS Short-Stack

- AGMEMS Lite
- AGMEMS custom.

AGMEMS Standard

AGMEMS Standard is a completely customizable enterprise management solution that includes the management of not only networks, but also computers, applications, and security devices (e.g., crypto, IDS, firewall) used by Government customers to deliver IT services. Unlike some management systems that simply react following the occurrence of a problem or failure, AGMEMS Standard is proactive and predictive, allowing customers to detect service-affecting problems before they occur.

The AGMEMS Standard architecture makes use of published Application Programmer Interfaces (APIs) provided by best-in-class tool vendors. This approach enables tight integration of asset (Remedy), event (HP), and ticketing (Remedy) databases using the AT&T-provided middleware. This integration enhances the operation of these tools by:

- Automating the transfer of data between tools
- Providing menu-driven or graphical front-ends to these tools
- Enabling easier provisioning
- Presenting the look and feel of a single system.

AT&T developed the middleware and also supports it throughout the contract life-cycle.

The net benefit of the AGMEMS Standard middleware is reduced staffing and extensive capabilities to provision and operate the platform and to manage the enterprise, enabling customers to focus more resources on their mission. The AGMEMS Standard open architecture also enables AT&T to add new tools or upgrade existing tools with minimal development effort since vendor APIs' are usually stable across software releases.

AT&T understands that the nature of the government work often requires the management platform to be continuously available, even after a disaster strikes. Therefore, AT&T offers AGMEMS Disaster Recovery (DR). AGMEMS DR is a replica of AGMEMS Standard (i.e., includes all AGMEMS Standard middleware), but is available to Government customers at half the Non-Recurring Charge (NRC) and Monthly Recurring Charge (MRC). AGMEMS DR is available once one AGMEMS Standard middleware license has been acquired by the customer, and can be installed at the same location where AGMEMS Standard resides or at an alternate location.

AGMEMS Short-Stack and AGMEMS Lite

AGMEMS Short-Stack and AGMEMS Lite contain a subset of AGMEMS middleware and commercial tools. These tools are used in conjunction with a full AGMEMS system for special situations where enterprise elements at different security levels are to be managed. Short-Stack and Lite systems are deployed on lower security networks, and the full AGMEMS system is deployed at the highest security level network. These configurations feature a one-way physical communication path between the low and high networks that provide data security and integrity.

This arrangement has several benefits including:

- More cost effective than replicating full systems on all networks
- Enables the full AGMEMS system to provide end-end service views and ticketing across different security domains.

AGMEMS Lite supports environments that comprise SNMP-capable devices, while AGMEMS Short-stack supports SNMP and non-SNMP devices, applications and systems.

AGMEMS Custom

AT&T can also provide custom configurations as an optional professional service, in response to the unique customer requirements. Custom solutions may include integrating commercial tools that are not part of the AGMEMS Standard configuration or developing additional middleware features or special tools.

9.3 AT&T Government Markets Enterprise Management System Service (AGMEMS) Value- Added and Key Differentiators

Extensive AT&T investment and a dedicated development staff have yielded an integrated management solution providing high degree of functionality, control and flexibility. AGMEMS middleware provides complete and focused management of the enterprise resources that impact customer mission delivery. Through integration of operations systems (e.g., fault, ticketing, service level reporting) across traditionally "silo" management functional areas, as well as automation of typically manual tasks, customers quickly realize improved operational efficiency and cost savings. The following is an in-depth discussion of some key differentiators that make AGMEMS unique among COTS-only solutions.

Databases are Tightly Integrated

Central to AGMEMS integration of disparate IT management functions is the storage of real-time event data, Remedy trouble ticketing data and AGMEMS asset data in a common, open data repository. A single, open data repository allows for a standard means of data query (i.e., APIs, SQL), quick access, analysis, reporting of data, and ease of maintenance.

AT&T-developed AGMEMS middleware fully integrates event, ticket, and asset data to allow for automated and highly coupled interfaces across the fault and configuration management areas, as well as problem management (i.e., trouble diagnosis and resolution) and service level reporting. AGMEMS middleware allows for custom defined integration points and data dependencies that go beyond capabilities available with commercial tools. Automated creation and population of tickets with real-time event data, for instance, is contingent not simply on receipt of events for devices defined in AGMEMS' asset database, but also on the state of the managed asset (e.g., "deployed", "on order", "maintenance", etc.). Further, events received against an asset for which a ticket has already been created result in appending the event to the existing ticket rather than creating new tickets.

Maps Driven by Asset and Ticketing Databases

AGMEMS provides visual tools that aid operations associates in detecting and assessing enterprise problems. In addition, service-level map views allow for quick analysis on the impact infrastructure failures have on delivering service to end-users.

In addition to standard *OpenView* NNM network topology maps, AGMEMS maintains custom topology maps within NNM that are populated based on assets (hardware and software) defined in AGMEMS' asset database. A typically manual process to build custom maps in NNM is enhanced by an AGMEMS middleware capability that automatically builds and populates custom topology maps as assets are added to AGMEMS' asset database. AGMEMS custom maps extend the content of NNM topology maps beyond IP-based network elements to include non-IP-based elements (such as OS or application software) and server sub-components (such as disk, memory, CPU, etc). Other non-IP network elements common to Government enterprises, such as cryptos, legacy circuit switches, sensors, and satellite equipment, may be included on AGMEMS maps through the asset database.

The hierarchy of AGMEMS custom topology maps is driven by the flexible component/sub-component relationships of assets defined in AGMEMS' asset database. The operational status of AGMEMS map elements - depicted using a color-coded severity scheme - is driven by the severity of tickets generated against map elements. An element for which a ticket has been created maintains its color-code severity state on the map until the ticket is cleared. This feature eliminates the "blinking light" effect, caused by intermittent failure conditions.

AGMEMS also provides the capability to logically group devices and applications into a service-level view of an enterprise. For example, a logical association tree can be created for a web-based service that shows the hierarchical relationships between the service functions (e.g., a web search engine) and the underlying physical or software assets that operate in support of the function (e.g., router, computer server, search engine software, etc). Status changes propagate upwards to indicate the impact to a top-level service when an asset experiences problems or fails.

Easy-to-use forms are provided to build mission views from the AGMEMS asset database. These forms provide as much as a five-to-one increase in efficiency over manually creating the views through XML coding.

Forms to Simplify Creation and Maintenance of Assets

A host of customized forms are available for populating and maintaining the AGMEMS' asset database. It is the asset database where the lifecycle begins for all managed assets within the AGMEMS management framework. From the initial ordering and acquisition phases, throughout an asset's operational lifespan to retirement, details are maintained on the attributes, operational status (e.g., deployed, maintenance) and repair history of assets.

The forms for administering AGMEMS' asset database provide great flexibility for classifying and defining assets. Both hardware and software-based assets can be defined, including their associated components, to a level of granularity necessary to meet operational needs. For instance, a server can be defined to include physical subcomponents, such as disks, CPUs, or NICs, as well as software subcomponents, such as OS or application processes. The AGMEMS asset database contains pointers to software images (residing on source-code control systems or software distribution systems) that allow software to be tracked throughout the enterprise. Asset

definition to the subcomponent level allows for the generation of real-time fault events and ticket creation at the lowest level, thus further assisting operators in root cause analysis and fault recovery.

For many common asset types (e.g., servers, switches, routers), AGMEMS asset forms also provide pull-down menus that offer a list of at-a-glance performance reports. The AGMEMS middleware automatically provisions the performance management software suite to poll the elements and generate the reports. This capability eliminates the need to manually provision reports, reducing the operations workload.

Automatic Ticket Creation in Response to Real-time Events

AGMEMS automatically generates tickets and pre-populates them with attributes of root-cause information (e.g., effected mission asset(s), severity, problem description). Its workflow engine will route tickets to the appropriate support person or group. Beyond the use of initial assignment to mission staff, the ticketing process is an essential means for tracking progress made by staff in resolving outstanding problems and disseminating status to others with a need to know. Archived ticket data also helps in performing trend analysis to identify mission assets or subcomponents with significant problem history, as well as to track key workflow metrics (such as mean-time-to-respond or mean-time-to-resolve).

Monitoring workflow metrics play an integral role in re optimizing the workflow execution process. AGMEMS provides a number of standard reports that track workflow performance. Custom reports may also be defined by agencies and provided at an additional charge.

Mission resources (i.e., staff) defined within AGMEMS' ticketing subsystem can be logically grouped according to a number of criteria, including expertise, job function, work shift, geographic location, time zone, etc. Tickets can also be prioritized and escalated in accordance with organizational policy.

Asset Event Filtering

AGMEMS employs a number of mechanisms to consolidate real-time events for managed assets and filter spurious, non-critical events (i.e., alarms) that can distract operators from the true cause of failures. For instance, tickets in AGMEMS are automatically created upon the receipt of an event for an asset, when no active event already exists for the same asset. All succeeding events received for the asset - if configured to trigger ticket creation/update - are appended in chronological order to the "Work Log" portion of the open ticket. This way multiple tickets are not created on the same problem asset, allowing the overall number of tickets to be kept to a minimum. With fewer tickets to respond to, problem solving is streamlined and simplified.

AGMEMS allows targeted control over exactly which events can trigger the creation or update of tickets, in such a way that non-critical events can be sorted from meaningful, significant events and excluded altogether from the ticket "Work Log".

Automation Tools

Many provisioning tasks in the underlying commercial tools are automated by AGMEMS

middleware to reduce risks of error and speed completion. Examples of these automated tasks include:

- SNMP event handling tool - This tool simplifies the Open View configuration procedure to accept and translate SNMP traps. A single, intuitive AGMEMS configuration file allows for flexible trap identification and handling. Steps to create and upload trap templates into HP Openview Operations (OVO) are completely automated.
- Forms to create/maintain mission views vs. software development - Easy-to-use forms are provided to build XML-based mission views in HP OVO. Parent/child relationships are easily defined by components from the AGMEMS asset database through convenient pull-down menus.

Web Portal

Regardless of user function, all personnel gain access to AGMEMS using the application's web-based portal. Government customers access their AGMEMS web portal through web browsers on their private intranet. Users provide a valid and unique account/password combination to request access, and are in turn granted a set of defined authorization rights based on role within the application (e.g., associate, administrator, client). Role-based rights within AGMEMS ensure that authorized users have access to the applications and tools necessary to fulfill their responsibilities, and gain no more access than what is required.

AGMEMS' web portal serves as a centralized "launch pad" for all AGMEMS applications/tools. Once logged on, all application/tools available to the user are listed in the left-hand side navigation plane, and the user only needs to point and click application icons in order to launch the application.

9.4 AT&T Government Markets Enterprise Management System Service (AGMEMS) Product Support

AT&T is committed to supporting the AGMEMS Standard, Short-Stack, and Lite products and continually enhancing its capabilities. New technologies are constantly evaluated to extend AGMEMS capability and functionality. AT&T maintains world-class development and systems engineering organizations to support AGMEMS research initiatives. Laboratory facilities with the latest network and computing equipment, as well as expert resources are available to the AGMEMS research and development team. This team applies AT&T and industry best practices to evaluate, prototype, and test proposed technology enhancements.

AT&T supports the ongoing tasks associated with maintaining and upgrading sophisticated software-based COTS products and middleware that comprise the AGMEMS platform. Tasks that typically require enterprises to maintain entire organizations of highly skilled software developers and engineers are off-loaded to AT&T, enabling customers to focus on executing their missions. AT&T generally produces three major releases of AGMEMS per year, including one release that incorporates the latest versions of the underlying COTS products.

Technical support is provided Monday-Friday from 8:00 AM to 8:00 PM (EST) to assist on-site system administrators in trouble shooting AGMEMS. The contact information for technical

support will be provided when the AGMEMS licenses are purchased. AT&T provides the following technical support functions for life cycle maintenance and support:

- Centralized requirements/development and testing of all new tool releases - By performing rigorous testing and evaluation in a laboratory environment, the implementation time and risk associated with production rollout is minimized.
- Requirements pooling - AGMEMS Standard, Short-Stack, and Lite middleware is enhanced in concert with regular releases of vendor software and middleware. Release features are derived from multiple client requirements. To keep the base platform feature set constant across all customers, new features are available to all Government customers at no additional charge.
- Software control of COTS and middleware - AT&T incorporates software configuration control for all vendor software and AT&T middleware. AT&T uses a regular release schedule to incorporate new features into the platform. These new features may comprise new vendor software releases or new AT&T middleware features. In the unlikely event that a software patch is required to the platform, AT&T provides strict configuration control of these patches and includes them in the next standard release.
- COTS tool version control - AT&T keeps track of all AGMEMS vendor software releases. New releases of vendor software are tested rigorously in the lab before being incorporated into an AGMEMS release.

9.5 AT&T Government Markets Enterprise Management System Service (AGMEMS) Summary

AGMEMS enhances the productivity of industry-leading COTS enterprise management tools with middleware and customizations that exploit our almost 40 years of automated network management experience. AT&T's dedicated integration, development, life-cycle, and operations support teams have the single goal of enabling our customers to focus their resources on accomplishing their missions. By taking the responsibility of operating, maintaining and enhancing the enterprise network management platform, AT&T enables Government customers to conduct their missions more effectively and efficiently.

AT&T Government Solutions
Single-Site Local Area Network (LAN)
Internet Protocol (IP) Telephony Service

10 AT&T Government Solutions Single-Site Local Area Network (LAN) Internet Protocol (IP) Telephony Service

10.1 Service Overview

AT&T Single-Site LAN IP Telephony Service is a premises-based service for a customer-managed IP Telephony (IPT) Service at a single site*. This service provides design, procurement and deployment of an IP based LAN Telephony Service for customers who want this service to be deployed at a single site. The customer will perform the on-going management of this service. The customer may, however, choose to contract with AT&T for maintaining the on-site equipment. AT&T may provide the maintenance service with the assistance of its hardware vendor partners. Another service is on-site training to assist agencies with managing the IPT equipment and service on an ongoing basis.

* Site is defined as: a customer environment that is contained either within a single building or a single campus.

10.1.1 Benefits of the Service

The AT&T Single Site LAN IP Telephony Service provides Government Agencies an easy path of transition from a legacy PBX based voice infrastructure to a more flexible, state of the art IP based LAN Telephony Service. AT&T is a world leader in IP Telephony and has significant expertise in designing and deploying LAN IP Telephony infrastructure. The service enhances employee productivity, as well as, positions agencies to be able to meet future growth requirements with a scalable solution that incorporates productivity enhancing features.

10.1.2 Customer Pre-requisites

In order for the Single Site LAN IP Telephony Service to be fully integrated with existing customer infrastructure, AT&T will perform an on-site survey to determine existing equipment and deployment. Any inconsistencies that are discovered at this stage will be reflected in the design of the solution to ensure that the service can operate successfully when deployed.

10.1.3 Availability

This service will be only available in CONUS.

10.2 SLAs/Warranties

Consistent with its GSA Schedule Contract No., GS-35F-0249J, AT&T proposes its GSA Schedule customers a warranty of merchantability only. There will be no performance SLAs that are applicable to this service since it will be managed by the customer on an ongoing basis.

10.3 Service Description

1. Design

The AT&T Single Site LAN IP Telephony Service will be designed by AT&T to meet the following criteria for Government agencies including. The criteria are listed below:

A. Strong Security Functionality: The service will be designed to ensure adherence to individual agency requirements.
B. Open Systems Architecture: The service will provide a standards based design and solution that will meet standards for Gateways, Ethernet trunking, Directory Access and Power over Ethernet.
C. Simple and Functional Interface: The AT&T designed system that will provide an intuitive end user interface such that end users will be able to use the system with minimal training.
D. Facilitate Full Business Office Capability: The service is designed to provide to deliver a traditional "PBX-like" feature set in a cost effective manner.

2. Equipment Provided as Part of the Service

AT&T will provide all equipment needed for the service. The equipment can include any of the following components:

A. LAN switches: LAN switches provide connectivity within the campus. Switches can provide in-line power via the Power-Over-Ethernet feature to devices that support the feature, including phones. Switches may also serve as gateways.

B. Gateway Devices: Access gateways (Analog, Digital PRI and T1 CAS) can be implemented in a stand-alone fashion or as a blade of a switch or router.

C. Call Processing Systems: A current version and the prior release (N-1) of the Cisco Call Manager will be supported as part of the offer.

D. Transcoders/Conference Bridges: Transcoders to convert codecs and conference bridges will be supported as part of the standard services Hardware conference bridges support non G.711 codecs. The supported components may be used as transcoders and conference bridges (among the DSP resources) and will be supported as part of the offer. Call Manager Conference software bridges will also be supported as part of the offer.

E. Digital PBX adapters: Digital PBX Adapters (DPA) allow integration of legacy voice mail devices with Cisco Call Manager and IP Phones.
F. Phones: A variety of Cisco IP Phones are supported.

3. Deployment: Deployment services are all the activities related to the installation and activation of the service. Activities include:

A. Project Management is a single point of contact that manages the entire project from inception to cutover to customer management.

B. Site Audit is the high level survey of customers existing infrastructure for Wired LAN and IP Telephony. Detailed Network Assessments are available as a Professional services engagement.

C. Design and Engineering is the complete design and engineering necessary to plan the

deployment of the service.

D. Staging is the pre-configuration of all equipment prior to shipment.

E. Shipping is the delivery of all staged equipment necessary to deploy the Service to the appropriate customer site.

F. Installation is the connecting, setting into position, and preparing for use of all shipped equipment necessary for deploying the Service.

G. Configuration includes all onsite activities required for setting up the environment so the Service may be properly delivered.

H. Test and Turn up are the activities required to ensure that the customer's operating centers can "view" the equipment and are receiving signals to indicate the equipment is in working order.

4. Training: Administrative and End-User training is part of the AT&T Single-Site LAN IP Telephony Service solution. One (1) day (eight (8) hours) of Administrative training and two (2) hours of End-User training is required per site using the proposed professional services labor category for training.

5. Maintenance: AT&T will provide Maintenance on a 24x7 basis. Repair times will vary by the type of equipment.

10.4 Detailed Feature List for Supported Equipment

Feature
Add on Module to Telephone Set
Answer and answer release
Auto answer
Automatic Call Distribution (ACD) and all associated features
Bearer Channel Encryption
Call coverage
Call forward-all (off net and on net)
Call forward-busy
Call forward-no answer
Call hold and retrieve
Call park and pickup
Call pickup group-universal
Call status per line (state, duration, number)
Call waiting
Callback busy, no reply to station
Calling Line Identification (CLID)
Calling Line Identification Restriction call by call (CLIR)
Calling party name identification (CNID)
Date & Time
Direct inward dial (DID)
Direct outward dial (DOD)
Directories-missed, placed, received calls list stored on selected IP phones
Directory dial from phone-corporate, personal
Display
Distinctive ring per phone, per line appearance, on net vs. off net
Drop last conference party (ad-hoc conferences)
Extension Mobility Support
Group paging via the speaker phone
Hands-free, full-duplex speakerphone
Headset/Hearing Aid Compatible
Hotline/Ring Down
Hunting (multiple types)

Feature
Hypertext Markup Language (HTML) help access from phone
IEEE standard 802.3af inline power support
Intercept
Intercom
Message waiting indication
Multiple line appearances per phone
Mute capability from speakerphone and handset
Name Display
Night Service
On-hook dialing
Operator attendant- Attendant Console (and all associated features)
Paging
Privacy
Privacy Release
Real-time QoS statistics via screen display on phone or through HTTP browser to phone.
Recall
Recent dial list-Calls to phone, calls from phone, autodial, and edit dial
Redial
Reinstate (Puts IP phone back in service after a logoff)
Release - Headset ACD phones
Secure telnet support (SSH)
Speed Call, System
Speed dial-Multiple speed dials per phone
Station to Station Calling
Station volume controls (audio, ringer)
Two to Six Way Call
Transfer (also used with consultation hold)
Uniform Call Distribution (UCD) (and all associated features)
Voice Call (announce call)
Summary of Admin Features
Access control logging, access levels

Feature
Active directory
Alarm Management/System Diagnostics
Application discovery and registration to an SNMP management
Authorization Codes
Automated phone moves
Automatic Call Distribution (and all associated features)
Call detail records (CDRs)
Call forward reason code delivery
Call-by-call CLID restriction
Centralized, replicated configuration database, distributed Web-based management viewers
Class of Service
Database
Database automated change notification
Debug information to common syslog file
Device addition through wizards
Device groups and pools for large system management
Device mapping tool-IP address to Media Access Control (MAC) address
Device-downloadable feature upgrades-Phones, hardware transcoder resource, hardware conference bridge resource, VoIP gateway resource
Dialed number identification service (DNIS)
Dialed number translation table (inbound and outbound translation)
Device groups or pools for large system management
Dynamic Host Configuration Protocol (DHCP) block IP assignment-Phones
Enhanced 911 service
Extended Markup Language (XML) API into IP phones (as appropriate)
IPMA application (supporting non-shared line configurations)
JTAPI 1.2 or higher computer telephony interface

Feature
Least Cost Routing
H.323-compliant interface to H.323 gateways, and gatekeepers
Intrusion Detection or Intrusion Protection
Lightweight Directory Access Protocol (LDAP) directory interface to selected contractor's LDAP directories
Make Busy Station/Trunk/Route
Malicious Call Trace
MGCP signaling and control to selected contractor VoIP gateways
Music On Hold
Native supplementary services support to H.323 gateways
Off-Premise Extension
Outgoing Trunk Queuing
Paperless phone DNIS-Display-driven button labels on phones
Performance-monitoring SNMP statistics from applications to SNMP manager or to operating system performance monitor
QoS statistics recorded per call
Route Restriction
Select specified line appearance or specified phone to ring
Sortable component inventory list by device, user, or line
Station-to-station callback on busy subscriber, callback on no reply
System event reporting-to common syslog or operating system event viewer
TAPI 2.1 or higher computer telephony interface
TDD/TTY support using G.711
Traffic Statistics
VMS Voice Mail Integration

10.5 Professional Services

The service bundle includes professional services to assist with implementation of the service. The professional services are priced at the rates found in this GSA Schedule. The following labor categories are utilized as part of the service bundle:

Description	*GSA Schedule 70 Labor Categories*
Equipment Staging, Configuration and Testing	0011 - Principal Staff Scientist/Engineer/Analyst 0003 Principal Engineer/Analyst,
Equipment Installation, and Integration with GFE (including VMS)	0011 - Principal Staff Scientist/Engineer/Analyst 0003 Principal Engineer/Analyst, 0004 Associate Manufacturing Systems Engineer
Testing and Documentation	0011 - Principal Staff Scientist/Engineer/Analyst 0003 Principal Engineer/Analyst , 0004 Associate Manufacturing Systems Engineer
Training	0011 - Principal Staff Scientist/Engineer/Analyst 0003 Principal Engineer/Analyst

10.6 AT&T Government Solutions Enhanced Single-Site Local Area Network Internet Protocol (IP) Telephony Service

10.6.1 Service Overview

The AT&T Enhanced Single-Site Local Area Network Internet Protocol (IP) Telephony Service provides an enhanced premise-based solution that includes design, procurement, deployment and enhanced on-site maintenance to meet the high availability requirements of customers. This enhanced service will also provide increased capacity, reliability, redundancy and "presence" capabilities. These presence capabilities will allow increased productivity for users who will be able to share their availability to communicate and the preferred way to communicate whether it be in the office or at a virtual office number.

Customers may purchase the Enhanced Single-Site Local Area Network Internet Protocol (IP) Telephony Service in several ways. It may be purchased as a stand-alone solution or as an add-on to the Standard Single-Site Local Area Network IP Telephony Service for enhanced features and functionality.

For this service the customer will perform the daily, operational and on-going management of the service. However, to assist customers in the on-going management of their solution, AT&T's enhanced service can provide on-site training of the customer's staff to assist agencies with the ongoing management of the IP Telephony equipment and service.

AT&T provides the Enhanced Single-Site Local Area Network IP Telephony Service with a one-time, non-recurring charge for design, procurement, configuration, deployment /installation, Test & Turn-up as well as the enhanced 12-month on-site maintenance service to meet the high availability requirements of customers.

Training for Administrators and/or End Users is also available as part of the AT&T Enhanced Single-Site Local Area Network Internet Protocol (IP) Telephony Service solution. Training is available at an additional charge using the proposed professional services labor category for training.

10.6.2. Benefits of the Service

The enhanced service helps insure agencies can implement an advanced IP Telephony solution that integrates with their existing PBX equipment. This approach helps to preserve the investments in existing equipment, while migrating to IP Telephony with minimal risk. Additional benefits of the solution are:

- Enhanced employee productivity with flexible, productivity enhancing features and functionality
- Meet future communications growth needs with an industry leading technology foundation architecture that can grow to support collaboration applications

The AT&T Enhanced Single-Site Local Area Network Internet Protocol (IP) Telephony Service also provides high availability through maintenance of the service for the client, allowing the client to focus on its core business mission, while allowing AT&T to focus on the technical issues of designing, deploying and maintaining its IP telephony solution.

10.6.3 Customer Pre-requisites

To help insure that the Enhanced Single-Site Local Area Network Internet Protocol (IP) Telephony Service is fully integrated with the existing client infrastructure, AT&T will perform an on-site survey to determine existing equipment, LAN environment and network architecture. This information will then be utilized to develop the service design, procurement and deployment plan.

10.6.4 Availability

This service is only available in CONUS.

10.6.5 SLAs/Warranties

Consistent with its GSA Schedule Contract No., GS-35F-0249J, AT&T proposes its GSA Schedule customers a warranty of merchantablity only. There are no performance SLAs that are applicable to this service since it will be managed by the customer on an ongoing basis.

10.6.7 Service Description

10.6.7.1. Design

The Enhanced Single-Site Local Area Network Internet Protocol (IP) Telephony Service will be designed by AT&T to meet the following criteria for Government agencies:

Strong Security Functionality: The service will be designed to ensure adherence to individual agency requirements. Security is based upon the Cisco AVVID architecture. AT&T can provide security services to assess the agency network and provide security consulting services at an additional charge to the government. Please consult your AT&T Sales Representative regarding security requirements for your agency.

Open Systems Architecture: The service will provide a standards based design and solution that will meet standards for Gateways, Ethernet trunking, Directory Access and Power over Ethernet.

Simple and Functional Interface: The AT&T designed solution will provide intuitive end user interface to enable use of the system with minimal training.

Facilitate Full Business Office Capability: The service is designed to deliver enhanced, PBX feature set that is flexible and adaptable to end user requirements.

10.6.7.2 Equipment Provided as Part of the Service

AT&T will provide all equipment needed for the service. The equipment can include any of the following components:

A. LAN Switches to provide connectivity within the campus.
B. Gateway Devices:
C. Call Processing Systems:
D. Transscoders/Conference Bridges:
E. Digital PBX adapters: Digital PBX Adapters (DPA) allow integration of legacy voice mail devices with Cisco Call Manager and IP Phones.
F. Analog Gateways
G. Phones: A variety of Cisco IP Phones are supported.
H. Paging System

10.6.7.3 Deployment Plan and Services

The Deployment Plan and Services includes the detailing of all the activities related to the installation and activation of the service.

Project Management: Provides a single point of contact that manages the entire project from

inception to cutover to customer management.
Site Audit: A high level survey of the customer's existing infrastructure for Wired LAN and IP Telephony. NOTE: Detailed Network Assessments are available as a Professional Services Engagement

Design and Engineering: Includes the design and engineering necessary to plan the deployment of the service.

Staging: AT&T will provide pre-configuration of all equipment prior to shipment.

Shipping: All preconfigured equipment will be shipped to the appropriate customer location or site.

Installation: AT&T will set into position, connect and prepare for use all pre-configured equipment that has been shipped.

On-site Configuration: Includes setting up the environment or equipment onsite necessary to deliver the solution.

Test and Turn-up: Testing and other activities will be conducted to ensure that the customer's environment is working properly and the customer's operating centers can view the equipment and are receiving signals to indicated the equipment is in working order.

10.6.7.4 Administrator and End User Training

Training of an Administrator per site can be provided to transition the solution to the customer for on-going management. End-User training per site, if required, can also be provided to assist end users in becoming familiar with the enhanced features and functionality of the service including the presence and collaboration capabilities. The Administrator and End-User Training is available using the proposed professional services labor category for training. If the agency requires this training, please contact AT&T for further information.

10.6.7.5 Maintenance

AT&T will provide maintenance services for the solution per site. The repair times will vary by type of equipment and the client's desired mean time to repair. The following maintenance hours and mean time to repair (MTTR) options are available:

Option 1 - 24 x 7, 4 Hour Mean Time To Repair (MTTR)
Option 2 - 8 AM to 5 PM, 4 Hour MTTR
Option 3 - 8 AM to 5PM, Next Business Day MTTR

Maintenance for the initial 12-month period after installation is included in the prices shown in the pricing shown on the Internet Telephony pricing page. Maintenance for additional 12-month periods will be at an additional chage as shown on the Internet Telephony pricing page.

10.6.8 Detailed Feature List for Supported Equipment

Transfer (also used with consultation hold)
Uniform Call Distribution (UCD) and all associated features
Voice Call (announce call)
Summary of Administrative Features
Active Directory
Alarm Management/System Diagnostics
Application Discovery and registration to an SNP management
Authorization Codes
Automated phone moves
Automatic Call Distribution (and all associated features)
Call Detail records (CDRs)
Call Forward reason code delivery
Call-by-call CLID restriction
Centralized, replicated configuration database, distributed Web-based management viewers
Class of Service
Database
Database automated Change notification
Debug information to common syslog file
Device addition through wizards
Device groups and pools for large system management
Device mapping tool-IP address to Media Access Controls (MAC) address
Device-downloadable feature upgrades-Phones, hardware transcoder resource, hardware conference bridge resource, VoIP gateway resource
Dialed number identification service (DNIS)
Dialed number translation table (inbound and outbound translation)
Device Groups or pools for large system management
Dynamic Host Configuration Protocol (DHCP) block IP assignment-Phones
Enhanced 911 Service if requested
Extended Markup Language (XML) API into IP phones (as appropriate)
IPMA application (supporting non-shared line configurations)
JTAPI 1.2 or higher computer telephony interface
Least Cost Routing
H323 - compliant interface to H323 gateways and gatekeepers
Intrusion Detection or Intrusion Prevention
Lightweight Directory Access Protocol (LDAP) directory interface to selected contractor's LDAP directories
Make Busy Station/Trunk/Route
Malicious Call Trace
MGCP signaling and control to selected contractor VoIP gateways
Music on Hold
Native supplementary services support to H323 gateways
Off-Premise Extension
Outgoing Trunk Queuing
Paperless phone DNIS-Display-driven button labels on phones
Performance-monitoring SNMP statistics from applications to SNMP manager or to operations system performance monitor
QOS statistics recorded per call
Route restriction
Select specified line appearance or specified phone to ring
SIP - compliant interface to SIP gateways and gatekeepers (Session Initiation Protocol)
Storable component inventory list by device, user or line
Station -to-Station call back on busy subscriber, callback on no reply
System event reporting-to common silo or operations system event viewer
TAPI 2.1 or higher computer telephony interface
TDD/TYY support using G.711
Traffic Statistics
VMS Voice Mail Integration
Add on Module to Telephone Set
Answer & answer release
Auto Answer

Automatic Call Distribution and all associated features
Bearer Channel Encryption
Call Coverage
Call forward all (off-net & on-net)
Call Forward-busy
Call forward-no answer
Call hold and retrieve
Call park & pickup
Call pickup group-universal
Call status per line (state, duration, number)
Call waiting
Callback busy, no reply to station
Calling Line Identification (CLID)
Calling Line Identification Restriction call by call (CLIR)
Calling party name identification (CNID)
Date & Time
Direct Inward dial (DID)
Direct Outward dial (DOD)
Directories-missed, placed, received calls list stored on selected IP Phones
Directory dial from phone-corporate, personal
Display
Distinctive ring per phone, per line appearance, on net vs. off-net
Drop last conference party (ad-hoc conferences)
Extensions Mobility Support
Group paging via the speaker phone
Hands-free, full-duplex speakerphone
Headset/Hearing Aid Compatible
Hotline/Ring Down
Hunting (multiple types)
Hypertext Markup Language Help access from phone
IEEE Standard 802.3af inline power support
Intercept
Intercom
Message with waiting indication
Multiple line appearances per phone
Mute capability from speakerphone and handset
Name Display
Night Service
On-hook Dialing
Operator attendant-Attendant Console (and all associated features)
Paging
Privacy
Privacy Release
Real-time QoS statistics via screen display on phone or through HTTP browser to phone
Recall
Recent dial list-Calls to phone, calls from phone, autodial, and edit dial
Redial
Reinstate (Puts IP phone back in service after a logoff)
Release - Headset ACD phones
Secure Telenet support (SSH)
Speed Call, System
Speed dial-Multiple speed dials per phone
Station to Station calling
Station volume controls (audio ringer)
Two to Six Way Call

10.6.9 Service Size Options

The Enhanced IP Telephony Service provides three configuration options, (Small, Medium and Large) to meet the needs of particular types of customers. See pricing for the specifics of the service

size option details.

10.6.10 Professional Services

The service bundle includes professional services to assist with implementation of the service. Training services are also available for assisting and preparing the client to assume the on-going management of the solution. These professional services are priced at the rates found in this GSA Schedule. The following labor categories are utilized as part of the service bundle:

Description	GSA Schedule 70 Labor Categories
Equipment Staging, Configuration and Testing	0011 - Principal Staff Scientist/Engineer/Analyst 0003 Principal Engineer/Analyst *0028 Technical Project Lead*
Equipment Installation, and Integration with GFE (including VMS)	0011 - Principal Staff Scientist/Engineer/Analyst *0002 Senior Systems Analyst/Programmer* 0003 Principal Engineer/Analyst, 0004Associate Manufacturing Systems Engineer *0006 Principal Manufacturing Systems Engineer*
Testing and Documentation	0011 - Principal Staff Scientist/Engineer/Analyst 0003 Principal Engineer/Analyst
Training	0011 - Principal Staff Scientist/Engineer/Analyst 0003 Principal Engineer/Analyst

10.6.11 Service Pricing

Customers must receive a quote from their AT&T Sales Representative for this service. The quote will include a non recurring charge for the equipment and maintenance of the service as shown on on the Internet Telephony pricing page, hi addition, the quote will include charges for support based upon the labor category descriptions and rates in this GSA Schedule as shown in Section 9 of this service description. Inside wire can be included in the quote, if desired.

AT&T Custom Managed Virtual Private Network Service (CM-VPNS)

11 AT&T Custom Managed Virtual Private Network Service (CM-VPNS)

11.1 CM-VPNS Service Description

11.1.1 Overview

The AT&T Custom Managed VPN Service (CM-VPNS) is a service that provides an enterprise-wide and custom managed Virtual Private Network (VPN) solution to deliver secure remote access connectivity to the primary and back-up Data Centers of a Government agency. CM-VPNS is a fully managed solution that includes supporting services, hardware platforms, and network transport, namely:

- VPN hardware;
- VPN Client
- Wide Area Network (WAN) circuits;
- Dial client;
- Managed Intrusion Detection Service (MIDS) at Data Centers; and
- 24X7 management from the dedicated Network Operations Center (NOC) based in Oakton, Virginia (with its back-up in Middletown, New Jersey.)

CM-VPNS can apply rigorous policies and practices to adhere to an agency's security requirements. The CM-VPNS architecture is designed to provide a managed VPN solution to support multiple levels of redundancy, both within and across Data Centers.

11.1.2 Service Architecture

The CM-VPNS architecture of a secure, custom managed VPN solution is based on Internet Protocol Security (IPSec) Triple Data Encryption Standard (3DES) VPN connections through the AT&T Managed Internet Services (MIS) wide area network. The solution utilizes a dual Hub and Spoke architecture connecting the agency's remote fixed sites to its two Data Centers (Primary and Back-up) via T1, Fractional T1 (FT1) and broadband connections.

The agency's remote fixed sites will access the agency's secure, internal network via AT&T MIS reached through dedicated links (Fractional T1 or T1), AT&T DSL Internet Service, or a third party DSL or Cable provider. The agency's remote end users will gain access to the agency's secure, internal network by utilizing AT&T's Business Internet Service (BIS) for dial-up access, AT&T DSL Internet Service for Broadband DSL connectivity, or a third party DSL/cable provider. AT&T MIS and BIS are built on AT&T's World class IP backbone.

The diagram below **(Figure 11.1.2-1)** represents the topology for the fully functional CM-VPNS

solution. In this solution, AT&T will manage the designated components of an agency's CM-VPNS service at the remote fixed sites as well as its two Data Centers. This design provides a Government agency with a comprehensive turnkey managed solution. AT&T will provide the following components:

- VPN hardware and LAN switches for the remote fixed sites and the two Data Centers
- Layer 3 switches at the two Data Centers
- VPN Client software and AT&T Dialer software for remote end users
- Intrusion Detection Systems at the Data Centers
- Integrated T1 WAN interfaces on VPN router for T1 and FT1 access
- Standalone DSL modem at broadband fixed sites
- WAN access for the remote sites (MIS, DSL)
- WAN access for the remote end users (BIS, DSL)
- WAN access for the Data Centers (MIS DS3 or OC-x)
- Monitoring and management of the AT&T supplied components - 24x7:
  - This includes logging, reporting and analysis.
  - Maintenance of all AT&T supplied devices and circuits.

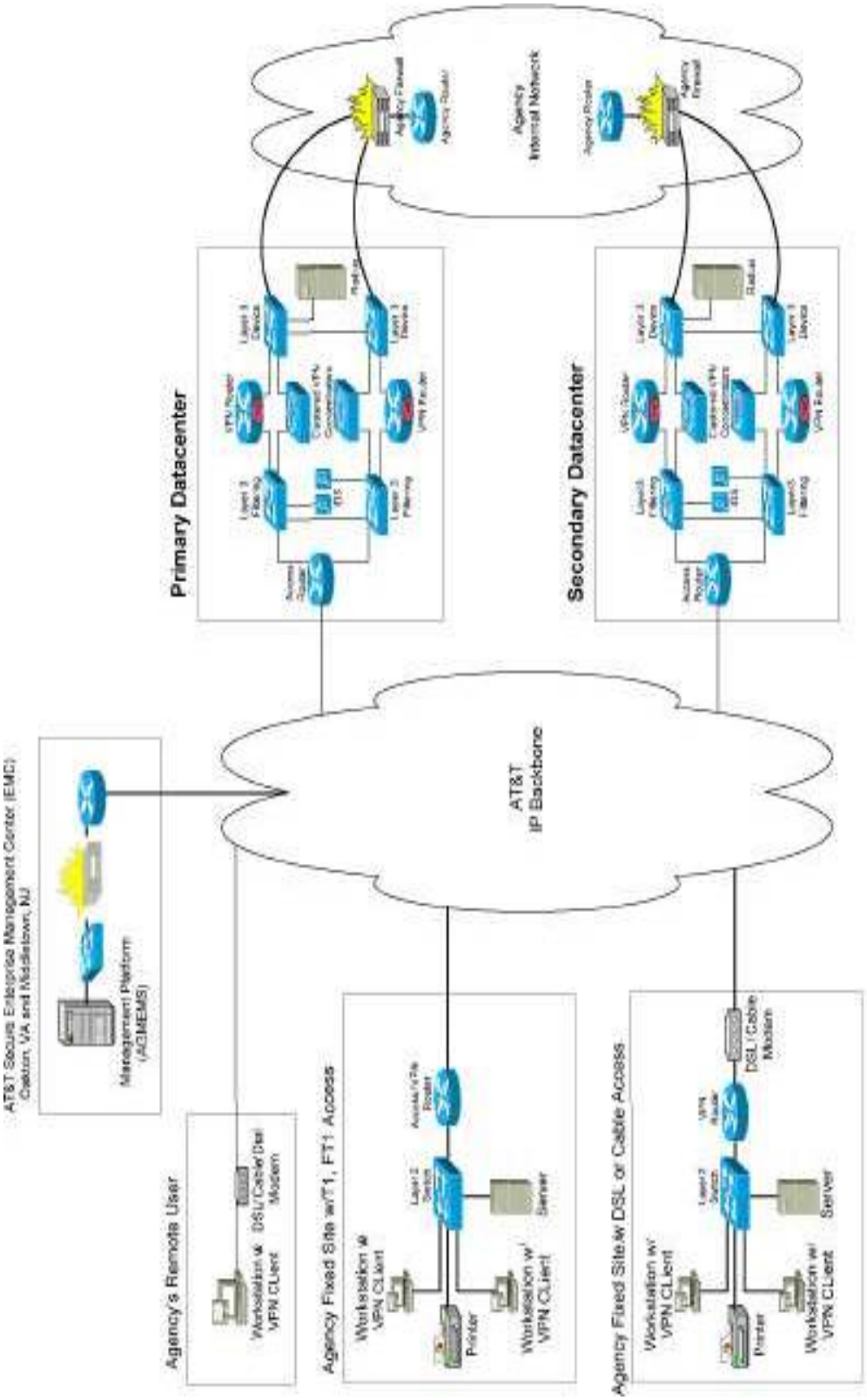

Figure 11.1.2-1. AT&T CM-VPNS Architecture

11.1.3 Features and Capabilities

11.1.3.1 Fixed Site Access

A fixed site is classified as 1 to 200+ users connected to a LAN located at either an agency or a supplier facility. The AT&T CM-VPNS will provide connectivity from these fixed sites to each of the agency's two Data Centers (Primary and Back-up) through Internet-based VPNs. Internet access is provided either by the AT&T MIS for sites requiring dedicated access or by broadband (DSL) service provided by AT&T. The Data Centers will be provisioned with AT&T DS3 or OC-x MIS circuits to support the anticipated VPN traffic. This design will enable each of the agency's Data Centers to support the agency's VPN community in the event of a failure at one of them.

Each remote fixed site will have a primary and secondary IPSec tunnel to the agency's Data Centers. In the event that one of the Data Centers becomes unavailable, the VPN platform at the fixed site will dynamically fail over to the secondary tunnel, which is connected to the agency's alternative Data Center. This will ensure continuation of operations for remote fixed sites. Figure 1.1.3.1-1 provides an architecture overview of the fixed site design.

The fixed sites of AT&T CM-VPNS are grouped into three categories based on size:

- Small fixed site: 1 to 20 users;
- Medium fixed site: 21 to 100 users;
- Large fixed site: 100+users.

If the end user is located at a fixed site that is not part of the same agency, then additional security can be implemented. This extra security will encrypt the data transmission from the end user laptop to the agency data center. This additional layer of security should only be used at sites that are not part of the contracted agency. This type of encryption can only be deployed for traffic that is designated to transverse the WAN.

Figure 11.1.3.1-1. Fixed Site Design

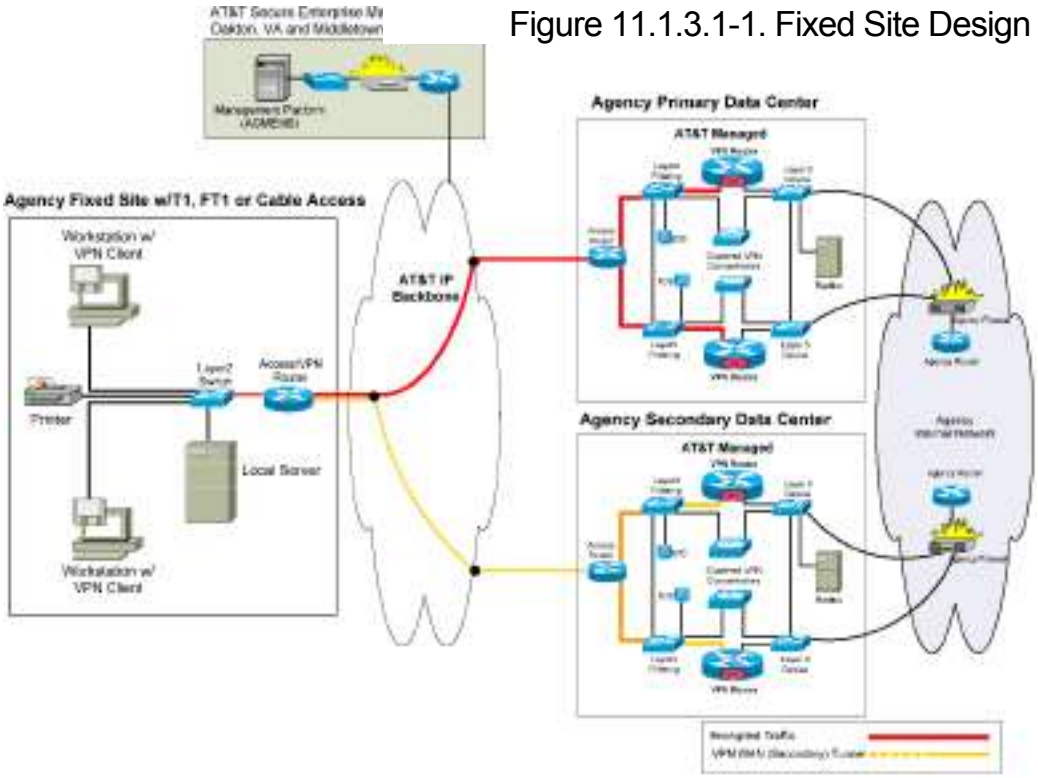

11.1.3.2 Remote User Access

Each remote access dial client will dial into the AT&T managed backbone using the AT&T provided Business Internet Service (BIS) dialer software. This connection will provide access to the agency's Data Centers. Each remote client will also have the VPN Client software package on his or her computer. This software package will initiate the secure VPN tunnel across the AT&T managed backbone back to the managed VPN device located at one of the agency's Data Centers (designated as primary). Each remote user will also have the ability to connect to the secondary Data Center, if the primary Data Center is unreachable.

Remote users will access an agency's resources utilizing the AT&T BIS or third party DSL/cable service. BIS offers an integrated remote access solution for both U.S. and International end users. Using this service for individual agency users with fixed and mobile site requirements will provide analog speeds up to 56 Kbps and up to 128 Kbps with Integrated Services Digital Network (ISDN) service. Secure communications for these end users to the agency's VPN network will be made available via the VPN client software on their PCs.

The VPN software provides:

- FIPS 140-1 Level 2, VPN Client
- VPN Client (IPSec) for *Windows 95, 98, ME, NT 4.0, 2000, XP, Linux (Intel), Solaris (UltraSparc* 32- & 64-bit), and *MAC* OS X 10.1

Each VPN Client will support multiple tunnel configuration/profiles so more than one tunnel can be defined for backup purposes. Only one of the profiles can be active at one time but if a failure occurs the client will prompt the user to reconnect using the backup profile.

11.1.3.3 Remote User Access Tunnel Details

After gaining access to the AT&T BIS Network, the end user will implement a VPN tunnel, which will terminate at a pre-defined agency Data Center (Primary or Back-up). The VPN concentrator(s), located at each Data Center, will terminate the remote user's VPN IPSec tunnel. Each concentrator is capable of supporting 5,000 remote user tunnels. The number of VPN concentrators per Data Center will be dependent upon the estimated number of concurrent users accessing the VPN. The described architecture would distribute the managed VPN concentrators across the agency's Data Centers. The *VPN* concentrators in each Data Center will terminate the end users' primary and secondary tunnels for secure access.

Each pair of VPN concentrators are arranged in active cluster architecture with load sharing and failover capability across the cluster. VPN redundancy is made available to each end user of an agency via primary and secondary Data Center access. Each VPN client will have a primary and secondary termination point built into its profile. Primary access will be via the IPSec tunnel built to the predefined primary Data Center. Secondary access would be initiated if the primary access fails due to Data Center disruption or to an over utilized primary concentrator at the Data Center. This secondary connection would be initiated without end user intervention at the Data Center; however, the users will need to re-establish their VPN sessions.

Figure 11.1.3.3-1 shows the architecture of the remote user access design.

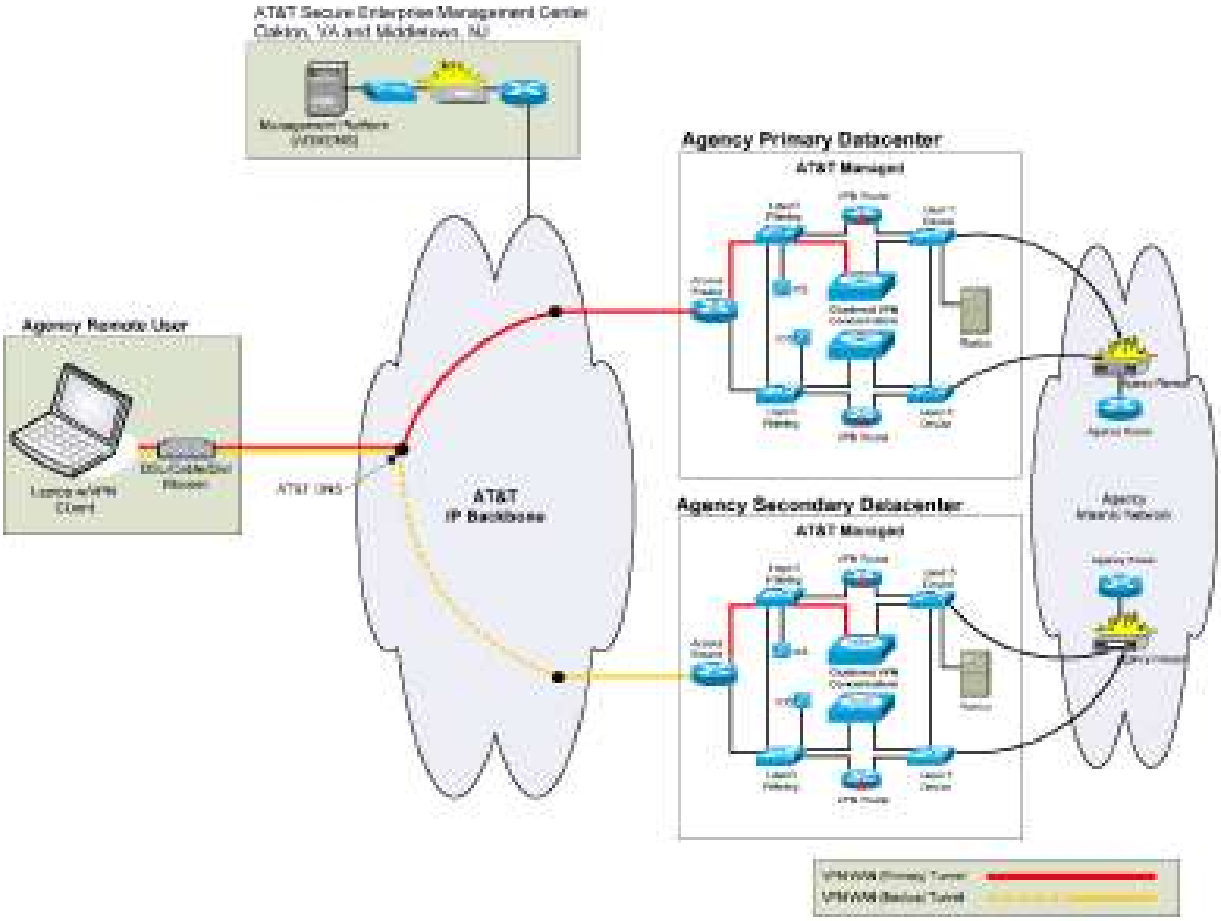

11.1.4 Availability, Diversity and Redundancy

The CM-VPNS design using the VPN gateways incorporate multiple levels of redundancy to provide a Government agency with high availability architecture.

11.1.4.1 Fixed Site Diversity

Each remote Fixed Site will have two tunnels established to the agency's Data Centers. If for any reason the primary tunnel to one of the Data Centers is not available, traffic will automatically switch over to the backup tunnel to the other Data Center. This mechanism provides for disaster recovery across Data Centers. A Routing Protocol will be used to dynamically propagate the routes between the Data Center VPN devices and the remote fixed site VPN devices. Each fixed site will have two

route entries in the routing table with the appropriate routing weights set for each Data Center. During a failure of the primary Data Center connection the routing protocol will withdraw the route of the primary Data Center automatically, for the fixed site VPN device, so all traffic will flow over the secondary tunnel to the backup Data Center without any user intervention.

11.1.4.2 Remote Users Diversity

Remote access users will have the capability to set up two tunnels. In the event that the primary tunnel cannot be established, the VPN client software will automatically attempt to connect to the backup Data Center. If a primary failure should happen while the end user is connected to the primary Data Center, the VPN Client will request the user to re-connect. At that point the end user will use the secondary tunnel to connect to the backup Data Center.

11.1.4.3 Data Center Diversity

The AT&T CM-VPNS architecture incorporates the ability to support two diverse agency Data Center locations. This design provides full redundancy in the event that one of the agency Data Centers becomes unavailable. Each agency Data Center can have a redundant set of VPN devices for backup tunnel termination of remote sites and remote end users. In addition, the AT&T Data Center architecture includes redundant Layer 3 switches for seamless packet filtering.

The Data Center clusters will use VRRP for dynamic failure and load balancing of the remote end user tunnels across all of the VPN devices that are deployed within the Data Center. The Data Center VPN devices will utilize dynamic routing protocol to route around any hardware or link failure inside the Data Center.

11.1.5 Managed Intrusion Detection System

The AT&T CM-VPNS includes an Intrusion Detection System (IDS) that is designed to efficiently protect data and information infrastructure. With the increased complexity of security threats, achieving efficient network intrusion security is critical to maintaining a high level of protection. Vigilant protection ensures business continuity and minimizes the impact of costly intrusions. AT&T Managed IDS delivers an efficient intrusion protection system through four key elements:

1 Accurate threat detection - IDS Sensor Software delivers the first step in providing a secure environment by detecting nearly all potential threats.

2 Intelligent threat investigation - Threat Response technology virtually eliminates false alarms, and automatically determines which threats need immediate attention to avoid a costly intrusion.

3 Ease of management - Browser based tools simplify the user interaction while providing powerful analytical tools allowing for a rapid and efficient response to threats.

4 Flexible deployment options - A range of high availability devices provide the flexible backbone for creating the secure and efficient intrusion protection system.

All four elements combined achieve both a secure and efficient comprehensive intrusion protection solution. The IDS software searches for signatures indicative of hacking attacks or other security violations by looking at the content and context of the data stream. The IDS

system can also identify and prevent several known classes of attacks, such as Ping of Death, TCP Hijacking, SYN/E-mail/Telnet Attacks, etc.

The CM-VPNS solution will provide perimeter security for a Government agency's Data Centers through the AT&T Managed IDS. The IDS sensors will continually monitor the network traffic for potential misuse or security policy violations. They can automatically terminate the specific connection, block the attacking host, log the incident, and/or send an alarm to the AT&T Network Operations Center. Upon recognizing patterns of misuse, the intrusion detection system automatically responds in a pre-defined manner. The agency defined signatures are predetermined and are treated as critical alarms by the AT&T Network Operations Center. The Service protects against Distributed Denial of Service (DDoS) attacks as well as a host of other malicious attacks.

11.1.6 Management Architecture

AT&T will monitor, maintain, and manage all components of the CM-VPNS solution and thus add to the assurance level of the architecture. This comprehensive management coverage includes monitoring of the agency's VPN network from AT&T's secure Network Operation Center (NOC) in Oakton, VA plus a backup NOC in Middletown, NJ. (These NOCs will be referred to henceforth as Enterprise Management Centers [EMCs]). The exception is the Managed Intrusion Detection solution which is managed out the AT&T NOC in Raleigh NC.

Both in-band and out-of-band management will be performed. In-band management will be performed using secure IPSec tunnels from the managed devices to the AT&T EMCs. The agency Data Centers will also be equipped with out-of-band management capability through the agency-provided analog modem lines. This will enable the AT&T EMCs to troubleshoot various devices in case in-band management is not available. Only authorized EMC personnel with proper credentials may access the Data Center devices. Login and passwords will be required. AT&T will deploy an integrated modem/code-activated switch for encrypted remote access to the Data Center VPN devices.

The EMCs will utilize secure out-of-band management of the Fixed Site devices in the event that in-band management is not available. The agency will provide PSTN modem lines in each fixed

site for this purpose. AT&T will deploy a standalone modem for access to the fixed site's AT&T managed devices. Only authorized AT&T EMC personnel with proper credentials may access the agency fixed site devices and will use Secure Shell (SSH) for secure access.

11.2 Service Management

AT&T's approach to CM-VPNS management is to provide comprehensive management; monitoring and maintenance of all AT&T supplied components. This will include Virtual Private Network (VPN) devices, LAN switches, circuits, client software and Intrusion Detection Systems (IDS).

11.2.1 CM-VPNS Management Solution

AT&T will offer a Government agency using CM-VPNS a comprehensive management solution that may be customized to meet the unique needs of the agency. This fully managed solution will include not only management of the networks but also of the VPN gateways, filtering, intrusion detection, logging servers, authentication servers, and other devices that AT&T would use to deliver the CM-VPNS solution. This solution is based upon the AT&T Government Markets Enterprise Management System (AGMEMS) platform. The CM-VPNS management solution includes elements of proactive network management service, maintenance, and customer care. Figure 11.2.1-1 illustrates the management philosophy.

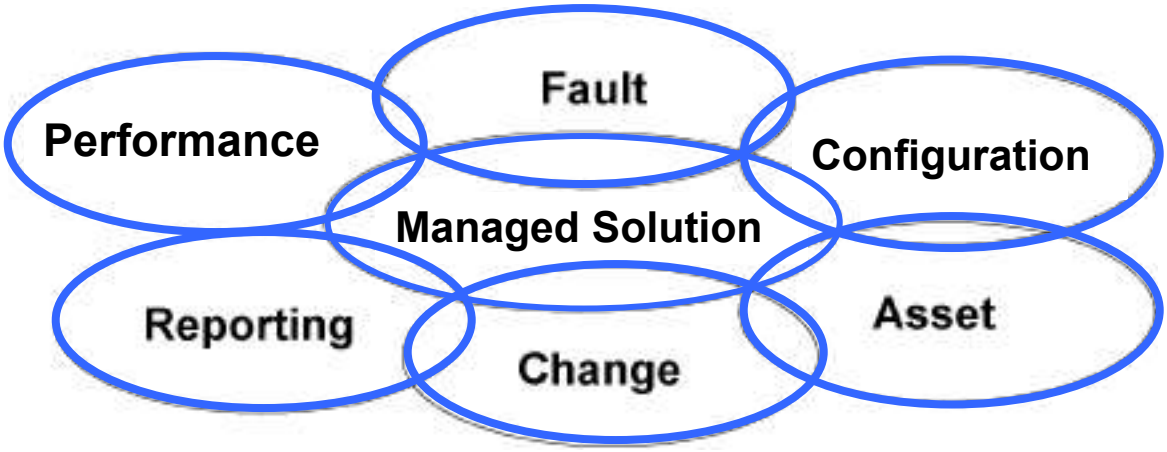

Figure 11.2.1-1 AT&T's Total Management Philosophy

AT&T's management philosophy is one where we will take full responsibility for the service that is being provided. This means that AT&T will provide:

- A staff of highly skilled personnel to work on the agency's VPN network. This team will provide expertise in the areas of planning, designing, deploying and supporting the agency's VPN network and users;
- Day to day operations support from Tier 2/3 help desk for problem resolution for any dial or dedicated VPN issue;

- Management, and monitoring of equipment 24 hours a day, 7 days a week (24x7) from a secured environment;
- Redundant and physically diverse Network Operations Centers (NOCs) to cope with outage at the primary NOC;
- Proactive fault and performance management including regularly scheduled service reports;
- Accountability and management of all assets and configurations;
- Tracking and back-up of all the required equipment configurations and service logs;
- All maintenance and repair functions including appropriate service add, moves, and changes;
- VPN equipment, and upgrades as part of Monthly Recurring Charge (MRC). (All upgrades are subject to FIPS approval and agency acceptance)

An agency, thus, does not need be concerned about the daunting task of supporting this specialized network nor incur significant capital expense to provide secure reliable communications to their end user population. AT&T will assume this responsibility.

11.2.2 Management Components

The AT&T CM-VPNS management solution offers a host of features that consist of asset, configuration, surveillance, performance, and fault management. The following components are integrated into the AT&T Fully Managed solution for CM-VPNS:

- Enterprise Network Maps
- Device Management
- Application Management
- Automatic Trouble Ticket Generation
- Performance Reporting
- Service Level Management
- Configuration Management
- Event Correlation
- Web Portal Interface
- Basic Reports
- Access Management
- Customer Care

11.2.3 Customer Care

The AT&T Customer Care organization is the agency interface into AT&T in the event the Government agency personnel experience a service issue or just have simple questions. Agency personnel using CM-VPNS may contact the AT&T Customer Care organization directly with telephone numbers that will be provided. The agency personnel may also use the AT&T secure web portal, using the Secure Socket Layer (SSL) for customer security, to make changes to the services or open trouble tickets.

An agency using CM-VPNS and contacting the AT&T Customer Care (for Tier 2 support) will speak to a representative who will identify and address the problem (if any) as quickly as possible. At that time, the AT&T customer care representative will ask important questions to ensure that we completely understand the issue. The customer care representative will open a trouble ticket for the trouble and will note all important information in the ticket so that our Tier 2 engineers may begin to resolve the issue. When the ticket is opened there will be a severity level assigned to the trouble. This severity level helps indicate the type of trouble, what resources

are required to repair the trouble, and the escalation path and time-frame for resolution. Once the service issue is investigated, troubleshot, and diagnosed, the Tier 2 engineer will dispatch the appropriate organization to repair the service issue. As with any trouble, the Tier 2 engineer will update the trouble ticket and the customer care representative will notify the agency when the problem is identified and if it is necessary to dispatch a Local Exchange Carrier (LEC) representative or any other AT&T vendor. The AT&T Customer Care representative will monitor and track the work until the problem is resolved.

AT&T Customer Care	*Problem Type*	*Telephone #*	*Hours of Operation*
Technical Support Help Desk End Users and CPOC	To determine a local access number or regarding any Technical Problem	To be provided.	24x7
Account Support	Changes or Additions to the Service	To be provided.	Monday through Friday 8:00 AM to 6:00 PM Eastern Time

The customer care representative is also responsible for updating the agency user of CM-VPNS on trouble status. Alternatively, agency personnel may access the online ticketing system, via the AT&T secure web portal, to obtain status.

11.2.4 Account Administration

11.2.4.1 Ordering

A CM-VPNS agency, once established, may order remote user and fixed site services through the following method:

- Single orders through a paper form authorized by the Contracting Officer (CO) by facsimile, pdf file or mail.

To implement this process, the CM-VPNS agency will need to assign a Contracting Officer for the service and identify them to AT&T. The CO must be a person empowered by the agency to obligate funds for CM-VPN service.

11.2.4.2 Moves, Adds, Changes and Disconnects (MACD)

The Contracting Officer may order MACD through the following method:

- Single orders through a paper form authorized by the Contracting Officer (CO) by facsimile, pdf file or mail.

The only difference between ordering new services and ordering changes is the forms that are used

to request the change. In other words, the CM-VPNS agency will use a different paper order forms for MACDs.

The following **Table 11.2.4.2-1** illustrates examples of MACDs.

Move	***Add***	*Change*	***Disconnect***
. Fixed site moving from locations. . Hub site moving locations.	. Adding class of service to a line. . Add MARO to an existing line.	. Increasing link speed . Changing password . Changing user name . Changing route or address filters . Change addressing . Change account policy	. Disconnect dial, fixed, and hub site.

Table 11.2.4.2-1. Examples of MACDs

Note: *Professional services that are unbundled under this CM-VPNS and required under this subsection, MACD, shall be priced at the labor rates as set forth elsewhere in this GSA Schedule.*

Agency Agreement

1. Effective Date

This Agreement is effective upon execution of an IP Transport Attachment and shall continue in effect as long as the Attachment is in effect.

2. Services

Customer authorizes AT&T to arrange for and coordinate installations and disconnection of tariffed and other communications services as required by Customer for its configuration.

3. Payment of Charges

All recurring and non-recurring charges made by vendors for service ordered on Customer's behalf shall be paid by Customer directly and are not the responsibility of AT&T.

4. Limitation of Liability

Customer's sole and exclusive remedies shall be: (a) In the event of breach of this Agency Agreement by AT&T, Customer's right to terminate this Agency Agreement; (b) Customer's right to direct damages for damage to real or tangible personal property or damages for bodily injury or death, proximately caused by AT&T's negligence; and (c) Customer's right to receive a credit for charges billed to Customer by vendors solely as a result of negligence by AT&T. Except as provided in subparagraphs (b) and (c) above, AT&T shall have no liability for either direct, indirect, incidental or consequential damages (including lost profits) resulting from or arising in connection with this Agency Agreement. AT&T shall not be responsible for non-performance by any vendor from which AT&T orders service or equipment on Customer's behalf.

5. Coverage

This Agency Agreement is in effect for all of Customer's locations unless otherwise specified by Customer in writing.

THIS IS THE ENTIRE AGENCY AGREEMENT BETWEEN CUSTOMER AND AT&T WITH RESPECT TO IP TRANSPORT SERVICES. ANY AMENDMENTS, MODIFICATIONS OR CHANGES MUST BE IN WRITING AND SIGNED BY CUSTOMER AND AT&T.

CUSTOMER NAME AT&T Corp.

	By:	By:
(Authorized Signature)	(Authorized Signature)	
(Typed or Printed Name)	(Typed or Printed Name)	
(Title)	(Title)	
(Date)	(Date)	

Monthly Fee: FLAT RATE BILLING

Sustained Bandwidth Usage	MIS with Managed Router	MIS without Managed Router
56 Kbps	$452.08	$191.32

Monthly Fee: T1 - FLAT RATE

Sustained Bandwidth Usage	MIS with Mgd Router	MIS without Managed Router
128 Kbps	$383.28	$344.76
256 Kbps	$469.94	$431.42
384 Kbps	$554.68	$516.16
512 Kbps	$639.44	$600.92
768 Kbps	$666.40	$627.88
1024 Kbps	$693.36	$654.84
1.544 Mbps	$505.90	$480.22

Monthly Fee: T1 - FLAT RATE

Sustained Bandwidth Usage	MIS with Mgd Router	MIS without Managed Router
NxT1 3 Mbps	$1,502.28	$1,309.68
NxT1 4.5 Mbps	$1,887.48	$1,694.88
NxT1 6 Mbps	$2,118.60	$1,926.00

Monthly Fee: Flat Rate - T3

Minimum Bandwidth Commitment	MIS with Mgd Router (Plus)	MIS without Managed Router
2 Mbps	$1,097.82	$905.22
3 Mbps	$1,502.28	$1,309.68
4 Mbps	$1,848.96	$1,656.36
5 Mbps	$1,926.00	$1,733.40
6 Mbps	$2,118.60	$1,926.00
7 Mbps	$2,561.58	$2,176.38
8 Mbps	$2,792.70	$2,407.50
9 Mbps	$3,023.82	$2,638.62
10 Mbps	$2,144.28	$2,831.22
15 Mbps	$4,179.42	$3,794.22
20 Mbps	$5,142.42	$4,757.22
25 Mbps	$6,124.68	$5,739.48
30 Mbps	$7,087.68	$6,702.48
35 Mbps	$8,069.94	$7,684.74

40 Mbps	$9,032.94	$8,647.74
45 Mbps	$10,015.20	$9,630.00
Monthly Fee: Flat Rate - OCx		
60 Mbps	$7,603.42	$7,368.02
155 Mbps	$16,995.88	$16,760.48
622 Mbps	$48,916.12	$47,739.12
2.5 Gbps	$186,907.60	$184,553.60

Monthly Fee: BURSTABLE BILLING T1 - PRIVATE LINE

Sustained Bandwidth Usage	MIS with Managed Router	MIS without Managed Router
Up to 128 Kbps	$303.02	$277.34
128.01 to 256 Kbps	$372.36	$346.68
256.01 to 384 Kbps	$439.12	$413.44
384.01 to 512 Kbps	$508.46	$482.78
512.01 to full T1	$603.48	$577.80

Monthly Fee: BURSTABLE T3 - PRIVATE LINE, ASYNCHRONOUS TRANSFER MODE (ATM)

Sustained Bandwidth Usage	MIS with Mgd Router	MIS without Managed Router
Up to 6 Mbps	$2,523.06	$2,330.46
6.01 to 7.5 Mbps	$3,139.38	$2,754.18
7.51 to 9.0 Mbps	$3,563.10	$3,177.90
9.01 to 10.5 Mbps	$3,909.78	$3,524.58
10.51 to 12.0 Mbps	$4,256.46	$3,871.26
12.01 to 13.5 Mbps	$4,603.14	$4,217.94
13.51 to 15.0 Mbps	$4,949.82	$4,564.62
15.01 to 16.5 Mbps	$5,238.72	$4,853.52
16.51 to 18.0 Mbps	$5,527.62	$5,142.42
18.01 to 19.5 Mbps	$5,816.52	$5,431.32
19.51 to 21.0 Mbps	$6,105.42	$5,720.22
21.01 to 45.0 Mbps	$11,960.46	$11,575.26

Monthly Fee: BURSTABLE OC3 - PRIVATE LINE

Sustained Bandwidth Usage	MIS with Mgd Router	MIS without Managed Router
Up to 35 Mbps	$5,873.24	$5,637.84
35.01 to 45 Mbps	$7,309.18	$7,073.78
45.01 to 55 Mbps	$8,486.18	$8,250.78
55.01 to 65 Mbps	$9,674.94	$9,439.54
65.01 to 75 Mbps	$10,863.72	$10,628.32
75.01 to 85 Mbps	$12,052.48	$11,817.08
85.01 to 100 Mbps	$13,829.76	$13,594.36
100.01 to 125 Mbps	$16,795.80	$16,560.40
125.01 to 155 Mbps	$20,350.34	$20,114.94

Monthly Fee: BURSTABLE OC-12- PRIVATE LINE

Sustained Bandwidth Usage	MIS without Managed Router
Up to 75 Mbps	$10,628.32
75.01 to 150 Mbps	$17,655.00
150.01 to 225 Mbps	$24,681.70
225.01 to 300 Mbps	$31,696.62
300.01 to 375 Mbps	$37,699.32
375.01 to 450 Mbps	$43,702.02
450.01 to 525 Mbps	$49,634.10
525.01 to 622 Mbps	$57,296.36

Monthly Fee: BURSTABLE OC-48 - PRIVATE LINE

Sustained Bandwidth Usage	MIS with Mgd Router	MIS without Managed Router
Up to 1250 Mbps	$117,229.20	$114,404.40
1251 to 1350 Mbps	$126,150.86	$123,326.06
1351 to 1450 Mbps	$135,072.52	$132,247.72
1451 to 1550 Mbps	$143,994.18	$141,169.38
1551 to 1650 Mbps	$152,915.84	$150,091.04
1651 to 1750 Mbps	$161,837.50	$159,012.70
1751 to 1850 Mbps	$170,759.16	$167,934.36
1851 to 1950 Mbps	$179,680.82	$176,856.02
1951 to 2050 Mbps	$188,602.48	$185,777.68
2051 to 2150 Mbps	$197,524.14	$194,699.34
2151 to 2250 Mbps	$206,445.80	$203,621.00
2251 to 2350 Mbps	$215,367.46	$212,542.66
2351 to 2450 Mbps	$224,289.12	$221,464.32

Monthly Fee: Hi Cap Flex T3 - Private Line

Minimum Bandwidth Commitment	MIS with Mgd Router	MIS without Managed Router	Incremental Usage Fee per Mbps
2 Mbps	$670.90	$553.20	$331.92
3 Mbps	$918.06	$800.36	$320.14
4 Mbps	$1,129.92	$1,012.22	$303.66
5 Mbps	$1,177.00	$1,059.30	$254.24
6 Mbps	$1,294.70	$1,177.00	$235.40
7 Mbps	$1,565.42	$1,330.02	$228.10
8 Mbps	$1,706.66	$1,471.26	$220.80
9 Mbps	$1,847.90	$1,612.50	$214.92
10 Mbps	$1,965.60	$1,730.20	$207.62
15 Mbps	$2,554.10	$2,318.70	$185.50
20 Mbps	$3,142.60	$2,907.20	$174.44
25 Mbps	$3,742.86	$3,507.46	$168.32
30 Mbps	$4,331.36	$4,095.96	$163.84
35 Mbps	$4,931.64	$4,696.24	$161.02
40 Mbps	$5,520.14	$5,284.74	$158.66
45 Mbps	$6,120.40	$5,885.00	NA

Monthly Fee: Hi Cap Flex OC3 - Private Line

Minimum Bandwidth Commitment	MIS with Mgd Router	MIS without Managed Router	Incremental Usage Fee per Mbps
35 Mbps	$4,931.64	$4,696.24	$161.02
40 Mbps	$5,520.14	$5,284.74	$158.66
45 Mbps	$6,120.40	$5,885.00	$157.02
60 Mbps	$7,603.42	$7,368.02	$147.36
70 Mbps	$8,592.10	$8,356.70	$143.36
80 Mbps	$9,580.78	$9,345.38	$140.30
90 Mbps	$10,569.46	$10,334.06	$137.70
100 Mbps	$11,558.14	$11,322.74	$135.82
120 Mbps	$13,535.50	$13,300.10	$13,30
144 Mbps	$15,512.86	$15,277.46	$129.70
155 Mbps	$16,995.88	$16,760.48	NA

Monthly Fee: Hi Cap Flex OC12 - Private Line

Minimum Bandwidth Commitment	MIS with Mgd Router	MIS without Managed Router	Incremental Usage Fee per Mbps
70 Mbps	$8,592.10	$8,356.70	$143.36
80 Mbps	$9,580.76	$9,345.38	$140.30
90 Mbps	$10,569.46	$10,334.06	$137.70
100 Mbps	$11,558.14	$11,322.74	$135.82
120 Mbps	$13,535.50	$13,300.10	$13,30
144 Mbps	$15,512.86	$15,277.46	$129.70
155 Mbps	$16,995.88	$16,760.48	$127.36
200 Mbps	$20,927.06	$19,750.06	$118.40
250 Mbps	$24,257.98	$23,080.98	$110.88
300 Mbps	$27,588.88	$26,411.88	$105.70
350 Mbps	$30,931.56	$29,754.56	$101.92
400 Mbps	$34,262.48	$33,085.48	$99.34
450 Mbps	$37,593.38	$36,416.38	$97.22
500 Mbps	$40,924.30	$39,747.30	$95.34
550 Mbps	$44,255.20	$43,078.20	$93.92
600 Mbps	$47,586.12	$46,409.12	$92.74
622 Mbps	$48,916.12	$47,739.12	NA

Monthly Fee: Hi Cap Flex OC48- Private Line

Minimum Bandwidth Commitment	MIS with Mgd Router	MIS without Managed Router	Incremental Usage Fee per Mbps
600 Mbps	$47,586.12	$46,409.12	$92.74
622 Mbps	$48,916.12	$47,739.12	$92.04
700 Mbps	$54,247.94	$53,070.94	$91.80
800 Mbps	$60,909.76	$59,732.76	$91.58
1250 Mbps	$97,691.00	$95,337.00	$91.34
1550 Mbps	$120,054.00	$117,700.00	$91.10
1850 Mbps	$142,417.00	$140,063.00	$90.86
2150 Mbps*	$164,780.00	$162,426.00	$90.62
2450 Mbps*	$186,907.60	$184,533.60	NA

Monthly Fee and Install Price: MIS OPTIONS (Other)

OPTION		MONTHLY FEE	INSTALL PRICE
Additional Primary DNS (Available in increments of up to 15 zones with a maximum of 150 Kilobytes of zone file data)		100.76	N/A
Additional Secondary DNS (Available in increments of up to 15 zones with a maximum of 150 Kilobytes of zone file data)		100.76	N/A
Outbount Mail Relay: (1yr. Contract)		151.13	N/A
Managed Firewall Service - Server Based		$2,125.00	N/A
Managed Firewall Service Optional			
Managed Firewall URL Screening 100 Users		$85.00	$349.12
Managed Firewall URL Screening 500 Users		$297.50	$349.12
Managed Firewall URL Screening 1000 Users		$425.00	$349.12
Managed Firewall URL Screening 3000 Users		$765.00	$349.12
Managed Firewall URL Screening 5000 Users		$1,062.50	$349.12
Managed Firewall 100 Mb Ethernet Support		$850.00	$997.49
Managed Firewall Strong Authentication Support		$42.50	$249.38
Managed Firewall Extranet Support		$637.50	$498.75
Managed Firewall Reporting: Personal		$124.69	$199.50
Managed Firewall Reporting: Professional		$349.12	$199.50
Managed Firewall Reporting: Enterprise		$598.49	$199.50
Managed Firewall Remote User VPN		$0.00	$997.49
Triple homed Configuration		$498.75	$0.00
On-Site Maintenance/Service Level Response Time Options:			
5 Days/week, 8 hours/day, 4 business hours		$127.50	N/A
7 Days/week, 8 hours/day, Next busines day		$255.00	N/A
7 Days/week, 24 hours/day, 4 business hours		$425.00	N/A

MIS Installation Charges

	MIS with Mgd Router			MIS with Mgd Rout Managed Router	
Access Speed	**Tele-Install**	**On-Site**		**Tele-Install**	**On-Site**
56 Kbps	**$0.00**	$3,049.50		**$0.00**	**N/A**
128 Kbps - 1.5 Mbps	**$0.00**	$3,852.00		**$0.00**	**N/A**
NxT1 (3.0 Mbps - 6.0 Mbps	**$0.00**	$4,012.50		**$0.00**	**N/A**
Tiered/Full T3	**N/A**	$4,012.50		**$0.00**	**N/A**
OC-X	**N/A**	$8,025.00		**$0.00**	**N/A**

Service Activation Fees (Options)

Outbound Mail F

OPTION		Service Activation Fee
Additional DNS Administration		$0.00

1 AT&T Managed Internet Service (MIS) GSA Price List Notes

The prices specified in this Price List apply to each location provisioned for AT&T MIS and, other than Access Facilities Charges, are guaranteed for the Service Period only and only for services initially purchased under this Attachment.

These prices apply to AT&T MIS service, quantities of one or more circuits, and a 12 Month service period.

1.1 AT&T MIS Service Offer

1.1.1 Managed Internet Service Monthly Service Charge

Includes: Port, Primary DNS and Secondary DNS, Network News Feeds, Usage Reports.

1.1.2 Managed Internet Service with Managed Router Monthly Service Charge

Includes: Port, CPE and CPE Management, Primary DNS and Secondary DNS, Packet Filtering, Network News Feeds, Usage Reports.

1.1.3 Options Charges - Managed Firewall Service ServerBased

Features	*Monthly Price*	*Install Price*
Managed Firewall URL Screening 100 User	$100.00	$350.00
Managed Firewall URL Screening 500 User	$350.00	$350.00
Managed Firewall URL Screening 1000 User	$500.00	$350.00
Managed Firewall URL Screening 3000 User	$900.00	$350.00
Managed Firewall URL Screening 5000 User	$1,250.00	$350.00
Managed Firewall 100 Mb Ethernet Support	$1,000.00	$1,000.00
Managed Firewall Strong Authentication Support	$50.00	$250.00
Managed Firewall Extranet Support	$750.00	$500.00

Features	Monthly Price	Install Price
Managed Firewall Reporting; Personal	$125.00	$200.00
Managed Firewall Reporting; Professional	$350.00	$200.00
Managed Firewall Reporting; Enterprise	$600.00	$200.00
Managed Firewall Remote User VPN	$0.00	$1,000.00
Triple homed Configuration	$500.00	$0.00
On-Site Maintenance/Service Level Response Time Options		
5 days/week, 8 hours/day, 4 Business Hours	$150.00	
7 days/week, 8 hours/day, Next Business Day	$300.00	
7 days/week, 24 hours/day, 4 Hours	$500.00	

1.2 Access Facilities Charges

Access Facilities will be priced on an individual case basis by your AT&T Representative from Customer location to the point where service availability has been defined. The following access types will be supported:

- Digital Private Line (ACCUNET Digital Services)
- Others (including Integrated Access) as approved by AT&T on a case-by-case basis.

Service will be available at *ACCUNET* Points of Presence within geographic scope of this agreement.

1.3 Service Period

The Service Period will commence when billing begins and, unless terminated in accordance with the provisions in the Agreement, will continue on effect for a period of twelve (12) months. At the end of the Service Period, service will continue on a month-to-month basis until terminated by either party giving the other party at least thirty (30) days prior written notice.

2 AT&T Dedicated Hosting Services – Managed Service GSA Price List

The prices specified in this price list apply to each Managed Service application provisioned and are guaranteed for the service period only and only for services initially purchased under this Attachment.

These prices apply to AT&T Dedicated Hosting Services, quantities of one application and a 12-month service period.

2.1 AT&T Dedicated Services - Managed Service Offer

Item	Monthly Recurring Price	Non Recurring Price
NT Managed Service Bundle	$24,338.60	$178,278.77
Bundle consists of:		
Bandwidth - 3 MB Committed Information Rate		
8 Compaq DL380 Servers		
2 Compaq ML570 Servers		
2 Compaq RA4100 Fibre Channel Disk Arrays		
Setup and management of servers and disk arrays		
Managed Firewall Service		
Managed Load Balancing Service		
Managed Backup and Restore Service		
16 port hub		
Managed Network-Based Intrusion Detection Service		
128 Kbps Frame Relay Connection		

Note: AT&T may substitute equivalent hardware due to availability or technological advances.

Item	Monthly Recurring Price	Non Recurring Price
Enhanced NT Managed Service Bundle	$19,359.43	$14,800.18
Bundle consists of:		
Bandwidth - 7 MB Committed Information Rate		
18 Servers		
1 SAN Array Storage Area Network		
Setup and management of servers and disk arrays		

Item	Monthly Recurring Price	Non Recurring Price
Managed Firewall Service		
Managed Load Balancing Service		
Managed Backup and Restore Service		
24 port hub		
Managed Network-Based Intrusion Detection Service		
128 Kbps Frame Relay Connection		

This enhanced configuration does not include Managed Load Balancing Service.

Note: AT&T may substitute equivalent hardware due to availability or technological advances.

2.2 Connectivity

The connectivity provided as part of this offer does not include inbound email or Internet access capabilities, which are the customer's responsibility to obtain. This offer does not include back end connectivity, which can be provided via frame relay or POTS line and can be separately ordered from AT&T. Any inside wiring needed for connectivity is the customer's responsibility. The customer must order any local access that may be needed for the back end connection directly from the authorized access provider and notify the Internet Data Center of the expected installation date by contacting the AT&T Installation Coordinator. AT&T is not responsible for tracking the installation of, or for trouble shooting of, the local access provider's order. Authorization to provide access into an AT&T building does not automatically imply that there is capacity available between the hosting center and the access vendor. Specific questions regarding available capacity for back-end connectivity at a specific point-in-time should be referred to your AT&T Sales Representative.

2.3 Service Period

The service period will commence when billing begins and, unless terminated in accordance with the provisions of this agreement, will continue in effect for twelve (12) months. At the end of the Service Period, service will continue on a month-to-month basis until terminated by either party giving the other party at least thirty (30) days prior written notice.

AT&T Business Internet Service - Corporate Dial Price Plan

Item	Total Price Monthly RecurringR	Non-Recurring
User ID per ID (1)	$16.00	N/A
Additional Hours in Excess of 150 Hours per hour	$1.34	N/A
800 Number Access Surcharge per hour	$4.30	N/A
Out of Region Global "Roaming" Surcharge per hour	$4.84	N/A
ISDN Local Dial Access Surcharge per hour	$1.01	N/A
Custom Mail Domain Registration per domain	N/A	$100.76
Personal 10 MB of Web Space	$5.04	N/A

NOTES:
(1) Commercial price is for the 150 hour plan for 25 or more users.
(2) Includes 1 User ID, 150 hours of usage, Email with 12 MB of storage, Web mail and spam control.

NSP = Not Separately Priced
N/A = Not Applicable

AT&T Business Internet Service - Credit Card Billing Service Price Plan

Base Plan (1)	Total Price Monthly Recurring	Non-Recurring
Subscription Charge	$5.99	N/A
Additional Hours in Excess of 5 Hours - per hour	$1.50	N/A
800 Number Access Surcharge per hour	$5.99	N/A
Out of Region Global "Roaming" Surcharge per hour	$8.98	N/A
ISDN Local Dial Access Surcharge per hour	$1.00	N/A
Additional User Ids	$4.94	$4.94

NOTES:
(1) Includes 1 User ID, 5 hours of usage, Email with 3 MB of storage and spam control. A maximum of 6 User Ids may be ordered per account. Concurrent logons are permitted.

NSP = Not Separately Priced
N/A = Not Applicable

177

AT&T Business Internet Service - Credit Card Billing Service Price Plan

Comprehensive Plan (1)	Total Price Monthly RecurringR	Non-Recurring
Subscription Charge	$20.10	N/A
Additional Hours in Excess of 150 Hours - per hour	$1.50	N/A
800 Number Access Surcharge per hour	$5.99	N/A
Out of Region Global "Roaming" Surcharge per hour	$8.98	N/A
ISDN Local Dial Access Surcharge per hour	$1.00	N/A
Additional User Ids	N/A	N/A

NOTES:
(1) Includes 6 User IDs, 150 hours of usage, Email with 6 MB of storage, 10 MB of personal web space and spam control. A maximum of 6 User Ids may be ordered per account. Concurrent logons are not permitted.

NSP = Not Separately Priced
N/A = Not Applicable

AT&T Business Internet Service - Credit Card Billing Service Price Plan

Premium Plan (1)	**Total Price** Monthly Recurring	Non-Recurring
Subscription Charge	$25.14	N/A
Additional Hours in Excess of 150 Hours - per hour	$0.99	N/A
800 Number Access Surcharge per hour	$5.99	N/A
Out of Region Global "Roaming" Surcharge per hour	$4.79	N/A
ISDN Local Dial Access Surcharge per hour	$1.00	N/A
Additional User Ids	N/A	N/A

NOTES:
(1) Includes 6 User IDs, 150 hours of usage, Email with 12 MB of storage, 10 MB of personal web space, custom mail subdomains, web mail and spam control. A maximum of 6 User Ids may be ordered per account. Concurrent logons are not permitted.

NSP = Not Separately Priced
N/A = Not Applicable

AT&T Digital Subscriber Line Price Plan

Item	Total Price Monthly Recurring	Total Price Non-Recurring
Installation:	N/A	$302.37
Single-User IDSL 144/144 (2)	N/A	$600.00
Multi-User (2)	N/A	$175.00
ADSL Line Shared Single-User Customers (3)	N/A	$100.76
Customer Premises Equipment:	N/A	$450.00
Modem Purchase - Single-User per connection	N/A	$100.00
DSL Router Purchase - Multi-User and Single-User 144 Kbps per connection	N/A	$25.00
Bring Your Own CPE Option - Multi-User and Single-User 144K Only	N/A	$100.00
Service Support Charges:	N/A	$150.00
DNS Setup - Multi-User only	N/A	$300.00
Service Repair/Field Technician Dispatch - per visit (4)	N/A	$0.00
Moving from One Location to Another - Single-User per location	N/A	$100.00
Moving from One Location to Another - Multi-User per location	N/A	$249.99
Upgrade of Service Bandwidth - per upgrade (5)	$54.96	N/A
Downgrade of Service Bandwidth - Single-User per downgrade (5)	$79.95	N/A
Downgrade of Service Bandwidth - Multi-User per downgrade (5)	$99.95	N/A
Service Charges:	$149.95	N/A
Single-User ADSL 608 Kbps/128 Kbps	$149.95	N/A
Single-User ADSL 1.5 Mbps/384 Kbps	$199.95	N/A
Single-User IDSL 144 Kbps/144 Kbps	$269.95	N/A
Multi-User SDSL 144 Kbps/144 Kbps	$349.95	N/A
Multi-User SDSL 192 Kbps/192 Kbps	$399.96	N/A
Multi-User SDSL 384 Kbps/384 Kbps	$20.00	N/A
Multi-User SDSL 768 Kbps/768 Kbps	$40.00	N/A
Multi-User SDSL 1.1 Mbps/1.1 Mbps	$15.00	N/A
Multi-User SDSL 1.5 Mbps/1.5 Mbps	$5.00	N/A
Optional Services:		
Managed Single-User Service		
Managed Multi-User Service - Multi-User and Single-User 144 Kbps		
Domain Name Hosting (6)		
Additional Email Boxes - per mail box (7)		

NOTES:

(1) Inside wire charges may apply if jack is more than 50 feet from the Telephone Network Interface.
(2) Applies only to those customers who request a technician installation or who use a splitter on their line or who have six or more devices on the
(3) Applies only to those customers who have not chosen the managed service option.
(4) A charge for change from one DSL technology (IDSL, ADSL, SDSL) to another may also apply. This charge consists of the CPE charge for the
(5) Primary DNS for Multi-User service only. Additional fees will be charged by the Domain Name Registry.
(6) Two mail boxes are included with Single-User service. Five mail boxes are included with Multi-User service.

NSP = Not Separately Priced N/A = Not Applicable

SafeNet Virtual Private Network Price Plan

Part No.	Item	
	SafeNet Security	S
Center Complete Systems (1)		E
SE-SC-WS	SafeNet Security Center Workstation (2) (21)	-
SE-SC-RED-PD	Primary Database Server (3) (21)	S
SE-SC-RED-SD	Secondary Database Server (3) (21)	P
SE-EM-PPD	Primary Policy Database (4)	E
SE-EM-SPD	Secondary Policy Database (4)	E
SE-PS	Policy Server (4)	D
	SafeNet Security Center Software Bundles (5)	-
SE-SC-SW	Software bundle used to install a SafeNet Security Center Workstation	F
SE-SC-RED-PD-SW	Software bundle used to install a Primary Database Server	E
SE-SC-RED-SD-SW	Software bundle used to install a Secondary Database Server	-
SE-EM-PD-SW	Software bundle used to install a Primary Policy Database	U
SE-EM-SD-SW	Software bundle used to install a Secondary Policy Database	P
SE-PS-SW	Software bundle used to install a Policy Server	G
	SafeNet Security Center Options	-
SE-EM-ASB	SafeNet Enterprise Manager Automation System Bundle (6)	S
SE-SC-TD	Safenet Security Center Tape Drive	F
PIN-MAIL	Pin Mailers - per 1,000	E
SE-SC-CERT	Certification of a PC for use with SafeNet Security Center Software (7)	
	Gateway Products (8)	U
SE-SPEED-FE	VPN Gateway Encryptor - 100 sessions and T1 throughput	p
SE-SPEED-RFE	VPN Gateway Encryptor - 1,000 sessions and 10MB throughput	g
SE-SPEED-SFE	VPN Gateway Encryptor - 4,000 sessions and 70MB throughput	r
SE-SPEED-FE-UPG-RFE	Upgrade SE-SPEED-FE to SE-SPEED-RFE (9)	a
		d

		Total Price Monthly Recurring	Total Price Non-Recurring
e SE-SPEED-FE to SE-SPEED-SFE (9) SE-SPEED-RFE-UPG-SF Upgrade SE-SPEED-RFE to SE-SPEED-SFE (10)		N/A	$17,128.46
	Client Products (11)		
SE-SOFT	SafeNet/Soft for use with Windows NT 4.0, Windows 95/98	N/A	$21,410.58
SE-SMART-D	SafeNet/Smart-D (12)	N/A	$21,410.58
SE-SMART-P	SafeNet/Smart-P (13)	N/A	$42,821.16
SE-DIAL	SafeNet Dial - Portable Secure Modem (14, 15)	N/A	$42,821.16
SE-DIAL-R	SafeNet Dial - Portable Encryptor with RS232 Interface (14, 16)	N/A	$21,410.58
IDC-DP/SN	Smartcard - User Authentication and/or ConfigurationToken for secret key use	N/A	$4,282.12
IDC-330/SN	Smartcard - User Authentication and/or ConfigurationToken for public key use	N/A	$8,564.23
SIP-SOFTPK-CD	SafeNet Soft-PK on a CD - per license (17)	N/A	$8,564.23
SIP-SOFTPK-LIC	License for electronic delivery of SafeNet Soft-PK - per license (17)	N/A	$25,692.70
SIP-SOFTREMOTE-CD	SafeNet/SoftRemote on a CD - per license (18)	N/A	$25,692.70
SIP-SOFTREMOTE-EV	Electronic Delivery of SafeNet/SoftRemote - per license (18)	N/A	$8,564.23
	Managed Service Pricing (19)		
MS-Client -01	Client Managed Service for Users Implementing SafeNet Smart or SafeNet SoftRemote 1-999 accounts	N/A	$214,105.79
MS-Client -1000	Client Managed Service for Users Implementing SafeNet Smart or SafeNet SoftRemote 1,000-4,999 accounts	N/A	$586.65
MS-Client -5000	Client Managed Service for Users Implementing SafeNet Smart or SafeNet SoftRemote 5,000 accounts or more	N/A	$492.44
MS-Speed -01	VPN Gateway Managed Service for Sites Implementing SafeNet Speed 1-499 accounts	N/A	$1,712.85
MS-Speed -500	VPN Gateway Managed Service for Sites Implementing SafeNet Speed 500-999 accounts	N/A	$1,109.07
MS-Speed -1000	VPN Gateway Managed Service for Sites Implementing SafeNet/Speed 1,000 accounts or more	N/A	$4,277.83
MS-Router-01	Managed Router Service	N/A	$8,559.95
MS-Router-500	Managed Router Service 500-999 accounts	N/A	$3,335.77
MS-Router-1000	Managed Router Service 1,000 accounts or more	N/A	$7,703.53
STS-CRD	Provides a new configuration or user smartcard within 5 business days after receipt of order	N/A	$5,134.26
		N/A	$67.66
		N/A	$128.46
		N/A	$214.11
		N/A	$680.86
		N/A	$526.70
		N/A	$33.40
		N/A	$33.40
		N/A	$110.48
		N/A	$110.48
		N/A	$127.61
		N/A	$127.61
		$19.41	N/A
		$17.47	N/A
		$15.42	N/A
		$256.93	N/A
		$226.10	N/A
		$190.13	N/A
		$227.23	N/A
		$205.54	N/A
		$182.70	N/A
		N/A	$79.60

STS-CRD-EXP	Provides a new configuration or user smartcard within 1 business day after receipt of order	N/A	$200.50
STS-DSK	Provides a new configuration or user diskette within 5 business days after receipt of order	N/A	$45.34
	Managed Kit Pricing (20)		
MK-SoftClient -01 MK-SoftClient -1000 MK-SoftClient -5000 MK-SmartClient -01 MK-SmartClient -1000 MK-SmartClient -5000 MK-Speed -01 MK-Speed -500 MK-Speed -1000 MK-HSSpeed-01 MK-HSSpeed-500 MK-HSSpeed-1000 STS-CRD STS-CRD-EXP STS-DSK	Client Managed Service for Users Implementing VPN Software Managed Kit 1-999 accounts	$30.83	N/A
	Client Managed Service for Users Implementing VPN Software Managed Kit 1,000-4,999 accounts	$25.69	N/A
	Client Managed Service for Users Implementing VPN Software Managed Kit 5,000 accounts or more	$20.55	N/A
	Smart Client Managed Service for Users Implementing VPN Software Managed Kit 1-999 accounts	$35.97	N/A
	Smart Client Managed Service for Users Implementing VPN Software Managed Kit 1,000-4,999 accounts	$30.83	N/A
	Smart Client Managed Service for Users Implementing VPN Software Managed Kit 5,000 accounts or more	$25.69	N/A
	VPN Gateway Managed Kit for Fixed Site VPN Service 1-499 accounts	$565.24	N/A
	VPN Gateway Managed Kit for Fixed Site VPN Service 500-999 accounts	$477.88	N/A
	VPN Gateway Managed Kit for Fixed Site VPN Service 1,000 accounts or more	$395.67	N/A
	High Speed VPN Gateway Managed Kit for Fixed Site VPN Service 1-499 accounts	$656.59	N/A
	High Speed VPN Gateway Managed Kit for Fixed Site VPN Service 500-999 accounts	$557.24	N/A
	High Speed VPN Gateway Managed Kit for Fixed Site VPN Service 1,000 accounts or more	$459.61	N/A
	Provides a new configuration or user smartcard within 5 business days after receipt of order	N/A	$79.60
	Provides a new configuration or user smartcard within 1 business day after receipt of order	N/A	$200.50
	Provides a new configuration or user diskette within 5 business days after receipt of order	N/A	$45.34
	Product Support (21)		
SUPPORT-C	Telephone Support for Client Products - per incident (22)	N/A	$125.94
SUPPORT-S	Telephone Support for SafeNet Products - per incident (22)	N/A	$201.51
SUPPORT-L	Telephone Support for SafeNet Products - per incident (22)	N/A	$302.27
UPGRADES	Out of Warranty Hardware and software minor release firmware upgrade. (23)	N/A	$478.59
INSTALL	On-Site Installation (24)	N/A	$1,209.07
ONSITE/NWK	On-Site Network Support (24)	N/A	$1,209.07
ONSITE/ENG	On-Site Engineering Support (24)	N/A	$1,511.34
CLASS-CUS	Customer System Seminars at Customer Site (24)	N/A	$2,518.89
CLASS-CSS	Customer System Seminars at SafeNet Site	N/A	$1,511.34

NOTES:

(1) Complete system includes workstation, mouse, keyboard, monitor, underlying operating system and database software, preloaded with appropriate SSC software and includes local encryption module, smartcard reader/writer with power supply, 2 smartcards and technical reference manuals.

(2) One Pentium workstation running Safenet Security Center application software, Windows NT and SQL server database software. Provides VPN management, policy and database functionality for up to 5,000 users.

(3) This is a Redundant server configuration for organizations requiring hot backup and automatic failover capabilities. The secondary database server provides hot backup and automatic failover capabilities to the primary database server for up to 10,000 users.

(4) This is part of the SafeNet Enterprise Manager offer which meets the VPN requirements of up to 40,000 users. The Primary Policy database is a dual Pentium workstation running Windows NT and SQL Server database software, which provides CA services and database services only. The Secondary Policy database provides hot backup and automatic failover of database services. The SafeNet Policy Server is a Pentium workstation running Windows NT Workstation to provide VPN functionality to up to 5,000 users per workstation.

(5) Bundles include S/SC software, technical reference manuals and, when required, local encryption module, smartcard reader/writer with power supply and 2 smartcards. Customer must supply workstation, mouse, keyboard, monitor and underlying operating system and database software. Customer supplied items must be SafeNet certified. Requirements for customer supplied items vary and may change without notice.

(6) Bundle includes bulk smartcard feature for automated creation of User Authentication and Configuration smartcards and customizable pin mailer feature. An Eltron Model 300 Card Printer with Smartcard programming capability and 30,000 blank pin mailers are included.

(7) Includes 2 "In House Technical Support" days and configuration or failure report. Additional time may be required at $1,000 per day. Required with purchase of any sotware bundle described in Note 5 above.

(8) All VPN gateway encryptors provide packet filtering for TCP/IP Ethernet to router connections, continuous packet authentication and IPSec. Includes C-18 configuration cable, C22x crossover cable and Smartcard.

(9) Includes power board, firmware and softare upgrade.

(10) Includes firmware and software upgrade.

(11) Provides continuous packet authentication, user authentication, random password generation and data encryption.

(12) Compact Serial Port Reader for Desktop PCs. For use with Windows NT 4.0 and Windows 95/98. Includes wall mount power supply and Smartcard. Provides continuous packet authentication, Smartcard user authentication, random password generation and data encryption.

(13) PCMCIA Smartcard Reader for Notebook PC users. Requires Type II or Type III PC Card slot. For use with Windows NT 4.0 and Windows 95/98. Includes Smartcard.

(14) SafeNet Dial Products are portable hardware encryptors that provide continuous packet authentication, smartcard user authentication, random password generation and data encryption. Smartcard may be required for user authentication and/or configuration.

(15) Includes integrated V.34 modem, wall mount power supply.

(16) Includes two DB9 to DB25 adapters and notebook PC power cable. Requires customer supplied non-encrypting modem.

(17) SafeNet Soft-PK is a Windows 95,98,NT, IPSec compliant TDES pidlic key encryption and authentication utility. Electronic delivery of Soft-PK only (without license) is available at no additional charge. Use Part No. SIP-SOFTPK-EV.

(18) This is an interoperable software encryption VPN client securing communication from client-to-client or client-to-gateway. It is complient with Windows 95,98, 2000, Professional, ME and NT4.0. It supports L2TP, XAUTH, RSA SecurID, Radius and SCEP as well as firewall standards MSCAPI and ISO7816. It is certified by ICSA for IPSec.

(19) SafeNet Trusted Services Managed VPN Security Service provides consultation with customers to define security policy, security administration, security logistics and monitoring for security alerts and telephone support.

(20) SafeNet Trusted Services Managed Kit Security Service provides consultation with customers to define security policy, security administration, security logistics, appropriate product and monitoring for security alerts and telephone support. Product shipping is FOB destination and shipping charges apply as shown in the table entitled "Shipping Charges for Safenet Managed Kit Products".

(21) Three levels of product support are available: extended, plus and limited maintenance. These optional maintence plans are available for a minimum fee of $1,500 each and are detailed in the section entitled "Purchased & Maintenance Agreement".

(22) Telephone support outside of normal business hours is available for Client Products, SafeNet Products and Legacy Products for 150% of the price of telephone support for the applicable product. Out of warranty repair or replacement of products is available for 50% of the price of the applicable product.

(23) Customer installation required.

(24) Travel and Expenses will also apply.

(25) Upgrade allowances are as follows:

- Upgrade from version 3 SSC-WS or S/SC-SW to S/SC with Redundancy or SafeNet Enterprise Manager Configurations: $5,000.00 credit towards purchase of workstation or software bundle

- Upgrade from version 3 SSC with Redundancy to SafeNet Enterprise Manager Configurations: Free software upgrade to SafeNet Policy Server. Only Primary Policy Database and Secondary Policy Database must be purchased.

- N/A = Not Applicable

- Pricing valid for one or more application. Custom pricing is available for more than one application and it will not be worse than pricing for one application.

SafeNet Shipping Charges

Item	Total Monthly Recurring	Non-Re curring
Standard Shipping - Managed Kit VPN Gateway	N/A	$25.49
Standard Shipping - Managed Kit Client	N/A	$5.54
Standard Shipping - Miscellaneous Services 2nd	N/A	$5.54
Day Shipping - Managed Kit VPN Gateway 2nd	N/A	$38.79
Day Shipping - Managed Kit Client 2nd Day	N/A	$12.19
Shipping - Miscellaneous Services Expedited	N/A	$12.19
Shipping - Managed Kit VPN Gateway Expedited	N/A	$66.50
Shipping - Managed Kit Client Expedited	N/A	$26.60
Shipping - Miscellaneous Services N/A = Not	N/A	$26.60
Applicable		

SafeNet Purchased and Maintenance Agreement

Standard maintenance is included at no additional cost with hardware purchase and includes one year of support, hardware repair or replacement within 21 days of receipt of defective hardware, telephone support during normal business hours and electronic delivery of software patches. Extended, Plus and Limited maintenance plans are available at a minimum fee of $1,500 each. The table below summarizes the plans offered:

	Standard	*Extended*	*Limited*	*Plus*
SW	__	1 year	1 year	1 yr.
HW	1 year	1 year	1 year	1 yr.
Repair/Replace (from receipt of product)	21 days	21 days	21 days	24 hr.*
Phone Support	Business hours	Business hours	**	24 hours
Patches & Dot Upgrades	Electronic delivery, patches only	Electronic delivery, patches only	Electronic delivery, patches only	Electronic delivery, patches and dot upgrades
Major Upgrades	None	None	None	Special PMA pricing
Cost	With product	10% MSRP (20% Legacy Products)	7% MSRP (10% Legacy Products)	15% of MSRP (30% Legacy Products)

* Advanced unit shipments are possible as a courtesy on an as-available, case-by-case basis.
** See items Support-C, Support-S, Support-L, Support-EXP in "SafeNet Virtual Network Price Plan" for the applicable Support pricing below for Telephone Support

Managed Token Service Subscription Service

Total # of Users	*Monthly per User*
0-250	$8.80
251-500	$8.06
501-1,000	$7.32
1,001-5,000	$6.99
5,001 - 25,000	$6.62

Discounts are available for quantities of more than 25,000.

	Adv Ace Server v5.0		**SecurCare Extended ANNUAL Maintenance**	
Total # of Users		**GSA Price**		**GSA Price**
1 - 25		$4,642.32		$1,679.76
26 - 50		$7,150.75		$2,053.93
50 - 100		$10,956.93		$3,146.42
101 - 150		$14,345.04		$4,119.85
151 - 250		$19,509.95		$5,602.52
251 - 500		$30,658.50		$8,803.96
501 - 750		$40,570.25		$11,650.25
751 - 1,000		$48,304.55		$13,871.24
1,001 - 1,500		$62,910.89		$18,066.13
1,501 - 2,000		$76,315.27		$21,914.86
2,001 - 2,500		$88,186.73		$25,324.40
2,501 - 3,500		$110,527.36		$31,739.28
3,501 - 5,000		$139,339.38		$40,013.00
5,001 - 7,500		$182,252.57		$52,336.55
7,501 - 10,000		$222,936.04		$64,018.80
10,001 - 15,000		$298,659.04		$85,763.58
15,001 - 20,000		$364,505.13		$104,672.09
20,001 - 25,000		$418,009.43		$120,037.00
25,001 - 30,000		$466,801.73		$134,048.29
30,001 - 40,000		$559,691.75		$160,722.29
40,001 - 50,000		$650,230.12		$186,721.99

The prices quoted above are based on the following assumptions:

	2 year Token		3 year Token		4 year Token		5 year Token	
Total # of Users		**GSA Price**		**GSA Price**		**GSA Price**		**GSA Price**
1 - 250		$46.49		$57.65		$68.81		$79.96
251 - 500		$45.56		$56.72		$67.41		$78.11
501 - 750		$45.10		$55.79		$66.95		$77.18
751 - 1,000		$44.63		$55.33		$66.02		$76.25
1,001 - 1,500		$44.17		$54.86		$65.55		$74.39
1,501 - 2,000		$43.70		$54.40		$65.09		$73.46
2,001 - 2,500		$43.24		$53.93		$64.63		$71.59
2,501 - 3,500		$42.77		$53.47		$64.16		$70.66
3,501 - 5,000		$42.31		$53.00		$63.70		$69.74
5,001 - 7,500		$41.85		$52.07		$62.30		$68.81
7,501 - 10,000		$40.92		$50.68		$60.44		$66.95
10,001 - 15,000		$39.52		$48.81		$57.65		$65.09
15,001 - 20,000		$38.12		$46.49		$53.93		$62.30
20,001 - 25,000		$36.26		$43.70		$52.07		$60.44
25,001 - 30,000		$34.40		$42.77		$50.22		$58.58
30,001 - 40,000		$32.55		$39.99		$48.35		$55.79
40,001 - 50,000		$29.76		$35.80		$42.77		$49.28
Replace Tokens Lost/Broken		$46.49		$57.65		$68.81		$79.96

- All Tokens are purchased at the same time on a single purchase order and are billed on a single invoice.
- If shipping tokens to International locations postage will be passed through to the customer
- Maintenance is an Annual Charge

Example Bundled Offers:

For 500 Users, under a 3 year contract:	First Year Charges	2005 Annual and Renewal Charges	2006 Annual and Renewal Charges
Advanced Ace Server	$30,658.50		
Secure Care Extended 7X24 Maintenance Service for 500 Users	$8,803.96	$8,803.96	$8,803.96
500 3-year Tokens	$28,360.00	$48,360.00	
12 Months of AT&T Managed Service for 500 users	$48,360.00		$48,360.00
Total	$116,182.46	$57,163.96	$57,163.96

For 250 Users, under a 3 year contract:	First Year Charges	2005 Annual and Renewal Charges	2006 Annual and Renewal Charges
Advanced Ace Server	$19,509.95	-	
Secure Care Extended 7X24 Maintenance Service for 250 Users	$5,602.52	$5,602.52	$5,602.52
250 3-year Tokens	$14,412.50	-	
12 Months of AT&T Managed Service for 250 users	$26,400.00	$26,400.00	$26,400.00
Total	**$65,924.97**	**$32,002.52**	**$32,002.52**

For 100 Users, under a 3 year contract:	First Year Charges	2005 Annual and Renewal Charges	2006 Annual and Renewal Charges
Advanced Ace Server	$10,956.93	-	
Secure Care Extended 7X24 Maintenance Service for 100 Users	$3,146.42	$3,146.42	$3,146.42
100 3-year Tokens	$5,765.00	-	
12 Months of AT&T Managed Service for 100 users	$10,560.00	$10,560.00	$10,560.00
Total	**$30,428.35**	**$13,706.42**	**$13,706.42**

AT&T Site Labor Category

GSA Labor Category	2/22/04 - 2/21/05	2/22/05 - 2/21/06	2/22/06 - 2/21/07	2/22/07 - 2/21/08	2/22/08 -2/21/09
0001: Systems Analyst/Programmer	$83.13	$86.04	$89.06	**$92.17**	**$95.40**
0002: Senior Systems Analyst/Programmer	$101.21	$104.75	$108.42	**$112.21**	**$116.14**
0003: Principal Engineer/Analyst	$143.38	$148.40	$153.60	**$158.97**	**$164.54**
0004: Associate Manufacturing Systems Engineer	$84.87	$87.84	$90.91	**$94.09**	**$97.39**
0005: Senior Manufacturing Systems Engineer	$112.13	$116.05	$120.11	**$124.32**	**$128.67**
0006: Principal Manufacturing Systems Engineer	$140.15	$145.06	$150.13	**$155.39**	**$160.83**

0007: Information Security Analyst	$95.01	$98.34	$101.78	**$105.34**	**$109.03**
0008: Senior Information Security Specialist	$120.50	$124.72	$129.08	**$133.60**	**$138.28**
0009: Principal Information Security Specialist	$153.18	$158.54	$164.09	**$169.83**	**$175.77**
0010: Senior Engineer/Scientist/Analyst	$153.18	$158.54	$164.09	**$169.83**	**$175.77**
0011: Principal Staff Scientist/Engineer/Analyst	$176.70	$182.89	$189.29	**$195.91**	**$202.77**
0012: Senior Corporate Consultant	$209.46	$216.79	$224.38	**$232.23**	**$240.36**
0013: Telecommunications Technician	$66.37	$68.69	$71.10	**$73.59**	**$76.16**

GSA Labor Category	2/22/04 - 2/21/05	2/22/05 - 2/21/06	2/22/06 - 2/21/07	2/22/07 - 2/21/08	2/22/08 -2/21/09
0014: Network Engineer	$149.23	$154.45	$159.86	**$165.45**	**$171.24**
0015: Network Architect	$192.21	$198.93	$205.90	**$213.10**	**$220.56**
0016: Network Consultant	$240.30	$248.71	$257.42	**$266.43**	**$275.75**
0017: Technology Updates Applications Support Technician	$78.60	$81.35	$84.20	**$87.15**	**$90.20**
0018: Technology Updates Applications Systems Analyst	$104.79	$108.46	$112.26	**$116.19**	**$120.25**
0019: Supplemental PKI Services Applications Support Technician	$78.60	$81.35	$84.20	**$87.15**	**$90.20**
0020: Supplemental PKI Services Applications Systems Analyst	$104.79	$108.46	$112.26	**$116.19**	**$120.25**
0021: PKI Professional Consultant	$295.08	$305.41	$316.10	**$327.16**	**$338.61**
0022: Forms Designer	$147.71	$152.88	$158.23	**$163.77**	**$169.50**
0023: E-commerce Forms Consultant	$187.09	$193.64	$200.42	**$207.43**	**$214.69**
0024: Forms System Security Architect	$226.47	$234.40	$242.60	**$251.10**	**$259.88**
0025: Forms Project Manager	$271.78	$281.29	$291.14	**$301.33**	**$311.87**
0026: Forms Management Consultant	$317.07	$328.17	$339.66	**$351.55**	**$363.85**
0027: Task Order Proj ect Manager	$149.24	$154.46	$159.87	**$165.47**	**$171.26**

190

GSA Labor Category	2/22/04 - 2/21/05	2/22/05 - 2/21/06	2/22/06 - 2/21/07	2/22/07 - 2/21/08	2/22/08 -2/21/09
0028: Technical Project Lead	$169.04	$174.95	$181.08	**$187.41**	**$193.97**
0029: Technology Advisor	$246.51	$255.14	$264.07	**$273.31**	**$282.88**
0030: Information Systems Analyst	$155.96	$161.41	$167.06	**$172.91**	**$178.96**
0031: Technology Research Specialist	$161.18	$166.83	$172.66	**$178.71**	**$184.96**
0032: Systems Security Engineer	$188.92	$195.53	$202.38	**$209.46**	**$216.79**
0033: Customer Service Representative	**30.73**	**$31.81**	**$32.92**	**$34.08**	**$35.27**
0034: Video Teleconferencing Communications Technician	**96.39**	**$99.77**	**$103.26**	**$106.87**	**$110.61**
0035: Network Operations Manager	**147.52**	**$152.69**	**$158.03**	**$163.56**	**$169.29**
0036: Network Operations Supervisor	**103.65**	**$107.28**	**$111.03**	**$114.92**	**$118.94**
0037: Task Order Project Supervisor	**103.65**	**$107.28**	**$111.03**	**$114.92**	**$118.94**

LABOR CATEGORY	SCHEDULE #	2/22/06 - 2/21/07 GSA CONTRACT RATE	2/22/07 - 2/21/08 GSA CONTRACT RATE	2/22/08 -2/21/09 GSA CONTRACT RATE
Associate Systems Analyst/Programmer	0038	$60.02	$62.12	$64.29
Documentation / Administration Support Specialist	0039	$38.66	$40.01	$41.41
Junior Technical Writer	0040	$49.36	$51.09	$52.88
Training Support Specialist	0041	$51.22	$53.01	$54.87
Junior Systems Analyst	0042	$45.86	$47.47	$49.13
Staff Logistician, Mid Level	0043	$89.34	$92.47	$95.71
Senior Logistician	0044	$103.29	$106.91	$110.65

NOTE: Charges associated with performance outside of the 48 contiguous states and the District of Columbia, such as, but not limited to, liability, insurance and housing, will be quoted as other direct costs on a task order basis. Additional terms and conditions may be added as mutually agreed to, with agency customers on a task order basis.

Government Site GSA Labor Category

Note: These Government Site Rates Are Avialable only for Task lasting more than 180 continuous days conducted In Government Facilities

Government Site GSA Labor Category	2/22/04 - 2/21/05	2/22/05-2/21/06	2/22/06 - 2/21/07	12/22/07 - 2/21/08	2/22/08 - 2/21/09
0001: Systems Analyst/Programmer	$66.50	$68.83	$71.24	$73.73	$76.31
0002: Senior Systems Analyst/Programmer	$80.97	$83.81	$86.74	$89.78	$92.92
0003: Principal Engineer/Analyst	$114.71	$118.72	$122.88	$127.18	$131.63
0004: Associate Manufacturing Systems Engineer	$67.89	$70.27	$72.73	$75.27	$77.91
0005: Senior Manufacturing Systems Engineer	$89.71	$92.85	$96.10	$99.46	$102.94
0006: Principal Manufacturing Systems Engineer	$112.12	$116.04	$120.10	$124.31	$128.66
0007: Information Security Analyst	$76.01	$78.67	$81.42	$84.27	$87.22
0008: Senior Information Security Specialist	$96.40	$99.78	$103.27	$106.88	$110.62
0009: Principal Information Security Specialist	$122.54	$126.83	$131.27	$135.86	$140.62
0010: Senior Engineer/Scientist/Analyst	$122.54	$126.83	$131.27	$135.86	$140.62
0011: Principal Staff Scientist/Engineer/Analyst	$141.37	$146.31	$151.43	$156.73	$162.22
0012: Senior Corporate Consultant	$167.57	$173.43	$179.50	$185.79	$192.29
0013: Telecommunications Technician	$53.09	$54.95	$56.87	$58.86	$60.92
0014: Network Engineer	$119.39	$123.56	$127.89	$132.36	$137.00
0015: Network Architect	$153.76	$159.14	$164.71	$170.48	$176.45
0016: Network Consultant	$192.24	$198.97	$205.93	$213.14	$220.60
0017: Technology Updates Applications Support Technician	$62.89	$65.09	$67.36	$69.72	$72.16
0018: Technology Updates Applications Systems Analyst	$83.84	$86.77	$89.81	$92.95	$96.21

Government Site GSA Labor Category	2/22/04 - 2/21/05	2/22/05 - 2/21/06	2/22/06 - 2/21/07	2/22/07 - 2/21/08	2/22/08 - 2/21/09
0019: Supplemental PKI Services Applications Support Technician	$62.89	$65.09	$67.36	$69.72	$72.16
0020: Supplemental PKI Services Applications Systems Analyst	$83.84	$86.77	$89.81	$92.95	$96.21
0021: PKI Professional Consultant	$236.07	$244.33	$252.88	$261.73	$270.89
0022: Forms Designer	$118.16	$122.30	$126.58	$131.01	$135.59
0023: E-commerce Forms Consultant	$149.67	$154.91	$160.33	$165.94	$171.75
0024: Forms System Security Architect	$181.18	$187.52	$194.08	$200.88	$207.91
0025: Forms Project Manager	$217.42	$225.03	$232.90	$241.06	$249.49
0026: Forms Management Consultant	$119.40	$123.58	**$127.90**	$132.38	$137.01
0027: Task Order Project Manager	$135.23	$139.97	$144.87	$149.94	$155.18
0028: Technical Project Lead	$197.21	$204.12	$211.26	$218.66	$226.31
0029: Technology Advisor	$124.77	$129.13	$133.65	$138.33	$143.17
0030: Information Systems Analyst	$128.95	$133.46	$138.13	$142.97	$147.97
0031: Technology Research Specialist	$151.14	$156.43	$161.90	$167.57	$173.43
0032: Systems Security Engineer	$253.66	$262.54	$271.73	$281.24	$291.08
0033: Customer Service Representative	$30.73	$31.81	$32.92	$34.08	$35.27
0034: Video Teleconferencing Communications Technician	$96.39	$99.77	$103.26	$106.87	$110.61
0035: Network Operations Manager	$147.52	$152.69	$158.03	$163.56	$169.29
0036: Network Operations Supervisor	$103.65	$107.28	$111.03	$114.92	$118.94
0037: Task Order Project Supervisor	$103.65	$107.28	$111.03	$114.92	$118.94

Government Site Rates

LABOR CATEGORY	SCHEDULE #	GSA CONTRACT RATE 2/22/06 - 2/21/07	GSA CONTRACT RATE 2/22/07 - 2/21/08	GSA CONTRACT RATE 2/22/08 - 2/21/09

Associate Systems Analyst/Programmer	0038	$60.02	$62.12	$64.29
Documentation / Administration Support Specialist	0039	$38.66	$40.01	$41.41
Junior Technical Writer	0040	$49.36	$51.09	$52.88
Training Support Specialist	0041	$51.22	$53.01	$54.87
Junior Systems Analyst	0042	$45.86	$47.47	$49.13
Staff Logistician, Mid Level	0043	$89.34	$92.47	$95.71
Senior Logistician	0044	$103.29	$106.91	$110.65

NOTE: Charges associated with performance outside of the 48 contiguous states and the District of Columbia, such as, but not limited to, liability, insurance and housing, will be quoted as other direct costs on a task order basis. Additional terms and conditions may be added as mutually agreed to, with agency customers on a task order basis.

MNFR Name	SIN	Part Number	GSA Price w/fee
RPost	132-52	Basic-	
RPost	132-52	Single	
RPost	132-52	Basic-10	
RPost	132-52	Basic-50	
RPos t	132-52	Basic-100	
RPost	132-52	Basic-200	
RPost	132-52	Basic-500	
RPost	132-52	Basic-Plus	

RPost 132-52 Active-Single

RPost 132-52 Active-5

RPost 132-52 Active-10

RPost 132-52 Active-50

RPost 132-52 Active-100

RPost 132-52 Active-200

RPost 132-52 Active-500

RPost 132-52 Active-Plus

Description

Service Packages

Basic Service Package - Monthly Recurring Charges. Includes:
-Up to 200 Registered e-Mail addressees per seat per month, or up to 100 megabytes of data transmitted or received per seat, whichever is reached first.
-Registered e-Mail usage is aggregated for all enterprise users within the account.

Basic Service Package Enterprise License: <100/Seats-1-99 Seats
Basic Service Package Enterprise License: Sold in Seat Blocks of 100 Seats. 1-5 Seat Blocks (100-500 Seats)
Basic Service Package Enterprise License: Sold in Seat Blocks of 100 Seats. 6-10 Seat Blocks (501-1000 Seats)
Basic Service Package Enterprise License: Sold in Seat Blocks of 100 Seats. 11-50 Seat Blocks (1,001-5,000 Seats)
Basic Service Package Enterprise License: Sold in Seat Blocks of 100 Seats. 51-100 Seat Blocks (5,001-10,000 Seats)
Basic Service Package Enterprise License: Sold in Seat Blocks of 100 Seats. 101-200 Seat Blocks (10,001-20,000 Seats)
Basic Service Package Enterprise License: Sold in Seat Blocks of 100 Seats. 201-500 Seat Blocks (20,001-50,000 Seats)
Basic Service Package Enterprise License: Sold in Seat Blocks of 100 Seats. 501+ Seat Blocks (50,001 Seats and above)

Active Service Package - Monthly Recurring Charges. Includes:
- Up to 400 Registered e-Mail addressees per seat per month, or up to 200 megabytes of data transmitted or received per seat, whichever is reached first.
- Registered e-Mail usage is aggregated for all users within the account.

Active Service Package Enterprise License: <100/Seats-1-99 Seats (per seat)
Active Service Package Enterprise License: Sold in Seat Blocks of 100 Seats. 1-5 Seat Blocks (100-500 Seats)
Active Service Package Enterprise License: Sold in Seat Blocks of 100 Seats. 6-10 Seat Blocks (501-1000 Seats)
Active Service Package Enterprise License: Sold in Seat Blocks of 100 Seats. 11-50 Seat Blocks (1,001-5,000 Seats)
Active Service Package Enterprise License: Sold in Seat Blocks of 100 Seats. 51-100 Seat Blocks (5,001-10,000 Seats)
Active Service Package Enterprise License: Sold in Seat Blocks of 100 Seats. 101-200 Seat Blocks (10,001-20,000 Seats)
Active Service Package Enterprise License: Sold in Seat Blocks of 100 Seats. 201-500 Seat Blocks (20,001-50,000 Seats)
Active Service Package Enterprise License: Sold in Seat Blocks of 100 Seats. 501+ Seat Blocks (50,001 Seats and above)

	Warranty	COO
$24.46	90 DAYS	US
$2,324.15	90 DAYS	US
$2,201.83	90 DAYS	US
$2,079.50	90 DAYS	US
$1,957.18	90 DAYS	u
$1,834.86	90 DAYS	u
$1,712.53	90 DAYS	u
$1,590.21	90 DAYS	u

$34.25	90 DAYS	US
$3,253.81	90 DAYS	US
$3,082.56	90 DAYS	US
$2,911.30	90 DAYS	US
$2,740.05	90 DAYS	u
$2,568.80	90 DAYS	u
$2,397.54	90 DAYS	u
$2,226.29	90 DAYS	u

RPOST

MNFR Name	SIN	Part Number	Description		GSA Price w/fee	Warranty	COO
			Premium Service Package: Monthly Recurring Charges. Includes: - Up to 1,000 Registered e-Mail addressees per seat per month or up to 500 megabytes of data transmitted and received per seat, whichever is reached first. - Registered e-Mail usage is aggregated for all enterprise users within the account.				
RPost	132-52	Premium-Single	Premium Service Package Enterprise License:	<100/Seats-1-99 Seats (per seat)	$44.04	90 DAYS	US
RPost	132-52	Premium-10	Premium Service Package Enterprise License: Blocks (100-500 Seats)	Sold in Seat Blocks of 100 Seats. 1-5 Seat	$4,183.47	90 DAYS	US
RPost	132-52	Premium-50	Premium Service Package Enterprise License: Blocks (501-1000 Seats)	Sold in Seat Blocks of 100 Seats. 6-10 Seat	$3,963.29	90 DAYS	US
RPost	132-52	Premium-100	Premium Service Package Enterprise License: Blocks (1,001-5,000 Seats)	Sold in Seat Blocks of 100 Seats. 11-50 Seat	$3,743.10	90 DAYS	US
RPost	132-52	Premium-200	Premium Service Package Enterprise License: Seat Blocks (5,001-10,000 Seats)	Sold in Seat Blocks of 100 Seats. 51-100	$3,522.92	90 DAYS	US
RPost	132-52	Premium-500	Premium Service Package Enterprise License: Seat Blocks (10,001-20,000 Seats)	Sold in Seat Blocks of 100 Seats. 101-200	$3,302.74	90 DAYS	US
RPost	132-52	Premium-Plus	Premium Service Package Enterprise License: Seat Blocks (20,001-50,000 Seats)	Sold in Seat Blocks of 100 Seats.201-500	$3,082.56	90 DAYS	u
			Premium Service Package Enterprise License: Blocks (50,001 Seats and above)	Sold in Seat Blocks of 100 Seats. 501+ Seat	$2,862.37	90 DAYS	u
			Basic Bulk Utility Pricing				
Rpost	132-52	Bulk	Basic Bulk: $0.25 per e-mail addressee per *V2* megabyte (individual e-mails sent from dedicated account). Installation package required.		$0.24	N/A	US
			Installation Packages				
RPost	132-52	Install-Standard	**Standard Installation:** Includes - Enterprise service installed per mail server. All users on mail server enabled for service. A basic assessment (off-site), filter license, installation instructions, and an e-mail awareness campaign. Price is based per server. (Available on following servers: Microsoft Exchange 2000, QMail, Sendmail)				
RPost	132-52	Install-Fitted	**Custom Installation:** Includes - Enterprise service installed per mail server. All users on mail server enabled for service. A basic assessment (off-site), filter license, installation instructions, and an e-mail awareness campaign. Price is based per server. Solution for non-standard mail servers.				
RPost	132-52	Install-Advanced	**Advanced Installation:** Includes - Enterprise service installed per mail server with management module that enables the e-mail administrator to select or exclude individual users from service. A basic assessment (off-site), filter license, installation instructions, and an e-mail awareness campaign. Price is based per server.				
RPost	132-52	Install-Premium	**Premium Installation:** Includes - Enterprise service installed per mail server with client-specific and/or **For Official Use Only** License. This License provides the client with enhanced Official Registered e-Mail service, private labeled for the client. Enables administrator to set the system to handle **For Official Use Only** e-mail with the proper markings and storage capabilities. Premium Installation is a one time fee **in addition to a**				

s e l e c t e d i n s t a l l a t i

			on package and a selected storage package.			
				$4,892.95	N/A	US
				$9,785.89	N/A	US
					N/A	
				$14,678.84 $48,929.47	N/A	US **US**

MNFR Name	SIN	Part Number	Description	GSA Price w/fee	Warranty	COO
			Storage Options for "For Official Use Only" Registered e-Mail			
RPost	132-52	Storage-Standard	Standard Storage Package - Installation of Registered Messaging Storage to the RPost storage infrastructure	$2,935.77	N/A	US
RPost	132-52	Storage Block	Storage Blocks - 5000 MB per block per month	$2,446.47	N/A	US
RPost	132-52	Premium Storage	**Premium Storage Package** - Installation of Registered Messaging secondary receipt delivery to be sent to client's designated central storage facility. One time set up fee.	$9,785.89	N/A	US
			Additional Services - May be purchased only in conjunction with RPost Service Packages, installation packages, and storage packages. Labor Categories			
RPost	132-52	RP-PM01	RPost Project Manager (Per Hour) - Three to five (3-5) years project management experience using internet, intranet, and/or e-commerce technologies. - Superior understanding of the RPost system and Registered e-Mail installation process. - Extensive knowledge of e-mail systems and integration issues for standard and non-standard mail server installations. - Experience using industry standard project management methodologies and tools. - Very good supervisory and leadership skills. - Very good communication and presentation skills. - Very good documentation skills. - Industry standard qualification (eg. Cisco Certification, CISSP, MSCE)	$195.72	N/A	US

RPost	132-52	RP-TD01	RPost Technical Director (Per Hour) - Three to seven (3-7) years experience managing, directing and supervising the design and development of medium to large computing projects and complex applications. - Extensive knowledge of the network, software, and hardware issues involved with providing Registered e-Mail services in an enterprise environment. - A broad technical knowledge of a wide variety of e-mail systems - Ability to make technical decisions on whether to provide service with specific filters, user management modules, or universal hardware/software filter systems. - Provides management and supervision of technical architecture and programming resources during the execution of complex technical solutions. - Excellent customer interaction skills. - Excellent supervisory and leadership skills. - Excellent communication and presentation skills. - Excellent documentation skills. -Bachelors Degree in Business or Computer related field.	$269.11	**N/A**	**US**

MNFR Name	SIN	Part Number	Description	GSA Price w/fee	Warranty	COO
RPost	132-52	RP-SE01	RPost Senior Software Engineer (Per Hour) - Four to six (4-6) years technical experience developing complex e-mail applications. - Provides lead/senior level technical expertise and programming resources to execute complex technical solutions to customize a Registered e-Mail installation for an enterprise. - Extensive knowledge of the RPost system, digital signatures, e-mail management and e-mail filtering. - Bachelors Degree in Computer Science	$171.25	N/A	US
RPost	132-52	RP-SE02	RPost Software Engineer (Per Hour) - Two to three (2-3) years of technical experience developing complex e-mail applications. - Provides technical experience and programming resources to execute a technical solution that customizes a Registered e-Mail installation for an enterprise. - Knowledge of the RPost system, digital signatures, e-mail management and e-mail filtering.	$146.79	N/A	US
RPost	132-52	RP-SY01	Systems Engineer/ Integrator (per hour)RPost Systems Engineer / Integrator (Per Hour) - Thee to four (3-4) years of senior level technical experience designing and implementing complex enterprise level integration solutions. - Significant experience and understanding of the RPost products, Registered e-Mail systems, and Registered e-Mail filters. - Extensive knowledge of secure network connections to the RPost National Mail Server infrastructure and integration into enterprise billing/reporting systems. - Extensive experience in networking/Infrastructure, application integration, security, and		-Bachelor Degree or Industry standard qualification (eg. Cisco Certification, CISSP, MCSE)		t i o n .

$220.18				N/A	US	
RPost	132-52	RP-QA01	RPost Quality Assurance Manager (Per Hour) - Three (3) years of technical management experience directing and supervising the design and development of test plans and programs for execution of unit, functional, and system acceptance testing. - Experience testing Registered e-Mail service installations and service functionality. - Provides management and supervision of the Quality Assurance process as well as the processes and procedures used to ensure accuracy and completeness of all RPost Interactive final deliverables.	$195.72	N/A	US
RPost	132-52	RP-OP01	RPost Hosting Operations Center Engineer (Per Hour) - Three (3) years of technical experience that applies to systems analysis and design techniques for complex computer systems. - Experience in all phases of systems analysis techniques, concepts and methods - Knowledge of hardware, system software, input/output devices, structure and management practices. - Experience with the enterprise client hardware, network, software, and hosting requirements for Registered e-Mail and qualified hosting in RPost Data Centers. - Significant experience and understanding of the RPost products. - Industry standard qualification (eg. Cisco Certification, CISSP, MSCE)	$205.50	N/A	US

T/INFR Name	SIN	Part Number	Description	GSA Price w/fee	Warranty	COO
RPost	132-52	RP-SU01	RPost On-site Support Technician (Per Hour) - Extensive knowledge of e-mail systems and integration issues for standard and non-standard mail server installations. - Extensive knowledge of RPost software and services. - Provides on-site technical assistance. - Provides on-site system instruction.	$244.65	N/A	US
			Support Packages			
RPost	132-52	Basic Support	**Basic Customer Support Package** - per mail server annually. E-mail support: Mean Time To Repair - 24 hours, available 7 days a week. Telephone Support (2 phone calls per month not to exceed 1 hour per call) - 7AM x 7PM EST Monday through Friday	$733.94	N/A	US
RPost	132-52	Premium Support	**Premium Customer Support Package** - per mail server annually E-mail support: Mean Time To Repair -12 hours, available 7 days a week Interactive Web Support - 7AM x 7PM EST Monday through Friday Telephone Support -Unlimited calls 7AM x 7PM EST Monday through Friday	$1,761.46	N/A	US

AGMEMS Software Pricing

	Total Price NRC	Total Price MRC
AGMEMS Standard Middleware Right to Use License Fee	$282,603.75	$5,239.00
AGMEMS Disaster Recovery Middleware Right to Use License Fee*	**$141**,301**.88**	**$2,61**9.50
AGMEMS Short Stack Middleware Right to Use License Fee**	$98,911.31	$1,833.65
AGMEMS Lite Middleware Right to Use License Fee**	$70,650.94	$1,309.75

Notes:
* Includes release support for all upgrades to AGMEMS Standard integration software and documentation. It also includes technical support for AGMEMS Standard , Mon-Fri 8:00 AM to 8:00 PM EST.
** The Disaster Recovery option is only available when at least one instance of AGMEMS Standard middleware is acquired by the customer.
*** In addition to purchasing AGMEMS Standard middleware, customers can purchase specialized versions of AGMEMS (i.e., "Short Stack" and "Lite"). This option is only available when at least one instance of AGMEMS Standard middleware is acquired by the customer.

Pricing valid for one or more license. Custom pricing may be available for more than one license and it will not be worse than pricing for one license. Professional Services are available as an option. The following labor categories from SIN 132-51 of this GSA Schedule may be used in conjunction with AGMEMS at the rates shown in this GSA Schedule:

0001 System Analyst/Programmer, 0002 Senior Systems Analyst/Programmer, 0003 Principal Engineer/Analyst, 0010 Senior Engineer/Scientist/Analyst 0012 Senior Corporate Consultant, 0013 Telecommunications Technician, 0014 Network Engineer, 0015 Network Architect, 0016 Network Consultant 0017 Technology Updates Applications Support Technician, 0018 Technology Updates Applications Systems Analyst, 0027 Task Order Project Manager 0028 Technical Project Lead, 0029 Technology Advisor, 0030 Information Systems Analyst, 0031 Technology Research Specialist, 0033 Customer Service

201

Internet Protocol Telephony Pricing

Description:	Non Recurring	Monthly
Basic Configuration	$1,910,834.28	$0
Enhanced Single-Site LAN Internet Protocol Telephony:		
SmaU Configuration	$294,600.40	$0
Medium Configuration	$779,366.86	$0
Large Configuration	$1,555,523.46	$0
Maintenance Year 2 - Small Configuration	$26,082.58	$0
Maintenance Year 2 - Medium Configuration	$55,336.07	$0
Maintenance Year 2 - Large Configuration	$90,610.91	$0
Maintenance Year 3 - Small Configuration	$26,082.58	$0
Maintenance Year 3 - Medium Configuration	$55,336.07	$0
Maintenance Year 3 - Large Configuration	$90,610.91	$0

Notes:

1. IP LAN Telephony is a bundled service which is site specific. Customers may not purchase pieces of the application.
2. The price shown is for deployment of the service at one site. Discounts may apply to deployment of the service at more than one site.
3. Service capacity may be added at existing sites. Please contact your AT&T Account Representative for details.
4. Pricing includes maintenance for a 12-month period. Maintenance is not included on all components.
   Maintenance level is based on the individual component of the solution. Maintenance in Year 2 and Year 3 is at an additional charge as shown above.
5. Inside wiring is not included in the prices shown and can be provided for an additional charge. Please contact your AT&T Account. Representative for details

GSA SCHEDULE PRICING - CM-VPNS

	Units	Payment Type	Total GSA Price
AT&T Small Fixed Site managed VPN (w/ equipment)			
Small Fixed Siteil-20 users) Small Router	1	MRC	$ 364.11
Small Fixed Site (1-20 users) Small Router	1	NRC	$ 1,511.25
AT&T Medium and Large Fixed Site managed VPN (w/ equipment)			
Medium Fixed Site (21-100 users) Medium Router	1	MRC	$ 674.92
Large Fixed Site (101 + users) Large Router	1	MRC	$ 1,309.65
Medium Fixed Site (21-100 users) Medium Router	1	NRC	$ 1,511.25
Large Fixed Site (101 + users) Large Router	1	NRC	$ 1,511.25
AT&T Managed LAN			
LAN Switch at Small Fixed Site (2950-24)	1	MRC	$ 114.60
LAN Switch at Medium Fixed Site (2950-48)	1	MRC	$ 173.54
Layer 3 Switch at Large Fixed Site (3550-24)	1	MRC	$ 183.37
LAN Switch at Small Fixed Site	1	NRC	$ 654.88
LAN Switch at Medium Fixed Site	1	NRC	$ 1,088.10
Layer 3 Switch at Large Fixed Site	1	NRC	$ 1,088.10
AT&T Managed Intrusion Detection Service 100 M Ethernet			
Primary Data Center	1	MRC	$ 2,901.60
Back-up Data Center	1	MRC	$ 2,901.60
Primary Data Center	1	NRC	$0
Back-up Data Center	1	NRC	$0
AT&T Hub Site /Data Center concentrator			
High End Hub Site /Data Center concentrator	1	NRC	$ 1,511.25
Small Hub Site/Data Center concentrator	1	MRC	$ 609.34
Small Hub Site/Data Center concentrator	1	NRC	$ 1,511.25
AT&T Remote Office /Data Center concentrator			
Sub-Remote Office/Data Center concentrator	1	MRC	$ 108.05
Sub-Remote Office/Data Center concentrator	1	NRC	$ 800.96
Price Notes:			

	1. CM-VPNS is a bundled service. The individual elements shown above may not be purchased separately.			
	2. AT&T's Business Internet Service must be used in conjunction with CM-VPNS. AT&T's Business Internet Service is available under the AT&T Corp. GSA Schedule.			

General Terms and Conditions — AT&T

General Terms and Conditions

The following terms and conditions shall apply to the provision and use of the products and services (individually a "Service" and collectively the "Services") provided pursuant to the additional terms and conditions which contain more specific terms and conditions for individual services.

1 Definitions

1.1 "Affiliate" of a party means any entity that controls, is controlled by or is under common control with such party, and, in the case of AT&T, also means any entity which AT&T has authorized under contract to offer any Service or part of any Service.

1.2 "Content" means information made available, displayed or transmitted in connection with a Service (including, without limitation, information made available by means of an HTML "hot link", a third party posting or similar means) including all trademarks, service marks and domain names contained therein as well as the contents of any bulletin boards or chat forums, and, all updates, upgrades, modifications and other versions of any of the foregoing.

1.3 "User" means anyone whom CUSTOMER, i.e., the GOVERNMENT, allows, by action or omission, to use or access any Service including, without limitation, CUSTOMER'S, i.e., the GOVERNMENT'S, Affiliates.

2 Charges and Billing

2.1 The GOVERNMENT shall pay AT&T for its and Users' use of the Services at the rates and charges specified in the Additional terms and conditions, without deduction, setoff or delay for any reason, including circumstances arising under any other Additional terms and conditions. Charges set forth in the additional terms and conditions are exclusive of any applicable taxes.

2.2 The GOVERNMENT shall pay all shipping charges, taxes, consistent with FAR 52.229-3 (FEDERAL, STATE AND LOCAL TAXES) (JAN 1991), (excluding those on AT&T's net income) and other similar charges (and any related interest and penalties) relating to the sale, transfer of ownership, installation, license, use or provision of the Services, except to the extent a valid tax exemption certificate is provided by the GOVERNMENT to AT&T prior to the delivery of Services.

2.3 Payment is due within 30 days after the date of invoice, consistent with FAR 52.232-25 (PROMPT PAYMENT) (MAR 1994) and shall refer to the invoice number. Restrictive endorsements or other statements on checks accepted by AT&T will not apply. The

GOVERNMENT shall reimburse AT&T for all costs associated with collecting delinquent or dishonored payments. At AT&T's option, interest charges may be added to any past due amounts at the lower of 1.5% per month or the maximum rate allowed by law - consistent with FAR 52.232-25 (PROMPT PAYMENT) (MAR 1994).

3 Responsibilities of the Parties

3.1 AT&T shall provide Services to the GOVERNMENT in accordance with the terms and conditions and at the charges specified herein.

3.2 The GOVERNMENT represents and warrants that its and Users' use of the Services and the Content will at all times comply with all applicable laws, regulations and written and electronic instructions for use. The GOVERNMENT shall promptly resolve all claims by anyone that the GOVERNMENT's or Users' use or Content violate any laws or regulations. AT&T reserves the right to terminate affected Additional terms and conditions, suspend affected Services and/or remove the GOVERNMENT or Users' Content from the Services if AT&T (i) determines, in its sole discretion, that AT&T's public image, reputation or goodwill will be adversely affected or that such use or Content does not conform with the requirements set forth in these terms and conditions, or that AT&T could be subject to liability; or (ii) receives notice from anyone that the GOVERNMENT's or Users' use or Content may violate any laws or regulations. AT&T's actions or inaction under this Section shall not constitute review or approval of the GOVERNMENT's or Users' use or Content.

3.3 AT&T grants to the GOVERNMENT the right to permit Users to access and use the Services, provided that the GOVERNMENT shall remain solely responsible for such access and use and shall defend, indemnify and hold harmless AT&T from and against all Damages, whether or not arising out of third-party claims and regardless of the form of action, whether in contract, tort, strict liability or otherwise, concerning or relating to: any noncompliance by the GOVERNMENT or Users with any provision of these terms and conditions; negligent acts or omissions by the GOVERNMENT or Users; the GOVERNMENT's or Users' Content or use of the Services (including, without limitation, infringement of any personal or property rights); and claims by any User or affiliate of the GOVERNMENT relating to any Service failure, defect or outage.

3.4 Except to the extent required by law or expressly permitted in any additional terms and conditions, the GOVERNMENT may not resell any Services.

4 Use of Information

4.1 All documentation, technical information, Software, business information, proposals for new Services or other materials that are disclosed by either party to the other in the course of performing under these terms and conditions shall be considered proprietary

4.2 information ("INFORMATION") of the disclosing party, provided such information is in

written or other tangible form that is clearly marked as "proprietary" or "confidential", or is disclosed orally and is both identified as proprietary or confidential at the time of disclosure and summarized in a writing so marked within 15 business days following the oral disclosure. These terms and conditions shall be deemed to be AT&T INFORMATION.

4.3 Each party's INFORMATION shall, for a period of 3 years following its disclosure (except in the case of Software, for an indefinite period): (i) be held in confidence; (ii) be used only for purposes of performing under these terms and conditions and using the Services; and, (iii) not be disclosed except to the receiving party's employees, agents and contractors having a need-to-know (provided that such agents and contractors are not direct AT&T competitors and agree in writing to use and disclosure restrictions as restrictive as this Article 4) or to the extent required by law.

4.4 The restrictions in Section 4.2 shall not apply to any information that: (i) is independently developed by the receiving party; or (ii) is lawfully received by the receiving party free of any obligation to keep it confidential; or (iii) becomes generally available to the public other than by breach of these terms and conditions.

4.5 The GOVERNMENT authorizes AT&T to use the GOVERNMENT's Proprietary Network Information ("CPNI"), as defined in the Communications Act of 1934, as amended, to evaluate the GOVERNMENT's requirements and provide the GOVERNMENT information concerning products and services offered by AT&T and other companies.

4.6 The GOVERNMENT authorizes AT&T to: (i) monitor and record calls and transmissions using the Services and calls or transmissions to AT&T concerning the Services in order to detect fraud, check quality and operate, maintain and repair the Services; and (ii) disclose such information to the extent AT&T deems it is legally required.

5 Publicity and Marks

5.1 No public statements or announcements relating to these terms and conditions shall be issued by either party without the prior written consent of the other party.

5.2 Each party agrees not to display or use, in advertising or otherwise, any of the other party's trade names, logos, trademarks, service marks or other indicia of origin (collectively, "Marks") without the other party's prior written consent, provided that such consent may be revoked at any time and consent to use AT&T's Marks can only be granted by the AT&T Vice President, Corporate Identity.

6 Software

6.1 AT&T grants the GOVERNMENT a personal, non-transferable and non-exclusive license (without the right to sublicense) to use, in object code form, all software and associated written and electronic documentation and data furnished pursuant to any

Additional terms and conditions (collectively, the "Software"), solely in connection with the Services and solely in accordance with applicable written and electronic documentation. The GOVERNMENT will refrain from taking any steps to reverse assemble, reverse compile or otherwise derive a source code version of the Software. The Software shall at all times remain the sole and exclusive property of AT&T or its suppliers. "Third-Party Software" means Software that bears a copyright notice of a third party. "AT&T Software" means all Software other than Third-Party Software.

6.2 The GOVERNMENT shall not copy or download the Software, except to the extent expressly provided otherwise in the applicable documentation for the Service or in a writing signed by AT&T. Any copy must contain the same copyright notices and proprietary markings as the original Software.

6.3 The GOVERNMENT shall ensure that its employees and Users comply with the terms and conditions of this Article 6.

6.4 The term of the license granted hereunder shall be coterminous with any additional terms and conditions which covers the Software.

6.5 The GOVERNMENT agrees to comply with any additional restrictions that are provided with any Third-Party Software.

6.6 AT&T warrants that all AT&T Software will perform substantially in accordance with its applicable published specifications during a warranty period of ninety (90) days beginning on the date of delivery of the AT&T Software to the GOVERNMENT. If the GOVERNMENT returns to AT&T, within the 90-day warranty period, any AT&T Software that does not comply with this warranty, then AT&T, at its option, will either repair or replace the portion of the AT&T Software that does not comply or refund the amount paid by the GOVERNMENT for such failed or defective AT&T Software. This warranty will apply only if the AT&T Software is used in accordance with the terms of these terms and conditions and is not altered, modified or tampered with by the GOVERNMENT or Users.

7 Dispute Resolution

7.1 Except as described herein, all disputes, controversies or claims, whether based in contract, tort, statute, fraud, misrepresentation or any other legal theory, arising out of or relating to these terms and conditions and the Services provided hereunder shall be subject to FAR 52.233-1 (DISPUTES) (OCT 1995).

7.2 Disputes relating to: (i) matters that are subject to the primary jurisdiction of the FCC, a state public utility commission or other administrative agency; or (ii) non-compliance with Articles 4, 5 or 6 of these terms and conditions, a violation of which would cause irreparable harm for which damages would be inadequate; or (iii) billing or payment of charges under any Additional terms and conditions; or (iv) Software, technology or other intellectual property; shall likewise be subject to FAR 52.233-1 (DISPUTES) (OCT 1995).

8 Force Majeure

8.1 AT&T shall not have any liability for damages or delays due to fire, explosion, lightning, power surges or failures, strikes or labor disputes, water, acts of God, the elements, war, civil disturbances, acts of civil or military authorities or the public enemy, inability to secure products or transportation facilities, fuel or energy shortages, acts of omissions of communications carriers or suppliers, or other causes beyond its control whether or not similar to the foregoing.

9 Limitations of Liability

9.1 For purposes of Section 3.3, and Articles 8 and 9 and all other exclusive remedies and limitations of liability set forth in these terms and conditions or any Additional terms and conditions, "AT&T" shall be defined as AT&T, its Affiliates, and its and their employees, directors, officers, agents, representatives, subcontractors, interconnection service providers and suppliers; and "Damages" will refer collectively to all injury, damage, liability, loss, penalty, interest and expense incurred.

9.2 AT&T'S ENTIRE LIABILITY, AND THE GOVERNMENT'S EXCLUSIVE REMEDIES AGAINST AT&T, FOR ANY DAMAGES CAUSED BY ANY SERVICE DEFECT OR FAILURE, OR FOR OTHER CLAIMS ARISING IN CONNECTION WITH ANY SERVICE OR THESE TERMS AND CONDITIONS SHALL BE:

(i) FOR BODILY INJURY OR DEATH TO ANY PERSON NEGLIGENTLY CAUSED BY AT&T, THE GOVERNMENT'S RIGHT TO PROVEN DIRECT DAMAGES;

(ii) FOR DEFECTS OR FAILURES OF SOFTWARE, THE REMEDIES SET FORTH IN SECTION 6.6;

(iii) FOR DAMAGES OTHER THAN THOSE SET FORTH ABOVE AND NOT EXCLUDED UNDER THESE TERMS AND CONDITIONS OR ANY ADDITIONAL TERMS AND CONDITIONS, AT&T'S LIABILITY SHALL BE LIMITED TO PROVEN DIRECT DAMAGES NOT TO EXCEED PER CLAIM (OR IN THE AGGREGATE DURING ANY TWELVE-MONTH PERIOD) THE TOTAL NET PAYMENTS MADE BY THE GOVERNMENT FOR THE

APPLICABLE SERVICE UNDER THE APPLICABLE ADDITIONAL TERMS AND CONDITIONS DURING THE 12 MONTHS PRECEDING THE MONTH IN WHICH THE DAMAGE OCCURRED.

9.3 IN NO EVENT SHALL AT&T BE LIABLE FOR ANY INDIRECT, INCIDENTAL, CONSEQUENTIAL, PUNITIVE, RELIANCE OR SPECIAL DAMAGES, INCLUDING WITHOUT LIMITATION, DAMAGES FOR LOST PROFITS, ADVANTAGE, SAVINGS OR REVENUES OF ANY KIND OR INCREASED COST OF OPERATIONS, WHETHER OR NOT AT&T HAS BEEN ADVISED OF THE POSSIBILITY OF SUCH DAMAGES.

9.4 AT&T ALSO SHALL NOT BE LIABLE FOR ANY DAMAGES ARISING OUT OF OR RELATING TO: SERVICE INTERRUPTIONS; LOST OR ALTERED MESSAGES OR TRANSMISSIONS; INTEROPERABILITY, INTERACTION OR INTERCONNECTION PROBLEMS WITH APPLICATIONS, EQUIPMENT, SERVICES OR NETWORKS PROVIDED BY THE GOVERNMENT OR THIRD PARTIES; OR, UNAUTHORIZED ACCESS TO OR THEFT, ALTERATION, LOSS OR DESTRUCTION OF THE GOVERNMENT'S, USERS' OR THIRD PARTIES' APPLICATIONS, CONTENT, DATA, PROGRAMS, INFORMATION, NETWORK OR SYSTEMS.

9.5 EXCEPT AS EXPRESSLY PROVIDED IN THESE TERMS AND CONDITIONS, AT&T MAKES NO WARRANTIES, OTHER THAN THE WARRANTY OF MERCHANTABILITY, EXPRESS OR IMPLIED, AND SPECIFICALLY DISCLAIMS ANY WARRANTY OF FITNESS FOR A PARTICULAR PURPOSE, TITLE OR NON-INFRINGEMENT OR ANY WARRANTY ARISING BY USAGE OF TRADE, COURSE OF DEALING OR COURSE OF PERFORMANCE. AT&T DOES NOT WARRANT THAT THE SERVICES WILL BE UNINTERRUPTED OR ERROR-FREE, OR THAT THE SERVICES WILL MEET THE GOVERNMENT'S REQUIREMENTS OR THAT THE SERVICES WILL PREVENT UNAUTHORIZED ACCESS BY THIRD PARTIES. AT&T DOES NOT AUTHORIZE ANYONE TO MAKE A WARRANTY OF ANY KIND ON ITS BEHALF AND THE GOVERNMENT SHOULD NOT RELY ON ANYONE MAKING SUCH STATEMENTS.

9.6 THE LIMITATIONS OF LIABILITY SET FORTH IN THIS ARTICLE 9 AND IN ANY ADDITIONAL TERMS AND CONDITIONS SHALL APPLY: (i) REGARDLESS OF THE FORM OF ACTION, WHETHER IN CONTRACT, TORT, STRICT LIABILITY OR OTHERWISE; AND (ii) WHETHER OR NOT DAMAGES WERE FORESEEABLE. THESE LIMITATIONS OF LIABILITY SHALL SURVIVE FAILURE OF ANY EXCLUSIVE REMEDIES PROVIDED IN THESE TERMS AND CONDITIONS.

9.7 These terms and conditions do not expressly or implicitly provide any third party (including Users) with any remedy, claim, liability, reimbursement, cause of action or other right or privilege.

10 Termination

These terms and conditions will expire, and the Services provided will terminate five (5) years after award, unless extended thereafter. The GOVERNMENT will be responsible for payment of all charges under a terminated contract incurred as of the effective date of termination, except to the extent inconsistent with FAR 52.249-2 (TERMINATION FOR CONVENIENCE OF THE GOVERNMENT (FIXED PRICE))(SEP 1996). The provisions which by their nature would survive termination of these terms and conditions will survive any termination of these terms and conditions.

11 General Provisions

11.1 Any supplement, modification or waiver of any provision of these terms and conditions or any Additional terms and conditions must be in writing and signed by authorized representatives of both parties.

11.2 AT&T may, consistent with FAR 52.232-23 (ASSIGNMENT OF CLAIMS) (JAN 1986) without Customer's consent, assign its right to receive payments hereunder to an affiliate or subsidiary. AT&T may subcontract any or all of the work to be performed by it hereunder, but shall retain responsibility for the work that is subcontracted.

11.3 If any portion of these terms and conditions is found to be invalid or unenforceable, the remaining provisions shall remain in effect and the parties shall promptly begin negotiations to replace invalid or unenforceable portions that are essential parts of these terms and conditions.

11.4 Any initial demand for arbitration pursuant to Section 7.1 and any legal action arising in connection with these terms and conditions must begin within two years after the cause of action arises.

11.5 All notices under these terms and conditions shall be in writing and either mailed by certified or registered mail, postage prepaid return receipt requested, sent by express courier or hand delivered and addressed to each party at the address set forth on the front of these terms and conditions or, if the notice relates to a specific Additional terms and conditions, the address set forth in such Additional term and condition, or, in any case, such other address a party designates in writing.

11.6 The construction, interpretation and performance of these terms and conditions shall be governed and construed under the laws of federal government contracts.

11.7 The respective obligations of the GOVERNMENT and AT&T which by their nature would continue beyond the termination or expiration of these terms and conditions or any Additional terms and conditions shall survive termination or expiration of this Agreement or any Additional terms and conditions.

11.8 With respect to any indemnification obligations under these terms and conditions: (i) the indemnified party will notify the indemnifying party in writing promptly upon learning of any claim or suit for which indemnification may be sought; provided that failure to do so shall not affect the indemnity except to the extent the indemnifying party is prejudiced thereby; (ii) the indemnifying party shall have control of the defense or settlement, provided that the indemnified party shall have the right to participate in such defense or settlement with counsel of its own selection and at its sole expense; (iii) the indemnified party shall reasonably cooperate with the defense, at the indemnifying party's expense; and (iv) the indemnifying party shall not, without the indemnified party's express prior written consent, make any admission or stipulation, or consent to any settlement agreement or injunctive or non-monetary relief which could adversely affect any indemnified party.

11.9 THESE TERMS AND CONDITIONS, INCLUDING ANY TERMS AND CONDITIONS CONTAINED IN ANY ADDITIONAL TERMS AND CONDITIONS CONSTITUTE THE ENTIRE UNDERSTANDING BETWEEN THE PARTIES WITH RESPECT TO THE SERVICES TO BE PROVIDED HEREUNDER. THESE TERMS AND CONDITIONS SUPERSEDE ALL PRIOR AGREEMENTS, PROPOSALS, REPRESENTATIONS, STATEMENTS OR UNDERSTANDINGS, WHETHER WRITTEN OR ORAL, CONCERNING SUCH SERVICES OR THE RIGHTS AND OBLIGATIONS RELATING TO THOSE SERVICES. THESE TERMS AND CONDITIONS SHALL NOT BE CONTRADICTED, EXPLAINED OR SUPPLEMENTED BY ANY WRITTEN OR ORAL STATEMENTS, PROPOSALS, REPRESENTATIONS, ADVERTISEMENTS, SERVICE DESCRIPTIONS OR GOVERNMENT PURCHASE ORDER FORMS NOT EXPRESSLY SET FORTH IN THESE TERMS AND CONDITIONS OR ANY ADDITIONAL TERMS AND CONDITIONS.

AT&T Managed Internet Service

Additional Terms and Conditions for Government

AT&T Additional Terms and Conditions – Managed Internet Service

1. DEFINITIONS

A. Capitalized terms used but not defined in this Attachment are defined elsewhere in the Agreement.

B. "Service" means each Service You order under this Attachment, as more fully described in the Service Guide.

C. The "Service Guide" consists of the standard AT&T service descriptions and other information relating to each of the Services offered under this Attachment, as amended from time to time, and is located at http://www.att.com/abs/serviceguide or such other designated location (the "Service Guide").

D. Except as specified below, the "Service Activation Date" for a Service means the date Your Service is activated, as more fully described in the Service Guide.

E. ""Scheduled Service Activation Date" for each Service is the date scheduled by AT&T for Your Service to be activated, as may be specified in the Sales Order for Your Service.

F. "Initial Service Period" for each Service is the Service Period stated on such Services' Pricing Schedule that is attached to this Agreement. The Initial Service Period begins on the Service Activation Date of such Service and restarts upon upgrades to such Service.

G. "Service Period" for each Service is the Initial Service Period for such Service and all applicable Renewal Service Periods (as described in Section
2B).

H. "Sales Order" for each Service details specific provisioning related information for Your order and is completed after the signature of the Agreement, in consultation with You. It is usually completed during any AT&T technical interviews for the Service.

2. PRICING, RENEWALS, ORDERS AND BILLING

A. The pricing for each Service during the Initial Service Period, including any discounts or discount plans, are shown on each Service's Pricing Schedule and are fixed for the Initial Service Period; provided that IP mail service shall be provided at the prices specified in Your Pricing Schedule or Service Guide, which prices may be revised at any time upon 30 days' notice and which notice may be provided in writing, by email or website posting. After the Service Period, the pricing will revert to the then-current full list price and no discounts or discount plans shall apply.

B. All Sales Orders shall be for an Initial Service Period of at least one year, unless otherwise agreed between us in the order. After the Initial Service Period for any Service, such Service shall continue under the terms of the Agreement, for additional consecutive 1-year Renewal Service Periods unless

either party provides the other written notice that it does not desire to renew such Service. If You do not wish to renew, You must notify AT&T in writing within 30 days after the last day of the applicable Initial or Renewal Service Period and such notice will not be effective until 30 days after AT&T receives such notice.

C. The options and features of each Service which apply to You are contained in a Sales Order or any similar document used for provisioning Your Service. You must order a Service within 90 days of the Effective Date of this Attachment, otherwise AT&T may terminate this Attachment immediately upon written notice. Additional orders of Service by You shall not be deemed a supplement or modification of this Agreement and shall be subject to the terms of this Agreement. Terms and conditions on any non- AT&T order form shall not apply.

D. Unless otherwise specified on Your Pricing Schedule, billing for any Service You order will begin on the Service Activation Date of the Service. However, if by Your actions or omissions the Service Activation Date for Your Service does not occur by the Scheduled Service Activation Date, billing will begin on the day after

the Scheduled Service Activation Date for such Service.

3. TERMINATION AND INITIAL SATISFACTION

GUARANTEE

A. If for any reason You are not satisfied with the performance of the Service within 30 days after the Service Activation Date, then, during such 30-day period, You may terminate the Service by giving AT&T at least 7 days' prior written notice of termination and without payment of Termination Charges (as defined in Section 3J or in the Pricing Schedule for Your Service)..

B. If for any reason other than Your act or omission or a force majeure event (as described in the Force Majeure provision of the Master Agreement) AT&T does not install any Service within 30 days after such Service's Scheduled Service Activation Date, You shall have a one-time right to terminate such Service by notifying AT&T in writing before the Service Activation Date for the Service in question.

C. You may terminate any Service, without payment of Termination Charges, at any time during the Service Period if You replace such Service with a new Internet-related service from AT&T having a Service Period and revenue commitment equal to or greater than the remaining Service Period and revenue commitments of the Service You are terminating.

D. You may terminate any Service during the Initial Service Period or any subsequent Renewal Service Period by giving AT&T at least 60 days' prior written notice and payment of any applicable Termination

Charges set forth in this Attachment or the Pricing Schedule for such Service.

E. AT&T may terminate this Attachment or any Service upon written notice to You if You do not comply with the AUP (as defined in Section 4B).

F. AT&T may terminate the MIS Service, in whole or in part, upon ninety (90) days written notice to You if AT&T decides to discontinue such Service, in whole or in part.

G. Upon termination of any Service by You under this Section 3, or AT&T under Section 3E, You will be responsible for payment of any charges incurred as of the termination date, as well as access facilities termination charges or other charges incurred by AT&T as a result of such termination.

H. In addition, You will be responsible for the Termination Charges set forth in this Attachment or the applicable Pricing Schedule of each Service You order if You terminate a Service under Section 3D of this Attachment or if AT&T terminates or suspends such Service or this Attachment or the Agreement under the Responsibilities of Parties or the Termination Sections of the Master Agreement or under Section 3E or 4F of this Attachment. I. The Termination Charge during the Initial Service Period, or any subsequent Renewal Service Period will consist of: (1) 100% of the scheduled payments for the MIS Service for each of the months remaining through month 12 of the relevant Service Period; (2) 50% of the scheduled payments for the MIS Service , if any, remaining through month 24 of the relevant Service Period; (3) 25% of the scheduled payments for the MIS Service, if any, remaining through month 36 of the relevant Service Period; (4) all discounts, if any, received by you; and (5) any access facilities cancellation charges or other charges incurred by AT&T as a result of such cancellation.

4. RESPONSIBILITIES OF THE PARTIES

A. AT&T shall provide Service to You in accordance with the Service Guide, as the same may be revised from time to time.

B. You acknowledge that You have read, agree to be bound by and shall assure that Users will comply with AT&T's Acceptable Use Policy for the Service (the "AUP"). The AUP may be revised from time to time, and is available for review at: www.ipservices.att.com/policy.html, or at such other address as AT&T may specify by posting or email notice.

C. Any of the AT&T Security Services which You may order, such as Managed Firewall Services, are intended for use in conjunction with a single AT&T-approved Internet connection to Your network. AT&T does not monitor other additional Internet connections which may be maintained by You unless AT&T Security Services are ordered for the connections in question. You acknowledge and understand that multiple Internet connections, unless protected by an Internet security product or service, may significantly decrease Your overall network security level. To the extent You deem necessary, You will implement security procedures and controls necessary to limit access to the Service and You will maintain facilities and procedures external to the Service for reconstruction of lost or altered files, data or programs. AT&T SECURITY SERVICES SUCH AS MANAGED FIREWALL SERVICE (MFWS) AND MANAGED INTRUSION DETECTION SERVICE (MIDS) DO NOT GUARANTEE NETWORK SECURITY OR PREVENT SECURITY INCIDENTS. AT&T ACCEPTS NO RESPONSIBILITY, NOR ANY LIABILITY FOR THE SECURITY OF YOUR ELECTRONIC ENVIRONMENT, WHETHER OR NOT AT&T HAS INSTALLED ANY INTERNET SECURITY EQUIPMENT OR SERVICE.

D. Except for IP addresses expressly registered in Your name, all IP addresses, AT&T-based domain names and telephone numbers shall remain, at all times, property of AT&T and shall be nontransferable and You shall have no right to use such IP addresses upon termination or expiration of this Service Order Attachment.

E. You shall arrange for and timely provide the necessary access to any rights of way, equipment space, conduit, electrical power and environmental conditions which AT&T deems necessary to provide, maintain or remove the facilities required for any of the Services on all applicable premises without charge or cost to AT&T. AT&T will also have the right to obtain access to any of its wiring installed in any conduit provided by You at any splice or junction box. You also agree to provide AT&T with a safe place to work and to protect all AT&T facilities against fire, theft, vandalism or other casualty. You shall be responsible for compliance with all governmental and third party requirements relating to such equipment space and conduit.

F. You agree to comply, and to use best efforts to cause all Users to comply, with United States law regarding the transmission of technical data and Software which is exported from the United States.

H. AT&T will not provide support directly to nor interface with any User. You are responsible for (i) selecting the Users that You permit to access each Service; (ii) implementing with Your Users appropriate terms, conditions, and measures to ensure that all Users comply with the terms and conditions of the Agreement; (iii) establishing Your Users' rights to access each Service; (iv) providing training, copying, installing and distributing any Software (and updates, if any) to Your Users; and (v) in the case of any Service You are permitted to resell under this Attachment, billing and collecting any amounts You elect to charge Your Users in connection with such service.

5. EQUIPMENT AND SOFTWARE

A. Equipment (including all fiber optic or other facilities) and Software provided to You by AT&T for use in conjunction with the Service (collectively, "Equipment"), if any, will be subject to the terms, conditions and licenses set forth in this Attachment or in the Service Guide.

B. You, at Your own expense, will provide in a timely manner: (i) an equipment room environmentally compliant with local laws and other environmental conditions as specified by AT&T; (ii) reasonable access to the Equipment at times specified by AT&T; (iii) adequate work space, heating/cooling, light, ventilation, and electrical outlets and (iv) for any Service which requires a telephone line, as detailed in the Service Guide, you shall also make available to AT&T for diagnostic purposes a local exchange carrier dedicated inbound telephone (POTS) line, which shall not be used by you for any other purpose while Service is being provided. You shall also arrange for and timely provide the necessary access to any rights of way, which AT&T deems necessary to provide, maintain or remove the facilities required for any of the Services on all applicable premises without charge or cost to AT&T. Equipment shall not be removed, relocated, modified, interfered with, or attached to non-AT&T equipment by You without prior written authorization from AT&T.

C. Except for Purchased Equipment, all rights, title and interest to Equipment will remain with AT&T or its suppliers, as the case may be. You will, however, be liable for risk of loss to such Equipment on Your premises and repair charges or the replacement cost of such Equipment if it is damaged or lost, unless caused by AT&T or its agents or suppliers.

D. Title to, and risk of loss of, Equipment, including associated software, purchased by You under this Agreement (collectively, "Purchased Equipment"), will pass to You as of the delivery date, upon which date, AT&T will have no further obligations of any kind (including without limitation operation and maintenance) with respect to that Purchased Equipment. AT&T hereby assigns software licenses for Purchased Equipment to You, and You agree to be bound by the terms of those licenses. AT&T retains a purchase money security interest in each item of Purchased Equipment until You pay for it in full; You appoint AT&T as Your agent to sign and file a financing statement to perfect AT&T's security interest.

E. On termination of the applicable Service, You will return all Equipment (other than fully-paid for Purchased Equipment) in the same condition as originally installed, ordinary wear and tear excepted, or You will pay for restoration of the Equipment to such condition. AT&T will not be obligated to restore the premises to its original condition. If You do not return the Equipment to an AT&T specified address, then You shall be liable for its purchase price (if

Purchased Equipment) or then-current market value (if other than Purchased Equipment). F. ALL EQUIPMENT AND THIRD PARTY SOFTWARE PROVIDED HEREUNDER IS PROVIDED ON AN "AS IS" BASIS AND YOU ASSUME THE RISK ASSOCIATED WITH USE, REPAIR AND MAINTENANCE OF SUCH EQUIPMENT AND SOFTWARE.

6. DOMAIN NAME SYSTEM SERVICES

A. You may, from time to time, request that AT&T submit to a Domain Name Registry, on your behalf, domain name registration applications (each, an "Application"), for domain names you select (each, a "Domain Name"). If AT&T elects, in its sole discretion, to perform such service, the Applications shall name AT&T as the Internet Service Provider which will host such domain name. AT&T is not a domain name registry. AT&T's charges for Domain Name Management Services (the "DNS Services") do not include the domain name registry's fees. You shall be responsible for, and shall promptly pay, all DNS Services and domain name registry's fees. You represent and warrant that (i) all statements on the Application are true and correct; (ii) none of the requested Domain Names or your use of any Domain Name will interfere with the rights of any third party, infringe upon any trademark, service mark or other personal, moral or property right; and (iii) you have a legitimate business purpose for registering each Domain Name, which purpose relates to your purchase of the Service.

B. THE DNS SERVICES ARE PROVIDED ON AN "AS IS" BASIS. IN NO EVENT SHALL AT&T BE LIABLE FOR PROVIDING, FAILING TO PROVIDE, OR THE PERFORMANCE OR THE FAILURE TO PERFORM OF THE DNS SERVICES. WITHOUT LIMITING THE FOREGOING, AT&T DOES NOT MAKE ANY WARRANTIES REGARDING THE SUCCESSFUL REGISTRATION OF ANY DOMAIN NAME, THE TIME OF SUBMISSION OF THE APPLICATION OR YOUR RIGHT TO CONTINUED USE OF A DOMAIN NAME AFTER REGISTRATION. AT&T IS NOT REQUIRED TO PARTICIPATE IN ANY DISPUTES RELATING TO THE APPLICATION OR THE REGISTRATION OF ANY DOMAIN NAME

C. With respect to any Domain Name, AT&T may elect to terminate or suspend its hosting of or provision of any DNS Services with respect to any or all of your Domain Names immediately upon written notice if (i) an Application is rejected; (ii) the Domain Name Registration is revoked or placed on "hold" or assigned to a third party; or (iii) AT&T receives or becomes aware of any complaints, conflicting claims, disputes or court orders regarding the Domain Name.

AT&T Dedicated Hosting Services - Managed Services

Additional Terms and Conditions for Government

Additional Terms and Conditions for Government

Hosting Services

These Additional Terms and Conditions, together with the AT&T Internet Services General Terms and Conditions, set forth the terms and conditions ("Agreement") pursuant to which AT&T will provide AT&T Dedicated Hosting Services which the Government customer ("You" and "Your") now orders or subsequently orders during the term of AT&T's IT Schedule contract with the General Services Administration.

1 Definitions

A. "Customer Equipment" refers to any of Your Equipment which AT&T allows You to place in Your Space.

B. "Contract Term" refers to the period which begins on the Effective Date and continues until the end of the Service Period.

C. "Data Center" refers to specific AT&T facility where Your Space, Equipment or Service is located or provided.

D. "Equipment" collectively refers to any items (including all fiber optic or other facilities) and Software provided by AT&T for use in conjunction with Your Service.

E. The "Implementation Date" is the date when Your equipment is physically installed and supplied with Internet bandwidth, regardless of whether Your Content or any software You are using has been deployed.

F. The "Initial Service Period" for each Service is the Service Period stated on the first page of this Attachment. The Initial Service Period begins on the Service Activation Date of such Service.

G. The "Installation Date Letter" refers to the initial letter which AT&T shall send You via email or other method which details the projected Implementation Date or Site Readiness Date for Your Service.

H. "Lease" refers to the lease agreement between AT&T, and any of its Affiliates, and the landlord or landlords where AT&T maintains a Data Center.

I. "Purchased Equipment" refers to all Equipment, including associated software, purchased by You from AT&T, or its Affiliates, under this Agreement.

J. "Service" means the Dedicated Hosting services You order under this Attachment, as more fully described in the Service Guide.

K. "Service Activation Date" for each Service is either the Implementation Date or the Site Readiness Date, whichever date occurs first.

L. The "Service Guide" consists of the standard AT&T service descriptions and other information relating to each of the Services offered under this Attachment, as amended from time to time, and is located at *url:* http://www.att.com/abs/serviceguide or such other designated location.

M. The "Service Period" begins on the Initial Service Period for the Service and continues through all applicable Renewal Service Periods (as described in Section 2C), or until the Service is terminated, whichever occurs later.

N. "Site" refers to each Data Center where Your Service is located.

O. The "Site Readiness Date" for AT&T Dedicated Hosting Customer Managed Collocation Service Customers is the date when Your Space is ready for equipment deployment. AT&T shall notify You of this date in advance via email or other method.

P. "Space" refers to the collocation space within any of the Data Centers which AT&T designates for Your use and is described in the Pricing Schedule.

Q. The "Statement of Work" contains the specific configuration and other relevant details of Your Service.

2 Pricing, Renewals, Orders and Billing

A. The pricing for the Service during the Service Period, including any discounts or discount plans, is shown on the attached Pricing Schedule and is fixed for the Service Period. After the Service Period, the pricing will revert to the then-current full list price and no discounts or discount plans shall apply.

B. The Initial Contract Term begins on the Effective Date and, if applicable, ends on the anniversary of the Service Activation Date, unless terminated earlier in accordance with the provisions hereof.

C. Except in the instance stated below for the Customer Managed Collocation Service, after the Initial Service Period for any Service, such Service shall continue under the terms of the Agreement, for additional consecutive 1-year Renewal Service Periods unless either party provides the other written notice that it does not desire to renew such Service. If You do not wish to renew, You must notify AT&T in writing within 30 days after the last day of the applicable Initial or Renewal Service Period and such notice will not be effective until 30 days after AT&T receives such notice. In the case of the Customer Managed Collocation Service, this Attachment shall expire no later than the date on which the Lease expires or is terminated unless the same has been replaced with another Lease, and provided further that it is understood that AT&T shall have no obligation to renew, extend, keep in effect or replace the Lease.

D. The options and features of each Service which apply to You are contained in a Statement of Work or other similar documents, which are completed by AT&T in consultation with You. Additional orders of Service by You shall not be deemed a supplement or modification of this Agreement and shall be subject to the terms of this Agreement. Terms and conditions on any non-AT&T order form shall not apply.

E. Unless You have selected the Reservation Option, any of the charges for each Site of Your Service accrue on the Service Activation Date for the Site.

F. Under the Reservation Option, You will be billed according to the rates specified in the Pricing Schedule, until the Service Activation Date of Your Service.

3 Termination

A. You will be responsible for payment of all charges under a terminated contract incurred as of the effective date of termination, as set forth herein, except to the extent inconsistent with FAR 52.249-2 (TERMINATION FOR CONVENIENCE OF THE GOVERNMENT (FIXED PRICE) (SEP 1996). The provisions which by their nature would survive termination of the terms and conditions will survive any termination of these terms and conditions.

B. If for any reason other than Your act or omission or a force majeure event (as described in the Force Majeure provision of the General Terms and Conditions - AT&T Internet Services), or You have selected the Reservation Option, AT&T does not install any Service within 30 days after such Service's scheduled Site Activation Date, You shall have a one time right to terminate such Service by notifying AT&T in writing before the Service Activation Date for the Service in question.

C. Unless otherwise noted in this Agreement, You must implement your Service within 90 days of the Effective Date of order placement, otherwise AT&T may terminate Your order immediately upon written notice.

D. You may terminate any Service at any time during the Service Period if You replace such Service with a new Dedicated Hosting Service from AT&T having a Service Period and revenue commitment equal to or greater than the remaining Service Period and revenue commitments of the Service You are terminating.

E. You may terminate any Service during the Initial Service Period or any subsequent Renewal Service Period by giving AT&T at least 60 days' prior written notice and payment of any applicable Termination Charges (as defined in Section 3.J).

F. AT&T may terminate any Service upon written notice to You if You do not comply with the AUP (as defined in Section 4B).

G. AT&T may also terminate a Service, in whole or in part, upon ninety (90) days written notice to You if AT&T decides to discontinue such Service, in whole or in part.

H. Upon termination of any Service by You under this Section 3, or AT&T under Section 3.F., You will be responsible for payment of any charges incurred as of the termination date, as well as access facilities or backend connectivity cancellation charges or other charges incurred by AT&T as a result of such termination.

I. In addition, You will be responsible for Termination Charges of each Service You order if You terminate a Service under Section 3E of this Attachment or if AT&T terminates or suspends such Service under Section 3.2 or 10 of the General Terms and Conditions - AT&T Internet Services or under Section 3F or 4F of these Additional Terms and Conditions.

J. In the event of a termination during the Contract Term, You are responsible for payment of Termination Charges and are not eligible for a refund of any fees. The Termination Charge will consist of: (1) 100% of the scheduled payments for the Dedicated Hosting Service for each of the months remaining through month 12 of the relevant Service Period; (2) 50% of

the scheduled payments for the Service, if any, remaining through month 24 of the relevant Service Period; (3) 25% of the scheduled payments for the Service, if any, remaining through month 36 of the relevant Service Period; (4) all discounts, if any, received by You; and (5) any access facilities cancellation charges or other charges incurred by AT&T as a result of such termination.

4 Responsibilities of the Parties

A. AT&T shall provide Service to You in accordance with the Service Guide, as the same may be revised from time to time.

B. You acknowledge that You have read, agree to be bound by and shall assure that Users will comply with AT&T's Acceptable Use Policy for the Service (the "AUP"). The AUP may be revised from time to time, and is available for review at: www.ipservices.att.com/policy.html, or at such other address as AT&T may specify by posting or email notice.

C. Any of the AT&T Security Services which You may order, such as any type of Managed Firewall Services, are intended for use in conjunction with a single AT&T-approved Internet connection to Your network. AT&T does not monitor other additional Internet connections which may be maintained by You unless AT&T Security Services are ordered for the connections in question. You acknowledge and understand that multiple Internet connections, unless protected by an Internet security product or service, may significantly decrease Your overall network security level. To the extent You deem necessary, You will implement security procedures and controls necessary to limit access to the Service and Your Space and You will maintain facilities and procedures external to the Service for reconstruction of lost or altered files, data or programs.

D. ALL AT&T SECURITY SERVICES, SUCH AS MANAGED FIREWALL SERVICE, DO NOT GUARANTEE NETWORK SECURITY OR PREVENT SECURITY INCIDENTS. AT&T ACCEPTS NO RESPONSIBILITY, NOR ANY LIABILITY FOR THE SECURITY OF YOUR ELECTRONIC ENVIRONMENT, WHETHER OR NOT AT&T HAS INSTALLED ANY SECURITY EQUIPMENT OR SERVICE.

E. You agree to cooperate with AT&T in a prompt and timely manner in any way which is necessary for the provisioning of Your Service. Furthermore, for any AT&T Security Service, such as Managed Firewall, You agree to complete and return to AT&T in an expeditious manner any and all forms which relate to the security policies You wish to establish for Your website.

F. You agree to allow AT&T to perform routine and unscheduled security maintenance and/or security audits on all AT&T Managed Customer platforms within the Data Facility. AT&T will promptly notify You in the event of any disruption of the Service resulting from these security activities.

G. AT&T makes no claims or warranties regarding any managed storage, data backup, media streaming, load balancing or any other option or feature of the Service offered under this Agreement, nor does it in any way make any claims regarding the integrity of any data which is backed up, stored or subject to load balancing under the Service. Such data is

specifically not warranted to be free from data corruption or other right/read errors, equipment failures or any other occurrences which may impact the integrity of the data. Further, AT&T makes no claims or warranties regarding the proper restoration of any such data, nor the usability or structure of any such restored data.

H. You are solely responsible for creating, updating and maintaining any of Your Content. AT&T will not provide support for use of content authoring tools or other support in connection with the Content of Your Web Site.

I. Except for IP addresses expressly registered in Your name, all IP addresses, AT&T-based domain names and telephone numbers shall remain, at all times, property of AT&T and shall be nontransferable and You shall have no right to use such IP addresses upon termination or expiration of Your order and You shall release any such IP addresses to AT&T immediately upon such termination or expiration.

J. You agree to comply, and to use commercially reasonable efforts to cause all Users to comply, with United States law regarding the transmission of technical data and Software which is exported from the United States.

K. AT&T will not provide support directly to nor interface with any User. You are responsible for (i) selecting the Users that You permit to access each Service; (ii) implementing with Your Users appropriate terms, conditions, and measures to ensure that all Users comply with the terms and conditions of the Agreement; (iii) establishing Your Users' rights to access each Service; (iv) providing training, copying, installing and distributing any Software (and updates, if any) to Your Users; and (v) billing and collecting any amounts You elect to charge Your Users in connection with such Service.

5 Customer Managed Collocation Service

A. The Services covered by this Attachment may involve the provision to You of Customer Managed Collocation Services which include an AT&T- or Customer-owned server or other equipment that is to be collocated on AT&T's premises and which may include use of third party software, hardware or other third party services. Your Space, which is in the premises that may be leased by AT&T, is described in the Pricing Schedule .

B. If You have elected to do so, AT&T agrees to allow You to place Customer Equipment, as defined in the Pricing Schedule or the Statement of Work, in Your Space, subject and subordinate to the terms and provisions of any applicable Lease. Customer Equipment shall be approved in a Statement of Work by AT&T prior to installation in the Space.

C. You hereby accept the Space in its "AS IS" condition and acknowledge that AT&T has no obligation to make alterations, improvements, additions, decorations or changes within Your, Space or any part thereof, except to the extent required to conform to the standard physical space and electrical power configurations in effect for the Data Center.

D. In connection with the provision of the Space, AT&T shall provide to You the installation services, Remote Hands Services and any other space services set forth in the Pricing Schedule . In the event of any taking by eminent domain or damage by fire or other casualty to Your Space, You shall acquiesce and be bound by any action taken by or agreement entered into between AT&T or its Affiliates and the landlord or landlords with

respect thereto.

E. As part of the Customer Managed Collocation Service, You are granted access into AT&T's Data Center. AT&T, at its sole discretion, may grant You use of an access card or any other entry device. In the event such a card is lost or stolen, You must report this to AT&T as soon as the access card is lost or as soon you discover that the card has been lost. A lost or stolen access card is replaceable upon payment of a replacement fee to AT&T.

F. Upon termination of this Attachment, You shall leave the Space in as good condition (except for normal wear and tear) as it was at the commencement of this Attachment, and You shall remove any Customer Equipment and other property from the Space.

6 Facilities, Equipment And Software

A. All right, title and interest in all facilities and associated equipment provided by either party shall at all times remain exclusively with such party. Neither party shall create any liens or encumbrances with respect to such facilities or equipment of the other party. You are responsible for providing any insurance you may desire to maintain on behalf of Customer Equipment.

B. Equipment if any, will be subject to the terms, conditions and licenses set forth in this Agreement or in the Service Guide. Equipment shall not be removed, relocated, modified, interfered with, or attached to non-AT&T equipment by You without prior written authorization from AT&T.

C. Except for Purchased Equipment, all rights, title and interest to Equipment will remain with AT&T or its suppliers, as the case may be. Title to, and risk of loss of, Purchased Equipment, will pass to You as of the delivery date, upon which date, AT&T will have no further obligations of any kind (including without limitation operation and maintenance) with respect to that Purchased Equipment, unless otherwise agreed to in writing by both parties. AT&T hereby transfers permission to use the software licenses for Purchased Equipment to You, and You agree to be bound by the terms of those licenses. AT&T retains a purchase money security interest in each item of Purchased Equipment until You pay for it in full; You appoint AT&T as Your agent to sign and file a financing statement to perfect AT&T's security interest.

D. Upon sixty (60) days' prior written notice and solely for the purposes of AT&T's convenience, AT&T may require Customer (at AT&T's expense) to relocate Customer Equipment within the Data Center; provided, however, that the site of relocation shall afford comparable environmental conditions for the Equipment and comparable accessibility to Customer Equipment. Otherwise, upon sixty (60) days' prior written notice or, in the event of an emergency, with as much notice as may be feasible, AT&T may require You, at Your expense, to relocate Customer Equipment within the, or in any other, Data Center, provided, however, that the site of relocation shall afford comparable environmental conditions for any such Customer Equipment and comparable accessibility to Customer Equipment.

E. AT&T shall use reasonable efforts to maintain the Customer Managed Collocation Services in accordance with applicable performance standards therefore and to obtain and keep in

effect all rights of way required to provide the Customer Managed Collocation Services. AT&T shall have no responsibility for the hardware maintenance and repair of, or any liability of any kind with respect to, facilities and equipment which it does not furnish, and may assess You its standard charge for any false call outs.

F. ALL EQUIPMENT AND THIRD PARTY SOFTWARE PROVIDED HEREUNDER IS PROVIDED ON AN "AS IS" BASIS AND YOU ASSUME THE RISK ASSOCIATED WITH USE, REPAIR AND MAINTENANCE OF SUCH EQUIPMENT AND SOFTWARE.

7 Indemnification

Without limitation of any other provision of the Agreement, You hereby agree to indemnify and hold harmless AT&T against any and all liabilities, costs, expenses and claims relating to (i) Your unlawful or improper use of: the Customer Managed Collocation Services, Your Space, the Data Center or the AT&T network, (ii) Your failure to comply with the terms and provisions of the Agreement, including without limitation this Attachment, or (iii) property damage or personal injury claims caused by Your acts or omissions or arising from Your operation of Customer or other Equipment or Your use of the Space or the Data Center.

8 Domain Name System Services

A. You may, from time to time, request that AT&T submit to a Domain Name Registry, on your behalf, domain name registration applications (each, an "Application"), for domain names you select (each, a "Domain Name"). If AT&T elects, in its sole discretion, to perform such service, the Applications shall name AT&T as the Internet Service Provider which will host such domain name. AT&T is not a domain name registry. AT&T's charges for Domain Name Management Services (the "DNS Services") do not include the domain name registry's fees. You shall be responsible for, and shall promptly pay, all DNS Services and domain name registry's fees. You represent and warrant that (i) all statements on the Application are true and correct; (ii) none of the requested Domain Names or your use of any Domain Name will interfere with the rights of any third party, infringe upon any trademark, service mark or other personal, moral or property right; and (iii) you have a legitimate business purpose for registering each Domain Name, which purpose relates to your purchase of the Service.

B. THE DNS SERVICES ARE PROVIDED ON AN "AS IS" BASIS. IN NO EVENT SHALL AT&T BE LIABLE FOR PROVIDING, FAILING TO PROVIDE, OR THE PERFORMANCE OR THE FAILURE TO PERFORM OF THE DNS SERVICES. WITHOUT LIMITING THE FOREGOING, AT&T DOES NOT MAKE ANY WARRANTIES REGARDING THE SUCCESSFUL REGISTRATION OF ANY DOMAIN NAME, THE TIME OF SUBMISSION OF THE APPLICATION OR YOUR RIGHT TO CONTINUED USE OF A DOMAIN NAME AFTER REGISTRATION. AT&T IS NOT REQUIRED TO PARTICIPATE IN ANY DISPUTES RELATING TO THE APPLICATION OR THE REGISTRATION OF ANY DOMAIN NAME

C. With respect to any Domain Name, AT&T may elect to terminate or suspend its hosting of or provision of any DNS Services with respect to any or all of your Domain Names

immediately upon written notice if (i) an Application is rejected; (ii) the Domain Name Registration is revoked or placed on "hold" or assigned to a third party; or (iii) AT&T receives or becomes aware of any complaints, conflicting claims, disputes or court orders regarding the Domain Name.

9 Disclosure of Service

You hereby allow AT&T to publicly acknowledge, You, as a Customer of the AT&T Dedicated Hosting Service with potential Customers of the Service. AT&T will limit its use of any information about You or Your Service, and will not in any other way make public mention of You or Your Service without your prior written authorization.

10 Remote Hands Service

A. You have, pursuant to this Agreement, located certain equipment in any number of AT&T Data Centers, and may from time to time may request that AT&T perform certain basic services with respect to such equipment. Such services (herein referred to as "Remote Hands Services") offer an opportunity for You to avoid dispatching field services personnel for certain basic on-site activity. These Services are more fully described within the Service Guide.

B. You acknowledge that AT&T will provide Remote Hands Services under Your specific direction. AT&T DOES NOT OFFER OR PROVIDE (AND HEREBY DISCLAIMS) ANY WARRANTY WITH RESPECT TO REMOTE HANDS SERVICES. NOTWITHSTANDING ANYTHING CONTAINED IN THE AGREEMENT TO THE CONTRARY, THE REMOTE HANDS SERVICES ARE PROVIDED ON AN "AS IS" BASIS. AT&T SHALL NOT BE LIABLE IN ANY WAY WHATSOEVER FOR ANY DIRECT OR INDIRECT LOSS, COST OR DAMAGE YOU MAY INCUR IN CONNECTION WITH AT&T PROVIDING OR FAILING TO PROVIDE THE REMOTE HANDS SERVICES TO CUSTOMER.

C. You will at all times defend, indemnify and hold harmless AT&T from and against any and all damages, liabilities, losses, penalties, interest and other expenses (including, without limitation, reasonable attorney's fees), whether or not arising out of or relating to any third party claims, and regardless of the form of action, whether in contract, tort, strict liability or otherwise, concerning AT&T's provision of the Remote Hands Services to You.

11 General

A. Every effort has been made to ensure that the information in this Agreement is complete and accurate; however, AT&T is not responsible for typographic errors or omissions.

AT&T Business Internet Service

Additional Terms and Conditions for Government

Additional Terms and Conditions for Government

Internet Service

These Additional Terms and Conditions, together with the AT&T Internet Services General Terms and Conditions, set forth the terms and conditions ("Agreement") pursuant to which AT&T will provide AT&T Business Internet Service which the Government customer ("Customer" and "Customer's") now orders or subsequently orders during the term of AT&T's IT Schedule contract with the General Services Administration.

1 The Services

The particulars of the Service applicable to Customer shall be as set forth in: (1) the Sales Order(s) (the "Sales Order") completed by AT&T in consultation with Customer as applicable, as well as, any Sales Orders that may be completed by AT&T and the Customer thereafter; (2) the appropriate section of the Service Guide and (3) any other applicable Supplement for Custom Solution. Capitalized terms used but not defined in this section are defined elsewhere in the Agreement.

A. Applicable sections of the Service Guide and/or Supplements for Custom Solution may contain terms in addition to those AT&T specifies in this Agreement. Sections of the Service Guide, which explain in detail AT&T Global Network Services' generally available Services, do not require signature. Both parties must sign Supplements for Custom Solution.

B. The Service becomes subject to the terms of this Agreement when AT&T accepts Customer's order and the Customer (1) signs the Agreement or appropriate Supplement for Custom Solution; the Customer (2) uses the Service or related Software, or allowing others to do so or the Customer (3) makes any payment for the Service or related Software.

C. The AT&T Global Network Services network is generally available twenty-four hours per day, seven days per year. AT&T reserves the right to schedule reasonable hours for maintenance or system changes at AT&T's sole discretion or to perform emergency maintenance as may be required.

D. The "Service Period" for a Service is the date when a Service, in whole or in part, is first made available to Customer, or the date of the first use of any Service by Customer, Users or End Users.

E. An "End User" is defined as a User or other party accessing a Service or any data, equipment or related Software within a Service or any User or any other party who makes use of User Identifications obtained from Customer or obtained via any other authorization or means under Customer's control. User Identifications are generally required to access a Service that AT&T provides. User Identifications include account, user ID, password, application name and other identifiers.

2 Support Services

A. When AT&T accepts Customer's order for the Services, AT&T provides support Services such as those specified in this item and in items B and C below. AT&T will provide User Identifications to Customer, which enable access to Services. "User Identifications" are a code or codes, such as a user ID or a password, which enable authorization or access to Software, programs, data, or equipment as part of a Service. Customer may authorize as "User" a duly authorized representative of CUSTOMER who has access to and makes use of service, or uses Service by providing a User Identification to the End User.

B. AT&T will provide an activity account and invoice account to Customer. An activity account is an alphanumeric identification used to identify Customer for the placement of Customer's orders and for the use of the Services. Customer may request more than one activity account. An invoice account is an alphanumeric identification used to control Customer's invoicing. Generally there is one invoice account for each activity account. AT&T charges Customer a monthly charge called a "base charge" for each invoice account Customer requests.

C. For certain Services, Customer may be eligible to receive a Service allowance. The Service allowance, if any, is specified in the applicable Service Guide. The Service allowance is a credit applied to the current month's invoice based upon the total dollar amount of Service specific charges incurred in the previous month.

D. A volume discount may be available under separate Supplements for Custom Solution to Customers who make a volume commitment. A volume discount is a fixed discount applied to eligible charges based upon Customer's Volume Discount Commitment.

3 Pricing and Billing

A. Amounts are due upon receipt of invoice and payable as AT&T specifies. Charges for Services are billed as AT&T specifies in the applicable sections of the Service Guide, or Supplements for Custom Solution, which may be in advance, periodically during the provision or performance of the Service, or after the Service is completed.

B. One-time, recurring and usage charges may be based on measurements of actual or authorized use

C. AT&T may change the invoicing procedures upon three months' prior written notice to Customer.

D. Additional charges may apply (such as custom solutions set forth in Supplements for Custom Solution, special handling or travel related expenses). Additional charges will be agreed to in advance in the applicable Service Guide or Supplements for Custom Solution.

E. Customer will pay all surcharges and fees imposed by any government (e.g. Universal Services Fund payments, pay phone services, Prescribed Interexchange Carrier Charges), including those that are passed through to AT&T by its suppliers, for Services AT&T provides to Customer.

4 Changes and Termination

A. Customer agrees to give AT&T one month's written notice to terminate Customer's use of a Service. Customer's termination will be effective at month's end following receipt of written notice of termination.

B. AT&T may terminate this Attachment or any Service upon written notice to Customer if Customer does not comply with the AUP (as defined in Section 5.F).

C. AT&T may, in its sole discretion and without liability to Customer, implement a change to a Service or its network, provided that, except as otherwise specified, AT&T gives Customer three months' written notice of substantial changes to a Service's terms or description. AT&T will give Customer 12 months' written notice if AT&T withdraws a Service (or if AT&T changes this 12 month notice period). In addition to AT&T's rights to terminate the affected Attachment as specified in provision 10 of the General Terms and Conditions, AT&T reserves the right to withdraw a Service effective immediately if a third party claims that the Service or any component of the Service infringes that third party's patent or copyright. AT&T will use reasonable efforts to replace the Service with one that is at least functionally equivalent, or, if that is not reasonably possible and the Service is withdrawn, give Customer a prorated credit for any charges Customer paid for that Service in advance. In addition to AT&T's other rights to terminate as set forth in this Section 4 and/or in the General Terms and Conditions, AT&T may immediately terminate a Service when, in AT&T's opinion, Customer or any of Customer's End Users cause any part of a Service to malfunction, or for any violation of the terms and conditions of this Agreement. AT&T may also terminate a Service if Customer fails to make changes that, in AT&T's judgment, are necessary to correct such malfunction. AT&T may restore the Service to Customer when the problem has been corrected to AT&T's satisfaction.

5 Responsibilities of the Parties

A. Customer shall not resell any Service without AT&T's prior written consent.

B. Customer shall provide AT&T with sufficient, free, appropriate, and safe access to Customer facilities.

C. Customer shall be solely responsible for any results obtained from the use of the Services and Customer is responsible for obtaining all necessary governmental, regulatory, or statutory approvals for Customer's use of the Service.

D. Customer is responsible for any damages resulting from use of User Identifications under Customer's control.

E. Customer is responsible for obtaining, installing, and maintaining suitable equipment as necessary to access the Services.

F. Customer is responsible for its Content and that of any of its End Users' (including any Content hosted by Customer or any User on behalf of third parties). Customer agrees that it and its End Users' use of the Service including, without limitation, (i) will not interfere with or disrupt other network users, network services or network equipment and (ii) will comply, if applicable, with AT&T's Acceptable Use Policy for the Service (the "Acceptable Use Policy" or "AUP"), the most recent copy which is available at http://www.attbusiness.net/terms/aup.html.

G. AT&T Global Network Services maintains security procedures for Customer's data while it is stored on or transmitted over equipment and facilities that AT&T Global Network Services controls. Customer is responsible for management of Customer data stored on or transmitted over AT&T's network. Such management includes, but is not limited to, backup and restoration of data, erasing data from disk space Customer controls, and Customer's selection of the security features and options that AT&T Global Network Services offers as Services. Apart from the Services AT&T provides to Customer under this section, Customer is responsible to develop and maintain the management and security procedures that Customer deems appropriate, such as application logon security and encryption of data, to protect Customer's information.

H. For purposes of performing network maintenance, AT&T may need to work with data stored in such locations as data buffers on equipment AT&T controls or in frame relay packets in order to view address headers and data records. During such maintenance activities, AT&T is not able to avoid seeing portions of data transmitted over the AT&T Global Network. Such data is fragmented and out of context. The origin of the data may or may not be identifiable. Although AT&T Global Network Services uses reasonable efforts to notify Customer of such maintenance activity, particularly when it is being performed at Customer's request, it may not be practical to notify all customers whose data may be displayed during maintenance. Accordingly, Customer agrees that AT&T may use, copy, display, store, transmit, translate, rearrange or reformat, view and distribute Customer data internally both domestically and internationally for such purposes. AT&T agrees not to reverse assemble, reverse compile, or to disclose to third parties the information that Customer transmits over AT&T's network while using the Services (unless required by law, court order, an authorized government entity, or as otherwise authorized by Customer). Although AT&T carefully handles Customer's data as described above, for best data protection, Customer should encrypt any data which Customer does not want AT&T or others to comprehend. Encrypted data may be viewed, but it is not intelligible.

I. Customer understands that the Software and technical information (including, but not limited to, Services and training) provided under this Agreement are subject to U.S. and other nations' export and import laws and regulations and any use or transfer of such Software and technical information must be authorized under all such applicable laws and regulations. Customer agrees not to use, distribute, transfer or transmit the Software or technical information (even if incorporated into other products) except in compliance with export and import laws and regulations of the U.S. and other applicable nations.

J. Customer and AT&T Global Network Services may communicate with each other by electronic means and such communication is acceptable as a signed writing to the extent permissible under applicable law. A User Identification contained in an electronic

document is sufficient to verify the identity of the sender and the document's authenticity.

K. Customer is responsible for all User Identifications under Customer's control, including but not limited to their passwords. A password is an identifier that should be kept secret and is used in conjunction with an account ID and user ID to verify identification and validate access to the AT&T network. The password is determined and set by the individual End User. The End User is responsible for proper control and management of the password. Unless Customer requests otherwise, there is a maximum number of days (normally between 60 and 180 days depending upon the type of password) an End User's password is valid. When the number of days exceeds the maximum, the End User must change the password. However, Customer can specifically request non expiring network passwords for Customer's account codes. Due to the increased potential of security breaches, AT&T strongly discourages the use of non-expiring passwords. AT&T recommends that if Customer chooses to use non-expiring passwords, Customer inform third parties who also may be subject to the resulting increased security risk of Customer's decision (e.g. owners of applications that Customer is accessing via AT&T's network and third parties sharing data base/data file access with Customer.) Customer is responsible for implementing access security controls to all of Customer's applications.

L. AT&T may require Customer to upgrade the bandwidth of Customer's dedicated Internet egress connection(s) at such time as AT&T, in consultation with Customer, determines that such egress location's capacity may be exceeded as a result of Customer's use of the Service. Furthermore, when Customer's dedicated Internet egress connection is included, or required, as part of a Service, the features and options of the dedicated Internet egress connection may be limited from those which may ordinarily be available for such a dedicated connection. Please see the Service Guide for details.

6 AT&T Customer Premise Equipment ("AT&T CPE"

A. Equipment ("AT&T CPE"), to be installed on Customer premises solely for the purpose of enabling AT&T to provide AT&T Global Network Services to Customer. AT&T CPE includes equipment, with any and all features, conversions, upgrades, elements, or accessories, or any combination provided by AT&T Global Network Services in connection with the Services Customer orders hereunder. AT&T CPE may include licensed internal code and Software to which AT&T or a third party owns all copyrights. No license is granted to Customer for Software or licensed internal code. Such AT&T CPE is and will remain AT&T's or AT&T's lessor's asset and will not become a fixture or realty. No right, title, or interest in or to AT&T CPE, licensed internal code associated with it, or any related planning information is passed to Customer. As appropriate, AT&T will provide Customer physical planning information for the AT&T CPE. Customer agrees to comply with the information in order to provide an environment meeting AT&T's specifications. AT&T will: 1) install applicable AT&T CPE at Customer's site unless AT&T specifies otherwise; 2) maintain the AT&T CPE in accordance with its specifications; and 3) be responsible for all dismantling, return, removal, and shipping charges for the AT&T CPE.

B. Customer agrees to: 1) provide and pay for the physical space and electrical power for the AT&T CPE at Customer's site; 2) provide at no cost to AT&T, adequate security to protect the AT&T CPE from theft, loss, damage, or misuse; 3) be responsible for loss of or damage to the AT&T CPE caused by Customer's or Customer's agents' intentional acts or

negligence; 4) provide AT&T or its designee with all assistance reasonably necessary to permit AT&T access to Customer's site to perform inspection, installation, preparation for return or maintenance (including engineering changes) as is appropriate; 5) not alter, move to other locations, or transfer the AT&T CPE and any licensed internal code or Software associated with it to anyone else without AT&T's prior written approval; 6) keep the AT&T CPE and any licensed internal code or Software associated with it free from all liens, charges, or encumbrances; 7) affix and keep in a prominent place on the AT&T CPE any marking or label AT&T requires; and 8) return to AT&T, or permit AT&T or its designee to remove, at AT&T's option, the AT&T CPE and any licensed internal code or Software associated with it along with any physical planning documentation when the Service is withdrawn or terminated.

7 Licensing of Materials

"Materials" shall mean any literary works or other works of authorship, that AT&T may deliver to Customer as part of the Service. The term Materials does not include Software or licensed internal code. AT&T hereby grants Customer a non-exclusive, paid-up, restricted license to use, execute, reproduce, display, perform, and distribute (only within Customer's business enterprise) any Materials provided as part of a Service.

8 Additional Disclaimers and Limitation of Liability

A. AT&T does not warrant that AT&T will correct all defects in a Service, Materials, or Software. AT&T does not guarantee that AT&T's security procedures will prevent the loss of, alteration of, or improper access to, Customer information. Unless specified otherwise in this Attachment, AT&T provides Services, Materials, or non-AT&T Services WITHOUT WARRANTIES OF ANY KIND except as required by law. However non-AT&T manufacturers, suppliers, or publishers may provide their own warranties to Customer.

B. In lieu of Section 9.2, sub (iii) of the General Terms and Conditions, the following shall apply: (iii) the amount of any other actual direct damages up to the greater of U.S. $100,000 or the charges (if recurring or usage, 12 months' charges apply) for the Service that is the subject of the claim.

C. In addition to the limitations set forth in Section 9.0 of the General Terms and Conditions, except for those claims set forth in item (i) of Section 9.2, under no circumstances shall AT&T or its Affiliates be liable for any third party claims for damages against Customer.

D. AT&T makes no claims or warranties regarding the security or encryption of any data sent using a Service or the ability of tunneling or any other method of data transmission to protect or secure any data sent using the Service or any other option or feature of the Service offered under this Attachment. AT&T ACCEPTS NO RESPONSIBILITY, NOR ANY LIABILITY FOR THE SECURITY OR ENCRYPTION OF CUSTOMER DATA, WHETHER OR NOT AT&T HAS INSTALLED ANY DATA ENCRYTION, SECURITY OR TUNNELLING SERVICE.

E. In addition, use of a Service may impede, degrade or substantially impair the operation of

any software or applications which make use of the Service. AT&T ACCEPTS NO RESPONSIBILITY, NOR ANY LIABILITY FOR THE OPERATION OR INTEROPERABILITY OF ANY SOFWARE WHEN IT IS USED IN CONJUNCTION WITH ANY SERVICE.

9 Traveling User Support

A. For certain Services, as specified in the applicable sections of the Service Guide, out of region roaming, also referred to as "Traveling User Support", is intended to allow the End User to access the Service when traveling to selected countries where there is a relationship established with Affiliates and other local service providers. Traveling User Support provides remote terminal access using supported terminal devices in the countries that support global network traveling Users.

B. AT&T will provide Customer a list of the Affiliates and other local service providers and the terminal devices and emulation Software supported upon Customer's request.

C. It is Customer's responsibility to comply with the use and licensing terms and conditions of the Software provider.

D. Traveling User Support is intended to allow Customer's End Users to access on an occasional basis when Customer's End Users travel. If Customer needs access from an international location for an extended period, for example, longer than a month or more than three months in a year, Customer must obtain a local account ID and user ID from the Affiliate or other local service provider AT&T will determine what constitutes occasional use.

E. AT&T may change the procedures for Traveling User Support access upon notice to Customer.

F. Customer is responsible for compliance with all applicable laws, including but not limited to, complying with all matters related to the import and export of technical data, computer equipment and Software.

G. Customer should also note that as a traveling user guest in a country, Customer also agrees to comply with all applicable laws, regulations, or conventions in the country where Customer's transaction is performed.

H. Customer agrees that the country Affiliate or other local service provider whose services Customer is using as a traveling user has no liability to Customer under any circumstances. The local service provider of Customer's account ID and user ID is liable only according to the limitations of liability as specified in the General Terms and Conditions and the Additional Terms and Conditions.

10 Help Desk Support

A. All problems, questions or requests for assistance regarding the AT&T Global Network Services ordered hereunder should be made to AT&T Global Network Services' help desk. Problems may be reported by telephone, or electronically using the NOTIFY function from the AT&T Global Network sign-on screen.

B. Help desk support is available 24 hours per day, each day of the year. AT&T makes available to Customer electronic problem reporting via the customer support system ("CSS"). CSS allows the electronic logging of incidents and questions via the NOTIFY function. CSS is available 24 hours per day, each day of the year, except for periods of maintenance. CSS scheduled maintenance is Saturdays 04:00 EST through 07:00 EST and Sundays 03:00 EST through 05:00 EST. AT&T shall notify Customer in advance of any planned maintenance that is necessary outside the scheduled maintenance.

C. Customer defines the severity of a problem when the problem is reported. The following definitions are provided as guidance to assist Customer to appropriately assign the severity level of a problem. These guidelines may be changed at any time by AT&T via the Service Guide for a Service.

Severity	*Definition*
1	Critical problem which stops Customer from functioning. The network, Service or product is unusable and Customer is unable to do any productive work.
2	Major problem with severe impact on Customer's business, but does not stop it from functioning. The network, Service or product is interrupted or severely degraded and Customer is unable to work at expected levels of performance and productivity.
3	Minor problem which does not seriously affect Service or network availability or functionality used in the Customer's business. Also used for severity 1 problems with a 100% bypass but awaiting final resolution.
4	No problem, Customer business is not impacted and there is no significant impact to the User. Incident may be a request for Service information or a suggestion.

The time an incident starts is when a Customer speaks to the help desk or when a Customer submits an electronic NOTIFY record. The resolution time is the time at which the incident is resolved to the satisfaction of both the Customer and AT&T.

11 General

A. Nothing in this Agreement shall create or vest in Customer any right, title or interest in the Service, other than the right to use the Service under the terms and conditions of this Agreement.

B. AT&T's performance obligations under this Attachment shall be solely to Customer, and not to any third party. Other than as expressly set forth herein, this Agreement shall not be deemed to provide third parties with any remedy, claim, right of action, or other right.

C. Customer and AT&T are both independent contractors. Neither party is an agent, legal representative, partner, joint venture, franchisee, employee, or servant of the other party for any purpose.

D. Except for the rights and obligations set forth in Section 9.0 herein, all Customer's rights and all AT&T Global Network Services' obligations are valid only in the United States and Puerto Rico.

AT&T Internet Transport Services

Additional Terms and Conditions for Government

Additional Terms and Conditions - DSL

These Additional Terms and Conditions, together with the AT&T Internet Services General Terms and Conditions, set forth the terms and conditions ("Agreement") pursuant to which AT&T will provide AT&T Internet Transport Services which the Government customer ("You" and "Yours") now orders or subsequently orders during the term of AT&T's IT Schedule contract with the General Services Administration.

1 Definitions

A. Capitalized terms used but not defined in this Attachment are defined elsewhere in the Agreement.

B. **"Sales Order"** for each Service Component details specific provisioning related information for Your order and is completed after the signature of the Agreement, in consultation with You. It is usually completed during any AT&T technical interviews for the Service.

C. **"Service"** means the MIS or DSL Service Components You order under this Attachment, as more fully described in the Service Guide.

E. **"Scheduled Service Activation Date"** for each Service Component is the date scheduled by AT&T for Your Service Component to be activated, as may be specified in the Sales Order for Your Service.

F. Except as specified below, the **"Service Activation Date"** for a Service Component means the date Your Service is activated, as more fully described in the Service Guide. The Service Activation Date for any DSL Service Components You order which are eligible for self-installation shall be the earlier of the following: (i) the date You install the Service Component, or (ii) seven (7) days after date when the self-installation kit is sent to You. Please see the Service Guide for further details.

G. **"Service Component"** refers to the individual portions of the Service You order under this Attachment, as these components are more fully described in the Service Guide.

H. The **"Service Guide"** consists of the standard AT&T service descriptions and other information relating to each of the Services offered under this Attachment, as amended from time to time, and is located at http://www.att.com/abs/serviceguide or such other designated location.

I. **"Service Period"** for each Service Component consists of the Initial Service Period for such Service Component and all applicable Renewal Service Periods for such Service Component (as described in Section 2B).

2 Pricing, Renewals, Orders and Billing

A. The pricing for each Service, including any discounts or discount plans, is shown in this agreement and is fixed for the Service Period for DSL and for MIS; provided that IP mail service shall be provided at the prices specified in Your Pricing Schedule or Service Guide, which prices may be revised at any time upon 30 days' notice and which notice may be

provided in writing, by email or website posting. After the Service Period for the MIS Service, and for the DSL Service, the pricing will revert to the then-current full list price and no discounts or discount plans shall apply.

B. All Sales Orders shall be for an Initial Service Period of at least one year, unless otherwise agreed between us in the order.

C. For the MIS Service, after the Initial Service Period, such Service shall continue under the terms of the Agreement, for additional consecutive 1-year Renewal Service Periods for each Service Component unless either party provides the other written notice that it does not desire to renew such Service. If You do not wish to renew, You must notify AT&T in writing within 30 days after the last day of the applicable Initial or Renewal Service Period and such notice will not be effective until 30 days after AT&T receives such notice.

D. For the DSL Service, after the Initial Service Period for each Service Component You order, such Service will continue in effect on a month-to-month basis until terminated by either party giving the other party at least thirty (30) days' prior written notice and You will be responsible for payment of any charges incurred as of the termination date. Furthermore, any IP Mail Service hereunder is provided on a month-to-month basis.

E. The options and features of each Service Component which apply to You are contained in a Sales Order or any similar document used for provisioning Your Service Component.

F. Unless otherwise specified in this Agreement, billing for any Service Component You order will begin on the Service Activation Date of the Service. However, if by Your actions or omissions the Service Activation Date for Your Service Component does not occur by the Scheduled Service Activation Date, billing will begin on the day after the Scheduled Service Activation Date for such Service.

3 Termination

A. You may terminate any Service at any time during the Contract Term if You replace such with a new Internet-related service from AT&T having a Service Period and a revenue value which is equal to or greater than the remaining Service Period and revenue value of the Service You are terminating.

B. Either party may elect, during the Initial Service Period or at any time thereafter, to terminate the IP Mail Service provided hereunder upon 30 days' written notice to the other party.

C. For any cancellation(s) of DSL Service under this Attachment, AT&T may allow You to cancel the Service via a telephone call by Your central point of contact to the AT&T DSL Internet Service Customer Care Center. Please refer to the Service Guide for further details.

D. You may terminate any Service during the Initial Service Period, or for the MIS Service during any subsequent Renewal Service Period, by giving AT&T at least sixty (60) days' prior written notice and payment of any applicable Termination Charges set forth in this Agreement for such Service.

E. AT&T may terminate this Agreement or any Service upon written notice to You if You do not comply with the AUP (as defined in Section 4B).

F. AT&T may terminate the MIS Service, in whole or in part, upon ninety (90) days written

notice to You if AT&T decides to discontinue such Service, in whole or in part. AT&T may terminate the DSL Service, in whole or in part, upon thirty (30) days written notice to You if AT&T decides to discontinue such Service, in whole or in part.

G. Upon termination of any Service by You under this Section 3, or AT&T under Section 3E, You will be responsible for payment of any charges incurred as of the termination date, as well as access facilities termination charges or other charges incurred by AT&T as a result of such termination.

H. In addition, You will be responsible for the Termination Charges set forth in this Agreement or the applicable Pricing Schedule of each Service You order if You terminate a Service under Section 3D of these Additional Terms and Conditions or if AT&T terminates or suspends such Service or the Agreement under the Responsibilities of Parties or the Termination Sections of the General Terms and Conditions or under Section 3E or 4F of these Additional Terms and Conditions.

I. Either party may elect, during the Initial Service Period or at any time thereafter, to terminate the IP Mail Service provided hereunder upon 30 days' written notice to the other party.

J. For MIS Service Only, the Termination Charge during the Initial Service Period, or any subsequent Renewal Service Period will consist of: (1) 100% of the scheduled payments for the MIS Service for each of the months remaining through month 12 of the relevant Service Period; (2) 50% of the scheduled payments for the MIS Service, if any, remaining through month 24 of the relevant Service Period; (3) 25% of the scheduled payments for the MIS Service, if any, remaining through month 36 of the relevant Service Period; (4) all discounts, if any, received by you; and (5) any access facilities cancellation charges or other charges incurred by AT&T as a result of such cancellation.

K. For any cancellation(s) of DSL Service under this Attachment, AT&T may allow You to cancel the Service via a telephone call by Your central point of contact to the AT&T DSL Internet Service Customer Care Center. Please refer to the Service Guide for further details.

4 Responsibilities of the Parties

A. AT&T shall provide Service to You in accordance with the Service Guide, as the same may be revised from time to time.

B. You acknowledge that You have read, agree to be bound by and shall assure that Users will comply with AT&T's Acceptable Use Policy for the Service (the "AUP"). The AUP details the types of activities that are prohibited for Your or Users use of the Service, including but not limited to interfering with or disrupting other network users, network services or network equipment. The AUP may be revised from time to time, and is available for review at: www.ipservices.att.com/policy.html, or at such other address as AT&T may specify by posting or email notice ('AUP Website'). If You wish to be notified of any modifications to the AUP, please visit the AUP Website and subscribe to our AUP modification notification service. By subscribing to this AUP modification service, You agree to be bound by the terms and conditions contained therein.

C. Any of the AT&T Security Services which You may order, such as Managed Firewall Services, are intended for use in conjunction with a single AT&T-approved Internet

connection to Your network. AT&T does not monitor other additional Internet connections which may be maintained by You unless AT&T Security Services are ordered for the connections in question. You acknowledge and understand that multiple Internet connections, unless protected by an Internet security product or service, may significantly decrease Your overall network security level. To the extent You deem necessary, You will implement security procedures and controls necessary to limit access to the Service and You will maintain facilities and procedures external to the Service for reconstruction of lost or altered files, data or programs. AT&T SECURITY SERVICES SUCH AS MANAGED FIREWALL SERVICE (MFWS) AND MANAGED INTRUSION DETECTION SERVICE (MIDS) DO NOT GUARANTEE NETWORK SECURITY OR PREVENT SECURITY INCIDENTS. AT&T ACCEPTS NO RESPONSIBILITY, NOR ANY LIABILITY FOR THE SECURITY OF YOUR ELECTRONIC ENVIRONMENT, WHETHER OR NOT AT&T HAS INSTALLED ANY INTERNET SECURITY EQUIPMENT OR SERVICE.

D. Except for IP addresses expressly registered in Your name, all IP addresses, AT&T-based domain names and telephone numbers shall remain, at all times, property of AT&T and shall be nontransferable and You shall have no right to use such IP addresses upon termination or expiration of this Service Order Attachment.

E. You shall arrange for and timely provide the necessary access to any rights of way, equipment space, conduit, electrical power and environmental conditions which AT&T deems necessary to provide, maintain or remove the facilities required for any of the Services on all applicable premises without charge or cost to AT&T. AT&T will also have the right to obtain access to any of its wiring installed in any conduit provided by You at any splice or junction box. You also agree to provide AT&T with a safe place to work and to protect all AT&T facilities against fire, theft, vandalism or other casualty. You shall be responsible for compliance with all governmental and third party requirements relating to such equipment space and conduit.

F. Unless otherwise agreed to in writing by the parties, You may not resell or otherwise make the DSL Internet Service available to third parties. If there is any violation of this resale provision, AT&T shall have the right to suspend and/or terminate Your Service, at its option. Additionally, You may not permit, by action or omission, the sharing of any mailbox, software, password or ID. You shall ensure that only the specific individual that is authorized to register for a mailbox will use such mailbox.

G. You agree to comply, and to use best efforts to cause all Users to comply, with United States law regarding the transmission of technical data and Software which is exported from the United States.

H. AT&T will not provide support directly to nor interface with any User. You are responsible for (i) selecting the Users that You permit to access each Service; (ii) implementing with Your Users appropriate terms, conditions, and measures to ensure that all Users comply with the terms and conditions of the Agreement; (iii) establishing Your Users' rights to access each Service; (iv) providing training, copying, installing and distributing any Software (and updates, if any) to Your Users; and (v) in the case of any Service You are permitted to resell under this Attachment, billing and collecting any amounts You elect to charge Your Users in connection with such Service.

5 Additional DSL Only Terms

A. You understand that AT&T will make commercially reasonable efforts to provision DSL. However, provisioning of Service is contingent upon the availability of DSL capable local loops to Your location being made available to AT&T. If no such DSL-capable local loop is available to AT&T, then Service will not be provisioned and if delivery of the local loop is delayed, then provisioning of Your Service will be delayed as well.

B. You understand that the actual bandwidth that can be delivered on a DSL capable loop will not be determined until the time of service installation. The actual bandwidth may be different than the estimated bandwidth provided to You by AT&T at the time of ordering the service and may vary during the Service Period.

C. The DSL Single User Class of Service is offered for use with a single computer only. Use of more than one computer with this Class of Service, via a network or in any other fashion, is a material breach of this Agreement and may result in monetary penalties, suspension or termination.

6 Equipment and Software

A. Equipment (including all fiber optic or other facilities) and any included Software provided to You by AT&T for use in conjunction with the Service (collectively, "Equipment"), if any, will be subject to the terms, conditions and licenses set forth in this Attachment or in the Service Guide.

B. You, at Your own expense, will provide in a timely manner: (i) an equipment room environmentally compliant with local laws and other environmental conditions as specified by AT&T; (ii) reasonable access to the Equipment at times specified by AT&T; (iii) adequate work space, heating/cooling, light, ventilation, and electrical outlets and (iv) for any Service which requires a telephone line, as detailed in the Service Guide, you shall also make available to AT&T for diagnostic purposes a local exchange carrier dedicated inbound telephone (POTS) line, which shall not be used by you for any other purpose while Service is being provided. You shall also arrange for and timely provide the necessary access to any rights of way, which AT&T deems necessary to provide, maintain or remove the facilities required for any of the Services on all applicable premises without charge or cost to AT&T. Equipment shall not be removed, relocated, modified, interfered with, or attached to non-AT&T equipment by You without prior written authorization from AT&T.

C. Except for Purchased Equipment, all rights, title and interest to Equipment will remain with AT&T or its suppliers, as the case may be. You will, however, be liable for risk of loss to such Equipment on Your premises and repair charges or the replacement cost of such Equipment if it is damaged or lost, unless caused by AT&T or its agents or suppliers.

D. Title to, and risk of loss of, Equipment, including associated software, purchased by You under this Agreement (collectively, "Purchased Equipment"), will pass to You as of the delivery date, upon which date, AT&T will have no further obligations of any kind (including without limitation operation and maintenance) with respect to that Purchased Equipment. AT&T hereby assigns software licenses for Purchased Equipment to You, and You agree to be bound by the terms of those licenses. AT&T retains a purchase money security interest in each item of Purchased Equipment until You pay for it in full; You

appoint AT&T as Your agent to sign and file a financing statement to perfect AT&T's security interest.

E. On termination of the applicable Service, You will return all Equipment (other than fully-paid for Purchased Equipment) in the same condition as originally installed, ordinary wear and tear excepted, or You will pay for restoration of the Equipment to such condition. AT&T will not be obligated to restore the premises to its original condition. If You do not return the Equipment to an AT&T specified address, then You shall be liable for its purchase price (if Purchased Equipment) or then-current market value (if other than Purchased Equipment).

F. ALL EQUIPMENT PROVIDED HEREUNDER IS PROVIDED ON AN "AS IS" BASIS AND YOU ASSUME THE RISK ASSOCIATED WITH USE, REPAIR AND MAINTENANCE OF SUCH EQUIPMENT AND SOFTWARE.

G. ANY IP MAIL SERVICE PROVIDED BY AT&T IN CONNECTION WITH THE SERVICE IS PROVIDED ON AN "AS IS" BASIS AND YOU ASSUME ALL RISK IN CONNECTION WITH YOUR AND USERS' USE THEREOF. IN NO EVENT SHALL AT&T BE LIABLE FOR THE PERFORMANCE OR THE FAILURE TO PERFORM OF ANY VIRUS PROTECTION PROVIDED IN CONNECTION WITH THE SERVICE.

7 Domain Name System Services

A. You may, from time to time, request AT&T to host Your IP addresses or domain names, or ask AT&T to submit to a domain name registrar, on your behalf, domain name registration applications (each, an "Application"), for domain names you select (each, a "Domain Name"). If AT&T elects, in its sole discretion, to perform such service, the Applications shall name AT&T as the Technical Contact responsible for such domain name. AT&T is not a domain name registrar. AT&T's charges for hosting any of Your IP addresses or domain names, or charges for any Domain Name management related services (collectively the "DNS Services") do not include the domain name registrar's fees. You shall be responsible for, and shall promptly pay, all DNS Services and domain name registrar's fees. You represent and warrant that (i) all statements on the Application are true and correct; (ii) none of the requested Domain Names or Your use of any Domain Name will interfere with the rights of any third party, infringe upon any trademark, service mark or other personal, moral or property right; and (iii) You have a legitimate business purpose for registering each Domain Name, which purpose relates to your purchase of the Service.

B. With respect to any Domain Name, AT&T may elect to terminate or suspend its hosting of or provision of any DNS Services with respect to any or all of your Domain Names immediately upon written notice if (i) an Application is rejected; (ii) the Domain Name Registration is revoked or placed on "hold" or assigned to a third party; or (iii) AT&T receives or becomes aware of any complaints, conflicting claims, disputes or court orders regarding the Domain Name.

C. "Downstream Provider Services" or "DSP Services" are defined as those activities of an entity or company which relate to the provision of IP address or DNS Services to third parties, where such entity or company does not own the IP addresses being used as part of such IP address or DNS services. Examples of the entities or companies which provide DSP Services include, but are not limited to, Internet Service Providers, Internet Access

Providers, Application Service Providers and resellers.

D. AT&T DNS Services are only available to that portion of the Your Service which does not involve DSP Services. DNS Services are not available to third parties given access to any AT&T Service by You, regardless of whether such parties have purchased services from You. In addition, You will be allowed to host one domain name owned by the You on AT&T's name servers as part of Your DNS Service. Any additional domain name hosting which AT&T may offer to provide You will incur additional charges.

E. THE DNS SERVICES ARE PROVIDED ON AN "AS IS" BASIS. IN NO EVENT SHALL AT&T BE LIABLE FOR PROVIDING, FAILING TO PROVIDE, OR THE PERFORMANCE OR THE FAILURE TO PERFORM OF THE DNS SERVICES WITHOUT LIMITING THE FOREGOING, AT&T DOES NOT MAKE ANY WARRANTIES REGARDING THE HOSTING OF ANY OF YOUR IP ADDRESSES OR DOMAIN NAMES, THE SUCCESSFUL REGISTRATION OF ANY DOMAIN NAME, THE TIME OF SUBMISSION OF THE APPLICATION OR YOUR RIGHT TO CONTINUED USE OF A DOMAIN NAME AFTER REGISTRATION. AT&T IS NOT REQUIRED TO PARTICIPATE IN ANY DISPUTES RELATING TO THE APPLICATION OR THE REGISTRATION OF ANY DOMAIN NAME.

AT&T VPN Tunneling Service

Additional Terms and Conditions for Government

Additional Terms and Conditions for Government

These Additional Terms and Conditions, together with the AT&T Internet Services General Terms and Conditions, set forth the terms and conditions ("Agreement") pursuant to which AT&T will provide AT&T VPN Tunneling Service (AVTS) which the Government customer ("You" and "Yours" and "Customer" and "Customer's") now orders or subsequently orders during the term of AT&T's IT Schedule contract with the General Services Administration.

You are entitled to use existing MIS Service Components in conjunction with the AVTS Service. However, such Service Components shall thereafter become subject to the terms and conditions of this Agreement and Your use of such Service Components with the AVTS Service shall constitute Your consent to the transfer of such Service Components to these additional terms and conditions for AVTS Services. Notwithstanding the above, the pricing of any such Service Components will be as set forth this Agreement and such pricing shall be incorporated herein by reference. Furthermore, Customer acknowledges that the features and functionality of such MIS Service Components may differ from that which was originally available under the additional terms and conditions for Internet Transport Services. Please see the Service Guide for further details.

1 Definitions

Capitalized terms used but not defined in this Attachment are defined elsewhere in the Agreement.

A. **"AVTS Service"** or **"Service"** means collectively all of the Service Components You order under this Attachment, as more fully described in the Service Guide.

B. A **"Hub"** is any central Site you designate that You wish to use with the Service which terminates Your or Users Spoke Tunnels.

C. **"Internet Access"** refers to any Internet technology method (dedicated or dial) You use at a location in order to access the Internet, whether or not provided by AT&T.

D. **"Internet Egress"** refers to any dedicated Internet technology method You use at a location in order to terminate Your or Users Tunnels, whether or not provided by AT&T.

E. **"Managed Internet Service"** or **"MIS"** refers to the AT&T provided dedicated Internet connection sold by AT&T under the name 'Managed Internet Service' at any Site where You receive Service. MIS, as used for the AVTS Service, refers only to those elements of the MIS Service which are available for the AVTS Service. Please see the Service Guide for more details.

F. **"Minimum Service Activation Period"** for a Service Component is the minimum period of time which a Service Component must remain in existence after such Service Component's Service Activation Date.

G. **"Sales Order"** for a Service Component details specific provisioning and related information for Your order(s) under this Agreement and is completed after the signature of the Agreement, in consultation with You, for any such orders . It is usually completed

during any AT&T Service Component technical interviews. All Sales Orders must undergo an AT&T technical review before they are accepted by AT&T for implementation. Furthermore, AT&T and Customer agree that acceptance and/or confirmation of the details of Sales Orders may be accomplished electronically.

H. **"Scheduled Service Activation Date"** for each Service Component is the Service Activation Date scheduled by AT&T for the activation of such Service Component, and as may be specified in the Sales Order.

I. **"Service Activation Date"** for a Site You order means the date when the initial AT&T-provided Service Components of the AVTS Service at that Site are enabled for Customer use, whether You make use of the Service Component or not, as more fully described in the Service Guide.

J. **"Service Component"** refers to the individual portions of the Service You order under this Agreement, such as MIS, as these are more fully described in the Service Guide.

K. The **"Service Guide"** consists of the standard AT&T service descriptions and other information relating the Service offered under this Attachment, as amended from time to time, and is located at http://www.att.com/abs/serviceguide or such other designated location (the "Service Guide").

L. **"Service Period"** for Your Service begins on the Initial Service Period for Your Service, continues through all applicable Renewal Service Periods and ends when Your Service is terminated.

M. **"Site"** refers to any location, dedicated or dial, where You have Internet Access or Internet Egress which is used in conjunction with the Service.

N. **"Site ISP"** refers to the Internet Service Provider You use for connecting Your Spokes to the Internet.

O. A **"Spoke"** is any Site which has a dial or dedicated Internet connection that You wish to use with the Service, which is designed to connect via a Tunnel to a Hub location.

P. **"Third Party Site Internet Access"** refers to the AVTS Service You order for a Spoke where the connection from Your Spoke to the Internet is not provided pursuant to this Agreement or any subsequent Addenda.

Q. **"Third Party Site Internet Egress"** refers to the AVTS Service You order for a Hub where the connection from Your Hub to the Internet is not provided pursuant to this Attachment or any subsequent Addenda.

R. **"Tunnel"** refers to the process whereby AT&T establishes virtual private network connections over the Internet for Your data traffic between Your Hub(s) and Spokes.

S. "Virtual Private Network" refers to any service, system or other technological arrangement that is designed to make use of any type of Tunnel, data security, encryption or authentication method.

2 Pricing, Renewals, Orders And Billing

A. The pricing for Your Service during the Initial Service Period, including any discounts or discount plans, is shown on the Pricing Schedules included in this Attachment and is fixed

for the Service Period.

B. For any MIS or Firewall Service Components, the Minimum Service Activation Period is one year, regardless of when such Service Components are ordered during the Service Period.

C. After the Initial Service Period for the Service, Your Service shall continue under the terms of the Agreement for additional consecutive 1-year Renewal Service Periods unless either party provides the other written notice that it does not desire to renew such Service. If You do not wish to renew, You must notify AT&T in writing within 30 days after the last day of the applicable Initial or Renewal Service Period and such notice will not be effective until 30 days after AT&T receives such notice

D. The options and features of each Service Component which apply to You are contained in a Sales Order or any similar document used for provisioning Your Service. E. Unless otherwise specified on a Pricing Schedule, billing for any Service Component You order will begin on the Service Activation Date of the Service. However, if by Your actions or omissions, the Service Activation Date does not occur by the Scheduled Service Activation Date, billing will begin on the day after the Scheduled Service Activation Date.

3. Termination And Initial Satisfaction Guarantee

A. If for any reason You are not satisfied with the performance of Your Service within 90 days after the Service Activation Date of the first Service Component ordered under this Attachment, then, solely during such 90-day period, You may terminate the Service by giving AT&T at least 30 days' prior written notice of termination.

B. If for any reason other than Your act or omission or a force majeure event (as described in the Force Majeure provision of the General Terms and Conditions) AT&T does not install a Service Component within 30 days after such Service Component's Scheduled Service Activation Date, You shall have a one-time right to terminate such Service Component by notifying AT&T in writing before the Service Activation Date for such Service Component.

C. You may terminate the Service in whole, or any individual Service Component(s), at any time during the Service Period if You replace the Service, or such Service Component(s), with a new Internet-related service from AT&T having a Service Period and revenue value

equal to or greater than the remaining Service Period and revenue value of the Service or Service Component You are terminating.

D. You may terminate the Service in whole, or any individual Service Component(s), during the Service Period by giving AT&T at least 60 days' prior written notice and payment of any applicable Termination Charges.

E. AT&T may terminate or suspend this Attachment or any Service Components upon written notice to You if You do not comply with the AUP (as defined in Section 4B).

F. AT&T may also terminate the Service, in whole or in part, upon ninety (90) days written notice to You if AT&T decides to discontinue the Service, in whole or in part.

G. Upon termination of the Service by You under this Section 3, or AT&T under Section 3E,

You will be responsible for payment of any charges incurred as of the termination date, as well as access facilities termination charges or other charges incurred by AT&T as a result of such termination.

H. In addition, You will be responsible for the Termination Charges set forth in this Attachment or the applicable Pricing Schedule of each Service Component You order if You terminate the Service, or an individual Service Component, under Section 3D of this Attachment or if AT&T terminates or suspends such Service or this Attachment or the Agreement under the Responsibilities of Parties or the Termination Sections of the General Terms and Conditions or under Section 3E or 4F of these Additional Terms and Conditions

I. The Termination Charge for each Service Component during the Initial Service Period, or any subsequent Renewal Service Period will consist of: (1) 100% of the scheduled payments for such Service Component for each of the months remaining through month 12 of the relevant Service Period; (2) 50% of the scheduled payments for such Service Component, if any, remaining through month 24 of the relevant Service Period; (3) 25% of the scheduled payments for such Service Component, if any, remaining through month 36 of the relevant Service Period; (4) all discounts, if any, received by you; and (5) any access facilities cancellation charges or other charges incurred by AT&T as a result of such cancellation.

4 Responsibilities of the Parties

A. AT&T shall provide Service to You in accordance with the Service Guide, as the same may be revised from time to time.

B. You acknowledge that You have read, agree to be bound by and shall assure that Users will comply with AT&T's Acceptable Use Policy for the Service (the "AUP"). The AUP details the types of activities that are prohibited for Your or Users use of the Service, including but not limited to interfering with or disrupting other network users, network services or network equipment. The AUP may be revised from time to time, and is available for review at: www.ipservices.att.com/policy.html, or at such other address as AT&T may specify by posting or email notice ('AUP Website'). If You wish to be notified of any modifications to the AUP, please visit the AUP Website and subscribe to our AUP modification notification service.

By subscribing to this AUP modification service, You agree to be bound by the terms and conditions contained therein.

C. Any of the AT&T Security Services which You may order, such as Managed Firewall Services, are intended for use in conjunction with a single AT&T-approved Internet connection to Your network. AT&T does not monitor other additional Internet connections which may be maintained by You unless AT&T Managed Firewall Services are ordered for the connections in question. You acknowledge and understand that multiple Internet connections, unless protected by an Internet security product or service, may significantly decrease Your overall network security level. To the extent You deem necessary, You will implement security procedures and controls necessary to limit access to the Service and

You will maintain facilities and procedures external to the Service for reconstruction of lost or altered files, data or programs. D. AT&T SECURITY SERVICES, SUCH AS

MANAGED FIREWALL SERVICE, DO NOT GUARANTEE NETWORK SECURITY OR PREVENT SECURITY INCIDENTS. AT&T ACCEPTS NO RESPONSIBILITY, NOR ANY LIABILITY FOR THE SECURITY OF YOUR ELECTRONIC ENVIRONMENT, WHETHER OR NOT AT&T HAS INSTALLED ANY INTERNET SECURITY EQUIPMENT OR SERVICE.

E. Except for IP addresses expressly registered in Your name, all IP addresses, AT&T-based domain names and telephone numbers shall remain, at all times, property of AT&T and shall be nontransferable and You shall have no right to use such IP addresses upon termination or expiration of this Service Order Attachment.

F. You shall arrange for and timely provide the necessary access to any rights of way, equipment space, conduit, electrical power and environmental conditions which AT&T deems necessary to provide, maintain or remove the facilities required for any of the Services on all applicable premises without charge or cost to AT&T. AT&T will also have the right to obtain access to any of its wiring installed in any conduit provided by You at any splice or junction box. You also agree to provide AT&T with a safe place to work and to protect all AT&T facilities against fire, theft, vandalism or other casualty. You shall be responsible for compliance with all governmental and third party requirements relating to such equipment space and conduit.

G. Except to the extent required by law, You may not resell or otherwise make the AVTS Service or any of its Service Components available to third parties. If there is any violation of this resale provision, AT&T shall have the right to suspend and/or terminate Your Service, at its option. In addition, You may not permit, by action or omission, the sharing of any software, password or ID.

H. You agree to comply, and to use best efforts to cause all Users to comply, with United States law regarding the transmission of technical data and Software which is exported from the United States.

I. AT&T will not provide support directly to nor interface with any User. You are responsible for (i) selecting the Users that You permit to access each Service; (ii) implementing with Your Users appropriate terms, conditions, and measures to ensure that all Users comply with the terms and conditions of the Agreement; (iii) establishing Your Users' rights to access each Service; (iv) providing training, copying, installing and distributing any Software (and updates, if any) to Your Users; and (v) in the case of any Service You are permitted to resell under this Agreement , billing and collecting any amounts You elect to charge Your Users in connection with such Service.

J. All of Your Hub Sites must be dedicated Internet connections of T-1 (1.54 Mbps) or greater bandwidth.

5 Third Party Internet Access & Egress

A. The AVTS Service allows, in certain instances detailed in the Service Guide, individual Service Components to be connected to Service via Third Party Internet Access for Spokes and Third Party Internet Egress for Hubs. Some Options, such as the Broadband VPN Option, are only available with Third Party Internet Access currently. In the event that You are making use of Third Party Internet Access or Third Party Internet Egress, the following

terms and conditions in this Section 5 shall apply, in addition to any which may be contained in this Agreement.

B. For any of Your Sites with Third Party Internet Access or Third Party Internet Egress, the following requirements apply, in addition to any mentioned in the Service Guide:

(i) You must provide all required static and globally routable IP addresses for AT&T to use for all AT&T required or provided CPE;

(ii) You or Your Site ISP may not make use of any filtering protocols which could interfere with the Service.

(iii) You may not interpose any firewall or network address translation devices between AT&T's gateway Equipment and the Your Third Party Internet Access or Egress connection.

(iv) No packet alterations are allowed between AT&T provided or required Equipment.

(v) You agree to allow AT&T to conduct any and all diagnostic tests needed for maintenance and troubleshooting.

(vi) You agree to maintain analog dial-up capability for the Contract Term, on a dedicated 24x7 basis for out of bandwidth maintenance, monitoring and management of any AT&T required or provided CPE.

(vii) Any service level agreements or service targets which may be available for the AVTS Service shall not apply to Your Service.

Please See the Service Guide for further details.

. By signing this Agreement, You represent to AT&T that, for any and all of Your Sites that are used with the Service for Third Party Internet Access or Third Party Internet Egress, Your Site ISP does not in any way prohibit or restrict the use of the Site ISP's service in conjunction with a Virtual Private Network, as this is defined in Section 1.

D. In the event that Your Site ISP restricts or prohibits Your or User's use of a Site in conjunction with a Virtual Private Network, You may not make any use of such Site in conjunction with the AVTS Service. Any violation of this Section shall be considered a material breach of the Agreement. AT&T ACCEPTS NO RESPONSIBILITY, NOR ANY LIABILITY FOR YOUR OR USERS' USE OF THE AVTS SERVICE WHERE SUCH USAGE VIOLATES ANY AGREEMENT, ACCEPTABLE USAGE POLICY, SERVICE DESCRIPTION OR OTHER DIRECTIVE FROM ANY SITE ISP. YOU SHALL DEFEND, INDEMNIFY AND HOLD HARMLESS AT&T FROM AND AGAINST ALL DAMAGES ARISING OUT OF YOUR OR USERS' USE OF THE AVTS SERVICE WHERE SUCH USAGE VIOLATES ANY AGREEMENT, ACCEPTABLE USAGE POLICY, SERVICE DESCRIPTION OR OTHER DIRECTIVE FROM ANY SITE ISP.

E. The AVTS Service will not give any support or assistance for any service(s) provided by a Site ISP. You are required to seek all help and support from Your Site ISP for any problems or issues that arise with any service(s) provided at Your Site(s) by Your Site ISP(s). In addition, the AVTS Service will not trouble shoot any problems or issues which may arise with Your Service once it determines that the issue or problems are in any way related to the service provided by a Site ISP for the Spoke in question. PURSUANT TO THIS SERVICE ORDER ATTACHMENT, AT&T ACCEPTS NO RESPONSIBILITY,

NOR ANY LIABILITY FOR ANY SERVICE(S) PROVIDED AT YOUR SITE(S) BY YOUR SITE ISP(S).

F. Currently, the Broadband VPN Service Option is only available with Third Party Internet Access for Your Spokes. Use of the Option with any other Internet access method is prohibited until such time, if any, when You and AT&T execute an Addendum allowing any such alternate access.

6 Supplemental Service Terms

A. The AVTS Service is available in several configurations, all of which feature a many to few configuration, meaning that the Spokes are interconnected, via Tunnels, solely to the Hub location(s). Any other arrangement must be agreed to in writing in advance by the parties. Furthermore, AT&T, at its discretion, may change the method of access, or allow other methods of access for the Spokes. In such event, AT&T may require You to sign a separate Agreement or Addendum before allowing any such method of access.

B. AT&T makes no claims or warranties regarding the security or encryption of any data sent using the AVTS Service or the ability of tunneling or any other method of data transmission to protect or secure any data sent using the Service or any other option or feature of the Service offered under this Agreement. AT&T ACCEPTS NO RESPONSIBILITY, NOR ANY LIABILITY FOR THE SECURITY OR ENCRYPTION

OF YOUR DATA, WHETHER OR NOT AT&T HAS INSTALLED ANY DATA ENCRYTION, SECURITY OR TUNNELLING SERVICE.

C. In addition, use of the AVTS Service may impede, degrade or substantially impair the operation of any software or applications that make use of the Service. AT&T ACCEPTS NO RESPONSIBILITY, NOR ANY LIABILITY FOR THE OPERATION OR INTEROPERABILITY OF ANY SOFWARE WHEN IT IS USED IN CONJUNCTION WITH THE AVTS SERVICE.

D. As part of Your use of the AVTS Service, AT&T may require You to upgrade the bandwidth of any of Your Sites at such time as AT&T, in consultation with You, determines that the Site's capacity may be exceeded.

E. The installation of some Sites may be delayed and may occur only after the AVTS Service becomes generally available. AT&T reserves the right to schedule any installation as AT&T chooses, including in a 'phased' manner. The method of installation is determined once the Technical Provisioning Document is accepted by AT&T.

7 Equipment and Software

A. Equipment (including all fiber optic or other facilities) and any included Software provided to You by AT&T for use in conjunction with the Service (collectively, "Equipment"), if any, will be subject to the terms, conditions and licenses set forth in this Attachment or in the Service Guide.

B. You, at Your own expense, will provide in a timely manner: (i) an equipment room environmentally compliant with local laws and other environmental conditions as specified by AT&T; (ii) reasonable access to the Equipment at times specified by AT&T; (iii)

adequate work space, heating/cooling, light, ventilation, and electrical outlets and (iv) for any Service which requires a telephone line, as detailed in the Service Guide, you shall also make available to AT&T for diagnostic purposes a local exchange carrier dedicated inbound telephone (POTS) line, which shall not be used by you for any other purpose while Service is being provided. You shall also arrange for and timely provide the necessary access to any rights of way, which AT&T deems necessary to provide, maintain or remove the facilities required for any of the Services on all applicable premises without charge or cost to AT&T. Equipment shall not be removed, relocated, modified, interfered with, or attached to non-AT&T equipment by You without prior written authorization from AT&T.

C. Except for Purchased Equipment, all rights, title and interest to Equipment will remain with AT&T or its suppliers, as the case may be. You will, however, be liable for risk of loss to such Equipment on Your premises and repair charges or the replacement cost of such Equipment if it is damaged or lost, unless caused by AT&T or its agents or suppliers.

D. Title to, and risk of loss of, Equipment, including associated software, purchased by You under this Agreement (collectively, "Purchased Equipment"), will pass to You as of the delivery date, upon which date, AT&T will have no further obligations of any kind (including without limitation operation and maintenance) with respect to that Purchased Equipment. AT&T hereby assigns software licenses for Purchased Equipment to You, and You agree to be bound by the terms of those licenses. AT&T retains a purchase money security interest in each item of Purchased Equipment until You pay for it in full; You appoint AT&T as Your agent to sign and file a financing statement to perfect AT&T's security interest.

E. On termination of the applicable Service, You will return all Equipment (other than fully-paid for Purchased Equipment) in the same condition as originally installed, ordinary wear and tear excepted, or You will pay for restoration of the Equipment to such condition. AT&T will not be obligated to restore the premises to its original condition. If You do not return the Equipment to an AT&T specified address, then You shall be liable for its purchase price (if Purchased Equipment) or then-current market value (if other than Purchased Equipment).

F. ALL EQUIPMENT PROVIDED HEREUNDER IS PROVIDED ON AN "AS IS" BASIS AND YOU ASSUME THE RISK ASSOCIATED WITH USE, REPAIR AND MAINTENANCE OF SUCH EQUIPMENT AND SOFTWARE.

8 Domain Name System Services

A. You may, from time to time, request AT&T to host Your IP addresses or domain names, or ask AT&T to submit to a domain name registrar, on your behalf, domain name registration applications (each, an "Application"), for domain names you select (each, a "Domain Name"). If AT&T elects, in its sole discretion, to perform such service, the Applications shall name AT&T as the Technical Contact responsible for such domain name. AT&T is not a domain name registrar. AT&T's charges for hosting any of Your IP addresses or domain names, or charges for any Domain Name management related services (collectively the "DNS Services") do not include the domain name registrar's fees. You shall be responsible for, and shall promptly pay, all DNS Services and domain name registrar's fees. You represent and warrant that (i) all statements on the Application are true and correct; (ii) none of the requested Domain Names or Your use of any Domain Name will

interfere with the rights of any third party, infringe upon any trademark, service mark or other personal, moral or property right; and (iii) You have a legitimate business purpose for registering each Domain Name, which purpose relates to your purchase of the Service.

B. With respect to any Domain Name, AT&T may elect to terminate or suspend its hosting of or provision of any DNS Services with respect to any or all of your Domain Names immediately upon written notice if (i) an Application is rejected; (ii) the Domain Name Registration is revoked or placed on "hold" or assigned to a third party; or (iii) AT&T receives or becomes aware of any complaints, conflicting claims, disputes or court orders regarding the Domain Name.

C. "Downstream Provider Services" or "DSP Services" are defined as those activities of an entity or company which relate to the provision of IP address or DNS Services to third parties, where such entity or company does not own the IP addresses being used as part of such IP address or DNS services. Examples of the entities or companies which provide DSP Services include, but are not limited to, Internet Service Providers, Internet Access Providers, Application Service Providers and resellers.

D. AT&T DNS Services are only available to that portion of the Your Service which does not involve DSP Services. DNS Services are not available to third parties given access to any AT&T Service by You, regardless of whether such parties have purchased services from You. In addition, You will be allowed to host one domain name owned by the You on AT&T's name servers as part of Your DNS Service. Any additional domain name hosting which AT&T may offer to provide You will incur additional charges.

E. THE DNS SERVICES ARE PROVIDED ON AN "AS IS" BASIS. IN NO EVENT SHALL AT&T BE LIABLE FOR PROVIDING, FAILING TO PROVIDE, OR THE PERFORMANCE OR THE FAILURE TO PERFORM OF THE DNS SERVICES. WITHOUT LIMITING THE FOREGOING, AT&T DOES NOT MAKE ANY WARRANTIES REGARDING THE HOSTING OF ANY OF YOUR IP ADDRESSES OR DOMAIN NAMES, THE SUCCESSFUL REGISTRATION OF ANY DOMAIN NAME, THE TIME OF SUBMISSION OF THE APPLICATION OR YOUR RIGHT TO CONTINUED USE OF A DOMAIN NAME AFTER REGISTRATION. AT&T IS NOT

REQUIRED TO PARTICIPATE IN ANY DISPUTES RELATING TO THE APPLICATION OR THE REGISTRATION OF ANY DOMAIN NAME.

The following terms and conditions apply to dial connectivity used in conjunction with AVTS

1 The Service

The particulars of the Service applicable to Customer shall be as set forth in: (1) the Sales Order(s) (the "Sales Order") completed by AT&T in consultation with Customer as applicable, as well as, any Sales Orders that may be completed by AT&T and the Customer thereafter; (2) the appropriate section of the Service Guide and (3) any other applicable Supplement for Custom Solution. Capitalized terms used but not defined in this Addendum are defined elsewhere in the

Agreement.

A. Applicable sections of the Service Guide and/or Supplements for Custom Solution may contain terms in addition to those AT&T specifies in this Agreement. B. The Service becomes subject to the terms of this Agreement when AT&T accepts Customer's order and the Customer (1) uses the Service or related Software, or allowing others to do so or the Customer (2) makes any payment for the Service or related Software.

C. The AT&T dial network is generally available each day of the year. AT&T reserves the right to schedule reasonable hours for maintenance or system changes at AT&T's sole discretion or to perform emergency maintenance as may be required.

D. An "End User" is defined as a User or other party accessing a Service or any data, equipment or related Software within a Service or any User or any other party who makes use of User Identifications obtained from Customer or obtained via any other authorization or means under Customer's control. User Identifications are generally required to access a Service that AT&T provides. User Identifications include account, user ID, password, application name and other identifiers.

E. "Dial Connectivity" or "Dial Services" refers to the dial connection used in conjunction with the AVTS Service.

2 Support Services

A. When AT&T accepts Customer's order for the Services, AT&T provides support Services such as those specified in this item and in items B and C below. AT&T will provide User Identifications to Customer which enable access to Services. "User Identifications" are a code or codes, such as a user ID or a password, which enable authorization or access to Software, programs, data, or equipment as part of a Service. Customer may authorize as "User" a duly authorized representative of CUSTOMER who has access to and makes use of service, or uses Service by providing a User Identification to the End User.

B. AT&T will provide an activity account and invoice account to Customer. An activity account is an alphanumeric identification used to identify Customer for the placement of Customer's orders and for the use of the Services. Customer may request more than one activity account. An invoice account is an alphanumeric identification used to control Customer's invoicing. Generally there is one invoice account for each activity account. AT&T charges Customer a monthly charge called a "base charge" for each invoice account Customer requests.

3 Pricing and Billing

A. Amounts are due upon receipt of invoice and payable as AT&T specifies.

B. One-time, recurring and usage charges may be based on measurements of actual or authorized use and shall be specified in the applicable sections of the Service Guide or other applicable Supplements for Custom Solution.

C. AT&T may change the invoicing procedures upon three months' prior written notice to

Customer.

D. Additional charges may apply (such as custom solutions set forth in Supplements for Custom Solution, special handling or travel related expenses). Additional charges will be agreed to in advance in the applicable Service Guide or Supplements for Custom Solution.

E. Customer will pay all surcharges and fees imposed by any government (e.g. Universal Services Fund payments, pay phone services, Prescribed Interexchange Carrier Charges), including those that are passed through to AT&T by its suppliers, for Services AT&T provides to Customer.

4 Termination

A. In addition to AT&T's other rights to terminate as set forth in this Section 4 and/or in the General Terms and Conditions , AT&T may immediately terminate a Service when, in AT&T's opinion, Customer or any of Customer's End Users cause any part of a Service to malfunction, or for any violation of the terms and conditions of this Agreement. AT&T may also terminate a Service if Customer fails to make changes that, in AT&T's judgment, are necessary to correct such malfunction. AT&T may restore the Service to Customer when the problem has been corrected to AT&T's satisfaction.

5 Responsibilities of the Parties

A. Customer shall not resell any Service without AT&T's prior written consent.

B. Customer shall provide AT&T with sufficient, free, appropriate, and safe access to Customer facilities.

C. Customer shall be solely responsible for any results obtained from the use of the Services and Customer is responsible for obtaining all necessary governmental, regulatory, or statutory approvals for Customer's use of the Service.

D. Customer is responsible for any damages resulting from use of User Identifications under Customer's control.

E. Customer is responsible for obtaining, installing, and maintaining suitable equipment as necessary to access the Services.

F. Customer is responsible for its Content and that of any of its End Users' (including any Content hosted by Customer or any User on behalf of third parties).

G. Customer agrees that it and its End Users' use of the Service including, without limitation, (i) will not interfere with or disrupt other network users, network services or network equipment and (ii) will comply, if applicable, with AT&T's Acceptable Use Policy for the Service (the "Acceptable Use Policy"), the most recent copy which is available at http://www.attbusiness.net/terms/aup.html.

H. Within five days after the Effective Date, Customer will provide AT&T with a forecast of its anticipated use of the Service by access city, for each of the first six months that the Service is anticipated to be available. Not later than the 15th day of each month after the First Service Date, Customer will provide AT&T with a forecast of its anticipated use of the Service for each of the following six months. Customer will make its best commercially

reasonable efforts to provide accurate forecasts, basing each forecast on the best information then available to Customer (including information pertaining to planned promotional activities) and reasonable assumptions. AT&T will provide an electronic template that Customer must use to submit its forecasts; AT&T may from time to time change that template. If Customer fails to provide a forecast in accordance with this paragraph, AT&T may suspend the Service or terminate this Agreement and may immediately invoice Customer for Termination Charges.

I. AT&T maintains security procedures for Customer's data while it is stored on or transmitted over equipment and facilities that AT&T controls. Customer is responsible for management of Customer data stored on or transmitted over AT&T's network. Such management includes, but is not limited to, backup and restoration of data, erasing data from disk space Customer controls, and Customer's selection of the security features and options that AT&T offers as Services. Apart from the Services AT&T provides to Customer under this Agreement , Customer is responsible to develop and maintain the management and security procedures that Customer deems appropriate, such as application logon security and encryption of data, to protect Customer's information.

J. For purposes of performing network maintenance, AT&T may need to work with data stored in such locations as data buffers on equipment AT&T controls or in frame relay packets in order to view address headers and data records. During such maintenance activities, AT&T is not able to avoid seeing portions of data transmitted over the AT&T network. Such data is fragmented and out of context. The origin of the data may or may not be identifiable. Although AT&T uses reasonable efforts to notify Customer of such maintenance activity, particularly when it is being performed at Customer's request, it may not be practical to notify all customers whose data may be displayed during maintenance. Accordingly, Customer agrees that AT&T may use, copy, display, store, transmit, translate, rearrange or reformat, view and distribute Customer data internally both domestically and internationally for such purposes. AT&T agrees not to reverse assemble, reverse compile, or to disclose to third parties the information that Customer transmits over AT&T's network while using the Services (unless required by law, court order, an authorized government entity, or as otherwise authorized by Customer). Although AT&T carefully handles Customer's data as described above, for best data protection, Customer should encrypt any data which Customer does not want AT&T or others to comprehend. Encrypted data may be viewed, but it is not intelligible.

K. Customer understands that the Software and technical information (including, but not limited to, Services and training) provided under this Agreement are subject to U.S. and other nations' export and import laws and regulations and any use or transfer of such Software and technical information must be authorized under all such applicable laws and regulations. Customer agrees not to use, distribute, transfer or transmit the Software or technical information (even if incorporated into other products) except in compliance with export and import laws and regulations of the U.S. and other applicable nations.

L. Customer and AT&T may communicate with each other by electronic means and such communication is acceptable as a signed writing to the extent permissible under applicable law. A User Identification contained in an electronic document is sufficient to verify the identity of the sender and the document's authenticity.

M. Customer is responsible for all User Identifications under Customer's control, including but not limited to their passwords. A password is an identifier that should be kept secret and is

used in conjunction with an account ID and user ID to verify identification and validate access to the AT&T network. The password is determined and set by the individual End User. The End User is responsible for proper control and management of the password. Unless Customer requests otherwise, there is a maximum number of days (normally between 60 and 180 days depending upon the type of password) an End User's password is valid. When the number of days exceeds the maximum, the End User must change the password. However, Customer can specifically request non expiring network passwords for Customer's account codes. Due to the increased potential of security breaches, AT&T strongly discourages the use of non-expiring passwords. AT&T recommends that if Customer chooses to use non-expiring passwords, Customer inform third parties who also may be subject to the resulting increased security risk of Customer's decision (e.g. owners of applications that Customer is accessing via AT&T's network and third parties sharing data base/data file access with Customer.) Customer is responsible for implementing access security controls to all of Customer's applications.

6 AT&T Customer Premise Equipment ("AT&T CPE")

A. AT&T may provide Customer Premises Equipment ("AT&T CPE"), to be installed on Customer premises solely for the purpose of enabling AT&T to provide AT&T Services to Customer. AT&T CPE includes equipment, with any and all features, conversions, upgrades, elements, or accessories, or any combination provided by AT&T in connection with the Services Customer orders hereunder. AT&T CPE may include licensed internal code and Software to which AT&T or a third party owns all copyrights. No license is granted to Customer for Software or licensed internal code. Such AT&T CPE is and will remain AT&T's or AT&T's lessor's asset and will not become a fixture or realty. No right, title, or interest in or to AT&T CPE, licensed internal code associated with it, or any related planning information is passed to Customer. As appropriate, AT&T will provide Customer physical planning information for the AT&T CPE. Customer agrees to comply with the information in order to provide an environment meeting AT&T's specifications. AT&T will: 1) install applicable AT&T CPE at Customer's site unless AT&T specifies otherwise; 2) maintain the AT&T CPE in accordance with its specifications; and 3) be responsible for all dismantling, return, removal, and shipping charges for the AT&T CPE.

B. Customer agrees to: 1) provide and pay for the physical space and electrical power for the AT&T CPE at Customer's site; 2) provide at no cost to AT&T, adequate security to protect the AT&T CPE from theft, loss, damage, or misuse; 3) be responsible for loss of or damage to the AT&T CPE caused by Customer's or Customer's agents' intentional acts or negligence; 4) provide AT&T or its designee with all assistance reasonably necessary to permit AT&T access to Customer's site to perform inspection, installation, preparation for return or maintenance (including engineering changes) as is appropriate; 5) not alter, move to other locations, or transfer the AT&T CPE and any licensed internal code or Software associated with it to anyone else without AT&T's prior written approval; 6) keep the AT&T CPE and any licensed internal code or Software associated with it free from all liens, charges, or encumbrances; 7) affix and keep in a prominent place on the AT&T CPE any marking or label AT&T requires; and 8) return to AT&T, or permit AT&T or its designee to remove, at AT&T's option, the AT&T CPE and any licensed internal code or Software associated with it along with any physical planning documentation when the Service is withdrawn or terminated.

7 Licensing of Materials

"Materials" shall mean any literary works or other works of authorship, that AT&T may deliver to Customer as part of the Service. The term Materials does not include Software or licensed internal code. AT&T hereby grants Customer a non-exclusive, paid-up, restricted license to use, execute, reproduce, display, perform, and distribute (only within Customer's business enterprise) any Materials provided as part of a Service.

8 Additional Disclaimers and Limitation of Liability

A. AT&T does not warrant that AT&T will correct all defects in a Service, Materials, or Software. AT&T does not guarantee that AT&T's security procedures will prevent the loss of, alteration of, or improper access to, Customer information. Unless specified otherwise in this Addendum, AT&T provides Services, Materials, or non-AT&T Services WITHOUT WARRANTIES OF ANY KIND except as required by law. However non-AT&T manufacturers, suppliers, or publishers may provide their own warranties to Customer.

B. In lieu of Section 9.2, sub (iii) of the General Terms and Conditions , the following shall apply: (iii) the amount of any other actual direct damages up to the greater of U.S. $100,000 or the charges (if recurring or usage, 12 months' charges apply) for the Service that is the subject of the claim.

C. In addition to the limitations set forth in Section 9.0 of the General Terms and Conditions , except for those claims set forth in items (i) and (iii) of Section 9.2, under no circumstances shall AT&T or its Affiliates be liable for any third party claims for damages against Customer.

9 Traveling User Support

A. For certain Services, as specified in the applicable sections of the Service Guide, out of region roaming, also referred to as "Traveling User Support", is intended to allow the End User to access the Service when traveling to selected countries where there is a relationship established with Affiliates and other local service providers. Traveling User Support provides remote terminal access using supported terminal devices in the countries that support global network traveling Users.

B. AT&T will provide Customer a list of the Affiliates and other local service providers and the terminal devices and emulation Software supported upon Customer's request.

C. It is Customer's responsibility to comply with the use and licensing terms and conditions of the Software provider.

D. Traveling User Support is intended to allow Customer's End Users to access on an occasional basis when Customer's End Users travel. If Customer needs access from an international location for an extended period, for example, longer than a month or more than three months in a year, Customer must obtain a local account ID and user ID from the Affiliate or other local service provider AT&T will determine what constitutes occasional use.

E. AT&T may change the procedures for Traveling User Support access upon notice to

Customer.

F. Customer is responsible for compliance with all applicable laws, including but not limited to, complying with all matters related to the import and export of technical data, computer equipment and Software.

G. Customer should also note that as a traveling user guest in a country, Customer also agrees to comply with all applicable laws, regulations, or conventions in the country where Customer's transaction is performed.

H. Customer agrees that the country Affiliate or other local service provider whose services Customer is using as a traveling user has no liability to Customer under any circumstances. The local service provider of Customer's account ID and user ID is liable only according to the limitations of liability as specified in the General Terms and Conditions and Additional Terms and Conditions for the Service.

10 Help Desk Support

A. All problems, questions or requests for assistance regarding the Service ordered hereunder should be made to the appropriate AT&T help desk. Problems may be reported by telephone, or electronically using the NOTIFY function from the AT&T sign-on screen.

11 General

A. Nothing in this Agreement shall create or vest in Customer any right, title or interest in the Service, other than the right to use the Service under the terms and conditions of this Agreement.

B. AT&T's performance obligations under this Addendum shall be solely to Customer, and not to any third party. Other than as expressly set forth herein, this Agreement shall not be deemed to provide third parties with any remedy, claim, right of action, or other right.

C. Customer and AT&T are both independent contractors. Neither party is an agent, legal representative, partner, joint venture, franchisee, employee, or servant of the other party for any purpose.

D. Except for the rights and obligations set forth in Section 9 herein, all of Customer's rights and all AT&T obligations are valid only in the United States and Puerto Rico.

RPost Government General Terms and Conditions

RPost Government General Terms and Conditions

1 Definitions

Capitalized terms used in this Agreement without definition will have the meanings set forth below:

"Billing Information" means the information that RPost will include on each customer bill, namely, the time (date and time) the (R)egistered e-Mail was sent and the name of the Sender.

"Customization Request" means a request to have RPost provide a customized form of the Service, pursuant to an attached Customization Schedule.

"End-User" means any individual authorized by Customer to send (R)egistered e-Mail pursuant to this Agreement.

"Gateway Partner" means a company or Internet Service Provider whose servers are equipped to provide End-Users with access to the Service.

"Global Network" means access to the global (R)egistered e-Mail infrastructure and network of which there is a charge added to (R)egistered e-Mail fees equal to 18% of the cost per (R)egistered e-Mail.

"National Mail Server™" means the servers owned and operated by RPost and equipped to provide the Service.

"(R) Enabler Software" means proprietary filter software owned by RPost to enable Client to use and access (R)egistered e-Mail. This is sometimes referred to as "Filter" software.

"Record Information" means the information that RPost will retain solely for purposes of resolving a billing dispute, trouble-shooting the Service, or that RPost may be required by law or Governmental regulation to retain, including, Sender Name, Sender e-mail address, date and time that the (R)egistered e-Mail was sent, to whom the e-mail was addressed, the size of the e-mail file, the size of any attachment, the Internet Service Provider, and information listed within the parenthesis on the subject field of the (R)egistered e-Mail.

"(R)egistered e-Mail" means a service created and owned by RPost and powered by RPost technology that tracks the delivery of e-mail and provides a return receipt to the sender of e-mail with a time/date seal and authenticates both the contents and any attachments of an e-mail message with hashing algorithms and digital encryption signatures, providing verification that a message was sent and delivered to the recipient's mail server.

"(R)egistered e-Mail Sponsors" means a Government agency or private entity that enters into an agreement with RPost to endorse and offers its brand in conjunction with (R)egistered e-Mail.

"RPost" means RPost International Limited, a corporation organized and doing business under the laws of Bermuda using the trade name RPost, as well as any RPost subsidiaries or affiliates.

If the Customer is within the Territory of the United States, this agreement is explicitly between RPost Inc., a corporation organized and doing business under the laws of Delaware, and the Customer; and "RPost" means, in this case, RPost Inc. the Delaware company.

"Sender" means any End-User who sends (R)egistered e-Mail and has engaged in a relationship with RPost.

"Service" means the Service powered by RPost technology that tracks the delivery of e-mail and provides a return receipt to the sender of e-mail with a time/date seal.

"Strategic Affiliate" means a corporate client that provides periodic feedback about RPost's service for the purpose of improving the service.

"Territory" means (R)egistered e-Mail territory Jurisdiction.

2 Services

2.1 Implementation. RPost grants Customer a license to use RPost (R)Enabler Software, enabling Customer and/or End-Users to send (R)egistered e-Mail by routing their outbound (R)egistered e-Mail through National Mail Servers™ and the Global Network for (R)egistered e-Mail.

2.2 Customization Request. Customer may submit a Customization Request for customized services to be provided by RPost, pursuant to a Customization Schedule.

2.3 RPost Awareness Program. RPost will offer each new Customer a 30-day e-mail awareness program, consisting of five informational e-mails that the Customer may forward to its End-Users describing the Service and offering suggestions for using the Service. In addition, RPost will send by e-mail, in a PDF file or similar file format, an implementation and user manual to each new Customer.

3 Taxes

3.1 Customer shall pay all shipping charges, taxes (excluding those on RPost Inc.'s net income) and other similar charges (and any related interest and penalties) relating to the sale, transfer of ownership, installation, license, use or provision of the Services, except to the extent a valid tax exemption certificate is provided by Customer to RPost Inc. prior to the delivery of Services consistent with FAR 52.229-3 (FEDERAL, STATE, AND LOCAL TAXES) (JAN 1991). RPost Inc. may assess, as separate line items on invoices, charges to recover its costs associated with Universal Service Fund charges, Primary Interchange Carrier Charges, Payphone Access Charges, and other charges that may be assessed, or changed, from time to time by the federal Government or state or local Governments.

4 Proprietary Rights

4.1 Proprietary Rights. Customer hereby agrees and acknowledges that RPost is the sole and

exclusive owner of RPost technology, processes and services (including the (R)Enabler Software), and all RPost copyrights, trademarks, service marks, trade secrets, patents, and other proprietary rights used in connection with the Service. Customer agrees and acknowledges that all (R)egistered e-Mail Sponsors are the sole and exclusive owners of their copyrights, trademarks, and service marks used in connection with the Service. Customer agrees that "(R)egistered e-Mail", "Registered e-Mail", "(R)egistered Receipt", "Registered Receipt", "(R)", "(O)", "(C)", and National Mail Server are among the service marks and trademarks owned by RPost.

Customer shall not reverse engineer, copy, modify, distribute, or transfer to any third party any of the (R)Enabler Software or related products. Customers also shall not distribute or provide access to the Service to any third party, except as provided by this Agreement.

4.2 Promotional Activities. Subject to pre-approval by Customer; Customer agrees to permit RPost to use Customer's logo and name on the RPost Web site. Customer agrees to be listed in RPost's published customer reference list and discussed in RPost's case studies in connection with Customer's use of RPost Services. Customer also grants RPost the right to issue, subject to pre-approval by Customer: (i) press releases announcing the Customer relationship and identifying the type of Services purchased by Customer; (ii) joint public statements; (iii) published articles in trade publications; (iv) reference calls (including media and analyst calls).

5 Confidential Information

5.1 Definition. Confidential Information shall include any non-public information regarding the products, services or business of a party (and, if either party is bound to protect the confidentiality of any third party's information, of a third party) where such information is marked or otherwise communicated as being "proprietary" or "confidential" or the like, or where such information should, by its nature, be reasonably considered to be confidential and/or proprietary as well as information specifically identified as Confidential Information in this Agreement.

5.2 Disclosures and Use. Each party agrees to safeguard the confidentiality of Confidential Information of the other party with the same degree of care as it applies to its own confidential information, but in no case less than reasonable care. The receiving party shall use Confidential Information of the disclosing party only in performing under this Agreement and shall retain the Confidential Information in confidence and not disclose it to any third party (except as authorized under this Agreement) without the disclosing party's express written consent. The receiving party shall disclose the disclosing party's Confidential Information only to its employees and contractors who have a need to know such information for the purposes of this Agreement.

5.3 Exceptions. Notwithstanding the foregoing, each party's confidentiality obligations hereunder shall not apply to information which:

A. is already known to the receiving party prior to disclosure by the disclosing party;

B. becomes publicly available without fault of the receiving party;

C. is rightfully obtained by the receiving party from a third party without restriction as to disclosure;

D is approved for release by written authorization of the disclosing party;

E. is developed independently by the receiving party without use of the disclosing party's Confidential Information, as shown by appropriate documentation; or

F. is required to be disclosed by law or Governmental regulation, provided that the receiving party provides reasonable notice to disclosing party of such required disclosure and reasonably cooperates with the disclosing party in limiting such disclosure.

5.4 Remedies. Notwithstanding any other provisions of this Agreement, the disclosing party shall be entitled to seek a court injunction to protect its interests in the event of any breach or threatened breach by the receiving party of this Section.

6 Privacy

6.1 RPost Collection and Use of Customer Information. RPost collects the following information when a Customer uses the Services: name of the Customer, name of Sender, E-mail address of the intended recipient, size of the e-mail file sent, and information listed within parenthesis on the subject field of the (R)egistered e-Mail. This information is used by RPost for billing purposes and the provision of the Service and is Confidential Information of Customer. In some instances, RPost may require that Customers provide RPost with a password to access the Service. Passwords are Confidential Information of Customer.

6.2 RPost Access to Contents of (R)egistered e-Mail. Customer understands and agrees that RPost will have access to the content of (R)egistered e-Mail only in the event that such access is required (i) to repair a National Mail Server™ or otherwise ensure the smooth operation of the Service; (ii) to investigate or prevent the abuse of the Service; or (iii) as otherwise provided in Section 5 of this Agreement. Such contents are Confidential Information of Customer and subject to the provisions of Section 12.3, below.

7 No Warranties

7.1 Failure to Provide Service. Customer will be notified if their (R)egistered e-Mail is undeliverable or if the service is unavailable. Customer's sole and exclusive remedy for any failure to provide the Service is that RPost will re-perform the applicable Service. Rpost has no other responsibility or liability for any such outage or any failure to deliver an e-mail.

7.2 Disclaimer of Warranties. Neither RPost nor any (R)egistered e-Mail Sponsor controls Customer's desktop computer hardware, software and network services provided by

Customer to allow access to the Service. The computer desktop and network performance and/or nonperformance can impair or disrupt Customer's connections to e-mail, the Internet, or portions thereof, and the transmission of data. Accordingly, RPost and all (R)egistered e-Mail Sponsors disclaim any and all liability resulting from or relating to such events. The service is provided "as is" and "with all faults," and RPost makes no additional warranties or representations, express or implied, including without limitation warranties of merchantability or fitness for a particular purpose or title or arising from a course of dealing, usage or trade practice. (R)egistered E-mail Sponsors make no warranties or representations whatsoever to customer.

8 Indemnification

8.1 Customer Indemnification Obligations. Customer shall indemnify and hold RPost and any (R)egistered e-Mail Sponsor harmless against any claims, losses, liabilities, damages and expenses (including reasonable attorneys' fees) arising out of or connected with data or content in Customer's systems or Web site or in Customer's or End-User's e-mail or otherwise used or transmitted by Customer or End-User, or arising out of or connected with Customer's business activities.

8.2 Conditions to Indemnification. The indemnity obligations set forth in this Section are contingent upon: (a) the indemnitee giving prompt written notice to the indemnitor of any such claim(s); (b) the indemnitor at its option having sole control of the defense or settlement of the claim; and (c) at the indemnitor's request and expense, the indemnitee cooperating in the investigation and defense of such claim(s).

9 Limitation of Liability; Limitation of Remedy

9.1 Limitation of Damages. In no event shall RPost or any (R)egistered e-Mail Sponsor be liable for any indirect, consequential, incidental, special or punitive damages, including without limitation loss of use, interruption of business, loss of data or loss of profits, arising out of or in any way connected with this agreement, the service or any software applications, even if RPost has been advised of the possibility of such damages. In no way shall any (R)egistered e-Mail End-User or Customer act as an agent in a litigation against RPost or authorize an agent to represent them in a litigation against RPost. In no event will RPost have liability for any amount in excess of the amounts paid by customer under this agreement. In no event shall any (R)egistered e-Mail Sponsor be liable for any damages whatsoever arising out of or connected with this Agreement or the Service.

9.2 Customer Content. In no event shall RPost or any (R)egistered e-Mail Sponsor be responsible or liable with respect to any inaccuracy, illegality, misinformation or any violation of a third party right or interest associated with or directly or indirectly arising out of the customer's content.

9.3 Customer Equipment. RPost assumes no liability for damage to, or loss of, any Customer equipment resulting from any cause other than the gross negligence or willful misconduct of RPost. To the extent RPost is liable for any damage to, or loss of, Customer equipment

for any reason, such liability will be limited solely to the then current replacement value of Customer equipment, excluding lost data or software.

10 Term and Termination

10.1 Term. Unless terminated earlier pursuant to Sections 3.1 or 10.2, this Agreement shall commence on the Effective Date and continue for one year and will renew for successive one-year periods unless notice by either party of its intent not to renew is given thirty days prior to the end of the then current one-year term.

10.2 Effect of Termination. Upon termination of the Service, Customer must cease using the Service and the (R)Enabling Software and all rights and obligations of the parties shall cease, except for the payment obligations and as provided in Section 11.8. Termination by RPost shall not relieve Customer of the obligation to pay any fees owing to the date of termination. Upon termination of this Agreement, each party will return to the other party any Confidential Information of such other party, which is in its possession.

11 General

11.1 Relationship of Parties. Nothing in this Agreement will be construed to imply a joint venture, partnership, or agency relationship between the parties, and RPost will be considered an independent contractor when performing Services under this Agreement. Nothing contained in this Agreement shall be construed as to allow either party to create or assume any obligation on behalf of the other party for any purpose whatsoever. RPost requests that the customer provide periodic feedback about how RPost can improve the service, and in exchange for feedback, RPost will consider customer a Strategic Affiliate of RPost.

11.2 RPost Testimony. In the event that RPost personnel are subpoenaed or otherwise asked to give testimony in any disputes between a Customer and any third party which involves the Service, the Customer agrees to pay RPost for its limits and services at a rate of $200.00 per hour, plus reasonable travel and other expenses.

11.3 Assignment. Customer shall not assign any of the rights or obligations under this Agreement without the prior written consent of RPost, which consent shall not be unreasonably withheld. Notwithstanding the foregoing, Customer may assign its interest herein, upon written notice to RPost, to a subsidiary of Customer's or to an entity that acquires substantially all Customer's assets or business which expressly assume Customer's obligations. The rights and liabilities of the parties hereto will bind and inure to the benefit of its respective successors and assigns. Nothing in this agreement shall be construed as to prohibit RPost from outsourcing provision of any part of the Service or from offering the (R)egistered e-Mail service under the brand of a (R)egistered e-Mail Sponsor.

11.4 Complete Understanding; Modification. This Agreement and any purchase order issued under this agreement constitute the entire agreement between the parties relating to its subject matter and supersedes all prior agreements and understandings between the

parties with respect to its subject matter and may not be changed unless mutually agreed upon in writing by both parties. No different or additional terms set forth in a purchase order or other communication will be binding on RPost unless RPost specifically agrees in writing to such different or additional terms. An Officer of RPost is required to authorize any changes on behalf of RPost.

11.5 Notices. Any notices required or permitted hereunder must be given to the appropriate party at the address specified on the Contract Information Sheet at such other address as the party may specify in writing. Such notice will be deemed given upon personal delivery to the appropriate address or sent by certified or registered mail, (R)egistered e-Mail, commercial courier, or Fax three days after the date of mailing only for mailing, or confirmed receipt for e-mail and fax, two days for courier provided that notice of change of address will be deemed effective only upon receipt.

11.6 Governing law; consent to jurisdiction. This Agreement shall be deemed to be a contract made under, and shall be construed under the laws of federal Government contracts.

11.7 Dispute Resolution. Except as provided in Section 5, failure of the parties to this Agreement to reach agreement on any request for equitable adjustment, claim, appeal or action arising under or relating to this Agreement shall be a dispute to be resolved in accordance with the clause at FAR 52.233-1, Disputes [DEC 1998], which is incorporated herein by reference.

11.8 Survival of Obligations. The rights and obligations with respect to Proprietary Information, Confidential Information, Privacy, Warranties, Indemnification, Limited action of Liability, and Disclaimers shall survive the termination or expiration of this Agreement.

11.9 Amendments. This Agreement may not be modified or amended except by written instrument signed by an authorized representative of both parties. RPost requires authorized representative to be an Officer of RPost Inc.

11.10 Counterparts. This Agreement may be executed in counterparts, each of which shall be deemed an original, but all of which taken together shall constitute one and the same Agreement. All signed fax copies of the Agreement shall be deemed as valid as originals.

11.11 Litigation. If the Customer is involved in litigation where the (R)egistered e-Mail system is in question, the Customer is required to notify RPost and RPost reserves the right to defend the (R)egistered e-Mail system in the litigation.

12 Special Provisions

12.1 Privacy Policy. Collection of information; RPost collects the following information when End-Users use the Services: sender name, sender e-mail address, date and time that the (R)egistered e-Mail was sent, to whom the e-mail was addressed, the size of the e-mail file, the size of any attachment, the Internet Service Provider, and information listed within the parenthesis on the subject field of the (R)egistered e-Mail. This information will be used to respond to your concerns/inquiries regarding mail services or other issues

relating to the RPost.

RPost may disclose this information to an appropriate domestic or foreign Government agency for law enforcement purposes, but only upon formal request therefore specifying the applicable laws or regulations requiring disclosure. If a RPost is requested or required (by laws or regulations, interrogatories, formal requests for information or documents, subpoena civil investigative demand or other process) to disclose any Confidential Information to a legal, regulatory or Governmental authority, the RPost will so advise in writing the senders' Agency.

12.2 Access to Contents of Registered e-Mail. The Customer understands and agrees that
RPost will have access to the content of (R)egistered e-Mail, during processing, only in the event that such access is required (i) to repair a National Mail Server™ or otherwise ensure the smooth operation of the Service; (ii) to investigate or prevent the abuse of the Service; or (iii) as required by law. Such contents are Confidential Information of the Customer to the extent permitted by applicable law.

AT&T AGMEMS Software

Additional Terms and Conditions for Government

Terms and Conditions - AT&T AGMEMS Software

These Additional Terms and Conditions, together with the AT&T General Terms and Conditions, set forth the terms and conditions ("Agreement") pursuant to which AT&T will provide AT&T AGMEMS Service which the Government customer ("Customer" and "Customer's") now orders or subsequently orders during the term of AT&T's IT Schedule contract with the General Services Administration.

1 Rights to Software

The Government shall have restricted rights in noncommercial computer software required to be delivered or otherwise provided to the Government as part of the AGMEMS license.

The Contractor, its subcontractors, or suppliers are not required to provide the Government additional rights in noncommercial computer software delivered or otherwise provided to the Government with restricted rights. However, if the Government desires to obtain additional rights in such software, the Contractor agrees to promptly enter into negotiations with the Contracting Officer to determine whether there are acceptable terms for transferring such rights. All noncommercial computer software in which the Contractor has granted the Government additional rights shall be listed or described in a license agreement made part of the contract. The license shall enumerate the additional rights granted the Government.

2 License Terms and Conditions

The AGMEMS license will be sold to the Government with the following conditions:

+ The Government is entitled to one copy of the executable AGMEMS computer program to run on one defined computer system as well as computer software documentation that the Government may reproduce and distribute to all users.
+ Multiple workstations for associates can be used to access that system limited to underlying license agreements within the associated COTS software and limited by the bounds of performance capability of the system.
+ As part of the yearly maintenance fee, the Government is entitled to all fixes and new features of the AGMEMS system released in that year as well as customer support.

Terms and Conditions

Single-Site LAN IPT Additional Terms and Conditions

The following are the terms and conditions of the Customer Pass Through Software License and Software Warranty from Cisco. These terms will be passed through upon AT&T's acceptance of a customer order.

**CUSTOMER PASS THROUGH SOFTWARE LICENSE
AND SOFTWARE WARRANTY**

PLEASE READ THIS SOFTWARE LICENSE CAREFULLY BEFORE DOWNLOADING, INSTALLING OR USING CISCO OR CISCO-SUPPLIED SOFTWARE.

BY DOWNLOADING OR INSTALLING THE SOFTWARE, OR USING THE EQUIPMENT THAT CONTAINS THIS SOFTWARE, YOU ARE CONSENTING TO BE BOUND BY THIS LICENSE. IF YOU DO NOT AGREE TO ALL OF THE TERMS OF THIS LICENSE, THEN (A) DO NOT DOWNLOAD, INSTALL OR USE THE SOFTWARE, AND (B) YOU MAY RETURN THE SOFTWARE FOR A FULL REFUND, OR, IF THE SOFTWARE IS SUPPLIED AS PART OF ANOTHER PRODUCT, YOU MAY RETURN THE ENTIRE PRODUCT FOR A FULL REFUND. YOUR RIGHT TO RETURN AND REFUND EXPIRES 30 DAYS AFTER PURCHASE FROM AT&T, AND APPLIES ONLY IF YOU ARE THE ORIGINAL PURCHASER.

The following terms govern your use of the Software except to the extent a particular program (a) is the subject of a separate written agreement with Cisco or (b) includes a separate "click-on" license agreement as part of the installation and/or download process. To the extent of a conflict between the provisions of the foregoing documents, the order of precedence shall be (1) the written agreement, (2) the click-on agreement, and (3) this Software License.

1 License

Subject to the terms and conditions of and except as otherwise provided in this agreement, Cisco Systems, Inc. or the Cisco Systems, Inc. subsidiary licensing the Software, if sale is not directly by Cisco Systems, Inc. ("Cisco"), and its suppliers grant to Customer ("Customer") a nonexclusive and nontransferable license, except in accordance with Cisco's then current re licensing policy, to use the specific Cisco program modules, feature set(s) or feature(s) for which Customer has paid the required license fees (the "Software"), in object code form only or the form that is commercially made available by Cisco. In addition, the foregoing license shall also be subject to the following limitations, as applicable:

Nothing in this Software License shall prohibit use of the Software by a third party installation or maintenance provider, on a limited and temporary basis, for the sole purpose of installation or maintenance of the End User's Software during the duration of the Software License. Customer shall remain responsible for the limited and temporary use of the Software by the third party or maintenance provider. Use of a single Software License by multiple simultaneous End Users is not authorized unless otherwise expressly authorized in Cisco's end user's documentation.

+ Unless otherwise expressly provided in the documentation, Customer shall use the

Software solely as embedded in, for execution on, or where the applicable documentation permits installation on non-Cisco equipment for communication with Cisco equipment, or as otherwise specified in Cisco product catalog, user documentation, owned or leased by Customer

+ Customer's use of the Software shall be limited to use on a single hardware chassis, on a single central processing unit, as applicable, on such greater number of chassis's or central processing units as Customer may have paid AT&T the required license fee, or used as designated in Cisco's product catalog, user documentation or web site for the software

+ Customer's use of the Software shall also be limited, as applicable and set forth in Customer's purchase order or in Cisco's product catalog, user documentation, or web site, at the time of purchase, to a maximum number of (a) seats (i.e. users with access to the installed Software), (b) concurrent users, sessions, ports, and/or issued and outstanding IP addresses, and/or (c) central processing unit cycles or instructions per second. Customer's use of the Software shall also be limited by any other restrictions set forth in Customer's purchase order or in Cisco's product catalog, user documentation or web site for the Software.

2 General Limitations

Except as otherwise expressly provided under this Agreement, Customer shall have no right, and Customer specifically agrees not to:

i. transfer, except in accordance with Cisco's then current re licensing policy, assign or sublicense its license rights to any other person, or use the Software on unauthorized or secondhand Cisco equipment, and any such attempted transfer, assignment or sublicense shall be void

ii. make error corrections to or otherwise modify or adapt the Software or create derivative works based upon the Software, or to permit third parties to do the same

iii. decompile, decrypt, reverse engineer, disassemble or otherwise reduce the Software to human-readable form to gain access to trade secrets or confidential information in the Software.

To the extent required by law, at Customer's request, AT&T shall provide Customer with the interface information needed to achieve interoperability between the Software and another independently created program, on payment of AT&T's applicable fee. Customer shall observe strict obligations of confidentiality with respect to such information.

3 Upgrades and Additional Copies

For purposes of this agreement, "Software" shall include (and the terms and conditions of this agreement shall apply to) any upgrades, updates, bug fixes or modified versions (collectively, "Upgrades") or backup copies of the Software licensed or provided to Customer by Cisco or AT&T for which Customer has paid the applicable license fees.

NOTWITHSTANDING ANY OTHER PROVISION OF THIS AGREEMENT: (1) CUSTOMER HAS NO LICENSE OR RIGHT TO USE ANY SUCH ADDITIONAL COPIES OR UPGRADES UNLESS CUSTOMER, AT THE TIME OF ACQUIRING SUCH COPY OR UPGRADE, ALREADY HOLDS A VALID LICENSE TO THE ORIGINAL SOFTWARE AND HAS PAID THE APPLICABLE FEE FOR THE UPGRADE; (2) USE OF UPGRADES IS LIMITED TO CISCO EQUIPMENT FOR WHICH CUSTOMER IS

THE ORIGINAL END USER PURCHASER OR LESSEE OR WHO OTHERWISE HOLDS A VALID LICENSE TO USE THE SOFTWARE WHICH IS BEING UPGRADED; AND (3) USE OF ADDITIONAL COPIES IS LIMITED TO BACKUP PURPOSES ONLY.

4 Proprietary Notices

Customer agrees to maintain and reproduce all copyright and other proprietary notices on all copies, in any form, of the Software in the same form and manner that such copyright and other proprietary notices are included on the Software. Except as expressly authorized in this agreement, Customer shall not make any copies or duplicates or any Software without the prior written permission of Cisco. Customer may make such backup copies of the Software as may be necessary for Customer's lawful use, provided Customer affixes to such copies all copyright, confidentiality, and proprietary notices that appear on the original.

5 Protection of Information

Customer agrees that aspects of the Software and associated documentation, including the specific design and structure of individual programs, constitute trade secrets and/or copyrighted material of Cisco. Customer shall not disclose, provide, or otherwise make available such trade secrets or copyrighted material in any form to any third party without the prior written consent of Cisco. Customer shall implement reasonable security measures to protect such trade secrets and copyrighted material. Title to Software and documentation shall remain solely with Cisco.

6 Term and Termination

This License is effective until terminated. Customer may terminate this License at any time by destroying all copies of Software including any documentation. Customer's rights under this License will terminate immediately without notice from Cisco if Customer fails to comply with

any provision of this License. Upon termination, Customer must destroy all copies of Software in its possession or control.

7 Customer Records

Customer grants to Cisco and its independent accountants the right to examine Customer's books, records and accounts during Customer's normal business hours to verify compliance with this agreement. In the event such audit discloses non-compliance with this agreement, Customer shall promptly pay to Cisco the appropriate licensee fees.

8 Export

Software, including technical data, may be subject to U.S. export control laws, including the U.S. Export Administration Act and its associated regulations, and may be subject to export or import regulations in other countries. Customer agrees to comply strictly with all such regulations and acknowledges that it has the responsibility to obtain licenses to export, re-export, or import Software.

9 Restricted Rights

Cisco's commercial software and commercial computer software documentation is provided to United States Government agencies in accordance with the terms of this agreement, and per subparagraph "(c)" of the "Commercial Computer Software - Restricted Rights" clause at FAR 52.227-19 (June 1987). For DOD agencies, the restrictions set forth in the "Technical Data-Commercial Items" clause at DFARS 252.227-7015 (Nov 1995) shall also apply.

10 Limited Warranty

Cisco Systems, Inc. or the Cisco Systems, Inc. subsidiary licensing the Software, if sale is not directly by Cisco Systems, Inc. ("Cisco") warrants that commencing from the date of delivery to Customer (but in case of resale by a Cisco reseller, commencing not more than ninety (90) days after original shipment by Cisco), and continuing for a period of the longer of (a) ninety (90) days or (b) the period set forth in the Warranty Card accompanying the Product (if any): (a) the media on which the Software is furnished will be free of defects in materials and workmanship under normal use; and (b) the Software substantially conforms to its published specifications. The date of shipment of a Product by Cisco is set forth on the packaging material in which the Product is shipped. Except for the foregoing, the Software is provided AS IS. This limited warranty extends only to the Customer who is the original licensee. Customer's sole and exclusive remedy and the entire liability of Cisco and its suppliers under this limited warranty will be, at Cisco or its service center's option, repair, replacement, or refund of the Software if reported (or, upon request, returned) to the party supplying the Software to Customer, if different than Cisco. In no event does Cisco warrant that the Software is error free or that Customer will be able to operate the Software without problems or interruptions. In addition, due to the continual development of new techniques for intruding upon and attacking networks, Cisco does not warrant that the Software or any equipment, system or network on which the Software is used will be free of vulnerability to intrusion or attack.

11 Restrictions

This warranty does not apply if the Product (a) has been altered, except by Cisco, (b) has not been installed, operated, repaired, or maintained in accordance with instructions supplied by AT&T or Cisco, (c) has been subjected to abnormal physical or electrical stress, misuse, negligence, or accident; or (d) is licensed, for beta, evaluation, testing or demonstration purposes for which Cisco does not receive a payment of purchase price or license fee.

DISCLAIMER OF WARRANTY. EXCEPT AS SPECIFIED IN THIS WARRANTY, ALL

EXPRESS OR IMPLIED CONDITIONS, REPRESENTATIONS, AND WARRANTIES INCLUDING, WITHOUT LIMITATION, ANY IMPLIED WARRANTY OR CONDITION OF MERCHANTABILITY, FITNESS FOR A PARTICULAR PURPOSE, NONINFRINGEMENT, SATISFACTORY QUALITY OR ARISING FROM A COURSE OF DEALING, LAW, USAGE, OR TRADE PRACTICE, ARE HEREBY EXCLUDED TO THE EXTENT ALLOWED BY APPLICABLE LAW. TO THE EXTENT AN IMPLIED WARRANTY CANNOT BE EXCLUDED, SUCH WARRANTY IS LIMITED IN DURATION TO THE WARRANTY PERIOD. BECAUSE SOME STATES OR JURISDICTIONS DO NOT ALLOW LIMITATIONS ON HOW LONG AN IMPLIED WARRANTY LASTS, THE ABOVE LIMITATION MAY NOT APPLY TO YOU. THIS WARRANTY GIVES YOU SPECIFIC LEGAL RIGHTS, AND YOU MAY ALSO HAVE OTHER RIGHTS WHICH VARY FROM JURISDICTION TO JURISDICTION. This disclaimer and exclusion shall apply even if the express warranty set forth above fails of its essential purpose.

12 General Terms Applicable to the Limited Warranty Statement and Software License

12.1 Disclaimer of Liabilities

IN NO EVENT WILL CISCO OR ITS SUPPLIERS BE LIABLE FOR ANY LOST REVENUE, PROFIT, OR DATA, OR FOR SPECIAL, INDIRECT, CONSEQUENTIAL, INCIDENTAL, OR PUNITIVE DAMAGES HOWEVER CAUSED AND REGARDLESS OF THE THEORY OF LIABILITY

ARISING OUT OF THE USE OF OR INABILITY TO USE SOFTWARE EVEN IF CISCO OR ITS SUPPLIERS HAVE BEEN ADVISED OF THE POSSIBILITY OF SUCH DAMAGES. In no event shall Cisco's or its suppliers' liability to Customer, whether in contract, tort (including negligence), or otherwise, exceed the price paid by Customer. The foregoing limitations shall apply even if the above-stated warranty fails of its essential purpose. BECAUSE SOME STATES OR JURISDICTIONS DO NOT ALLOW LIMITATION OR EXCLUSION OF CONSEQUENTIAL OR INCIDENTAL DAMAGES, THE ABOVE LIMITATION MAY NOT APPLY TO YOU.

The Warranty and the Software License shall be governed by and construed in accordance with the laws of the State of California, without reference to principles of conflict of laws, provided that for Customers located in a member state of the European Union, Norway or Switzerland, English law shall apply. The United Nations Convention on the International Sale of Goods shall not apply. If any portion hereof is found to be void or unenforceable, the remaining provisions of the Warranty and the Software License shall remain in full force and effect. Except as expressly provided herein, the Software License constitutes the entire agreement between the parties with respect to the license of the Software and supersedes any conflicting or additional terms contained in the purchase order.